Product Specification(v1.3)

Cilent	High Great (GJCX)
Name	Amigo Wireless Remote Control
Model	HG-C01B
Approve	Vincent Ren
Data	2017-06-07

Commitment and Others:

- [√] Plane dimensions-photo
- [√] Appearance and brief description-photo
- [√] Electrical parameters

Signature			Recognition Signature		
Approved	Review	Production	Approved	Review	Production

Plane Dimensions

6

Appearance and Brief Description

[1] Antenna
[2] Retractable bracket
[3] Third gear mode switch
[4] Assembly seat
[5] Rings
[6] Remote control power indicator
[7] Return key
[8] Emergency stop key
[9] Antenna
[10] Mobile phone bracket mechanical button
[11] Assembly seat
[12] Aircraft power indicator
[13] A key to take off and land
[14] Handle
[15] Micro USB
[16] Take pictures
[17] Roller
[18] USB Type A female base
[19] Video key
[20] Roller
[21] Signal transfer module
[22] switch

Number of Channel:	3
Suitable for Models:	Fixed Wing
Frequency Range:	5.745GHz-5.810GHz
Band Width:	1MHz
Number of Band:	1
TX Power:	Less than 12dBm
5.8G Method:	Second generation enhanced version of automatic frequency hopping digital system
Encoding:	GFSK
Channel Resolution:	1024 Step
Low Voltage Alarm:	Yes
Data Output:	USB
Charging Interface:	Yes
Antenna length:	/
Weight:	658g
DC Input:	3.3-4.2V
Display Method:	LED
Online Upgrade:	Yes
Open ground without interference:	More than 300 meters
Current(TX on):	300mA (Typical)
Channel Data	middle: 1024±40us, range: 341----1706±40us
Channel Delay (arm 15ms/PDK ≦30ms)	Less than 15ms
RX model:	GJCX-MA12
Dimensions:	182mm*89mm*296mm
Appearance color:	White and black
Certification:	CE, FCC

ShenZhen HighGreat Co., Ltd

1. Overview

The 2.4G RF module is designed for drone Amigo plane end, RF link is based on AR9331.

2. Module Hardware Overview

2.1 Block Diagram

The general Hardware architecture is shown below Figure:

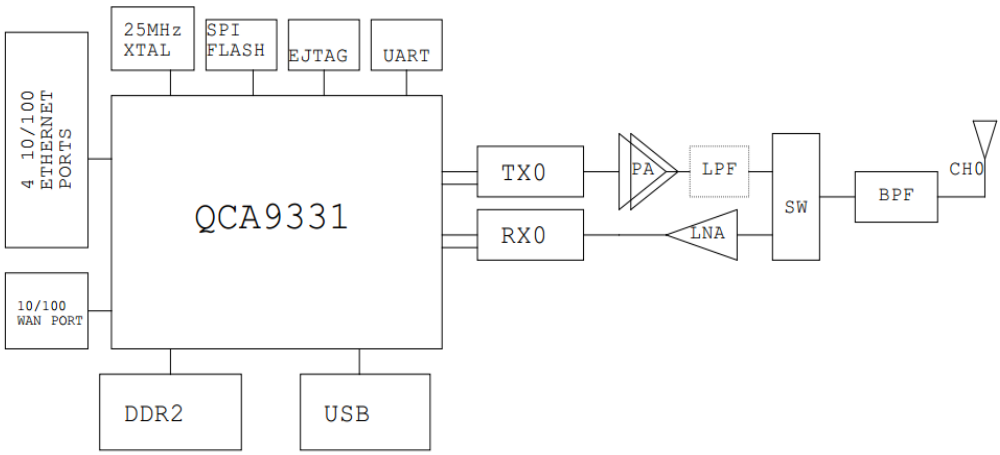

2.2 Feature

- Support 2.4G frequency band : 2.4GHz-2.4835GHz
- Support UART and SPI interface, High and Full Speeds supported
- Module is powered by the host with 3.3V-5.5V direct current power supply

2.3 Interface

◆ Interface

- Interface: Half Hole
- Antenna: IPEX connector

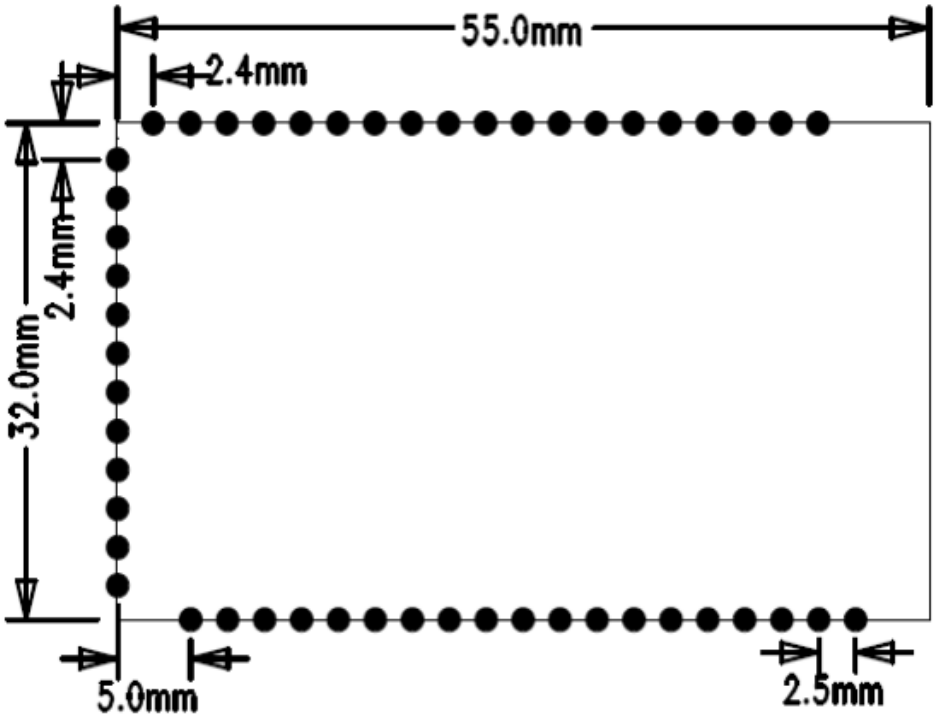

From Module Bottom View

Pin Number	Symbol Name	Status	Pin Description
1	GND	Input	RF Ground
2	GND		RF Ground
3	+5V		PA Source
4	+5V		PA Source
5	GND		Power Ground
6	GND		Power Ground
7	GPIO5		
8	GND		Power Ground
9	GPIO17		
10	GPIO16		
11	GPIO15		
12	GPIO14		
13	GPIO13		
14	GPIO1		
15	GPIO0		
16	0_RXD	Input	UART
17	0_TXD	Output	UART
18	GND		
19	GND		
20	GPIO23		WIFI Reset Pin
21	GPIO20		
22	GPIO19		
23	GPIO18		
24	GPIO22		WIFI Indicator LED
25	GPIO21		
26	WAN_RX+		
27	WAN_RX-		
28	WAN_TX+		
29	WAN_TX-		
30	LAN_RX+		
31	LAN_RX-		
32	LAN_TX+		
33	LAN_TX-		
34	2.0V_OUT		2.0V Voltage Output
35	GPIO12		
36	GND		
37	VDD_3.3_IN1		Voltage Input
38	VDD_3.3_IN1		Voltage Input
39	GDN		
40	USB-		USB Negative
41	USB-		USB Positive
42	GND		
43	GPIO26		
44	GPIO27		
45	GPIO11		
46	SPI_CLK		
47	SPI_CS		
48	SPI_DI		
49	SPI_DO		
50	GND		RF Ground

3. Technical Parameter

Power Supply	3.3V-5.5V
Frequence Range	2400-2483.5MHz
Modulate	DSSS/ CCK/OFDM
TX Power	23dBm
Horizontal Distance	150m
Current(TX on max power)	650mA

Warning Statement

This device complies with part 15 of the FCC Rules. Operation is subject to the following two conditions: (1) This device may not cause harmful interference, and (2) this device must accept any interference received, including interference that may cause undesired operation.

Any Changes or modifications not expressly approved by the party responsible for compliance could void the user's authority to operate the equipment.

Note: This equipment has been tested and found to comply with the limits for a Class B digital device, pursuant to part 15 of the FCC Rules. These limits are designed to provide reasonable protection against harmful interference in a residential installation. This equipment generates uses and can radiate radio frequency energy and, if not installed and used in accordance with the instructions, may cause harmful interference to radio communications. However, there is no guarantee that interference will not occur in a particular installation. If this equipment does cause harmful interference to radio or television reception, which can be determined by turning the equipment off and on, the user is encouraged to try to correct the interference by one or more of the following measures:
-Reorient or relocate the receiving antenna.
-Increase the separation between the equipment and receiver.
-Connect the equipment into an outlet on a circuit different from that to which the receiver is connected.
-Consult the dealer or an experienced radio/TV technician for help.

The device has been evaluated to meet general RF exposure requirement. The device can be used in portable exposure condition without restriction.