CCL ELECTRONICS LTD

WI-FI weather station with 7-In-1 professional sensor
Model: C6075A
User Manual

ABOUT THIS USER'S MANUAL

⚠ This symbol represents a warning. To ensure safe use, always adhere to the instructions described in this documentation.

This symbol is followed by a user's tip.

PRECAUTIONS

- Keep and reading the "User manual" is highly recommended. The manufacturer and supplier cannot accept any responsibility for any incorrect readings, export data lost and any consequences that occur should an inaccurate reading take place.
- This product is designed for use in the home only as indication of weather conditions. This product is not to be used for medical purposes or for public information
- Do not subject the unit to excessive force, shock, dust, temperature or humidity.
- Do not cover the ventilation holes with any items such as newspapers, curtains etc.
- Do not immerse the unit in water. If you spill liquid over it, dry it immediately with a soft, lint-free cloth.
- Do not clean the unit with abrasive or corrosive materials.
- Do not tamper with the unit's internal components. This invalidates the warranty.
- Placement of this product on certain types of wood may result in damage to its finishing for which manufacturer will not be responsible. Consult the furniture manufacturer's care instructions for information.
- Only use fresh batteries. Do not mix new and old batteries.
- Only use attachments / accessories specified by the manufacturer.
- Images shown in this manual may differ from the actual display.
- When disposing of this product, ensure it is collected separately for special treatment.
- Dispose of used batteries according to the instructions.
- CAUTION! risk of explosion if battery is replaced by an incorrect type.
- The socket-outlet shall be installed near the equipment and easily be accessible.
- The contents of this manual may not be reproduced without the permission of the manufacturer.
- Technical specifications and user manual contents for this product are subject to change without notice.
- When replacement parts are required, be sure the service technician uses replacement parts specified by the manufacturer that have the same characteristics as the original parts. Unauthorized substitutions may result in fire, electric shock, or other hazards.
- This product is not a toy. Keep out of the reach of children.
- The console is intended to be used only indoors.
- Place the console at least 20cm from nearby persons.
- The console shall be used with the adaptor with manufacturer's name Hua Xu Electronics Factory with model no.: HX075-0501000-AG-001 or HX075-0501000-AX only.
- This device is only suitable for mounting at height < 2m.

TABLE OF CONTENTS

INTRODUCTION . . . 1

OVERVIEW . . . 1
- CONSOLE. . . . 1
- LCD DISPLAY . . . 2
- WIRELESS INDOOR HYGRO-THERMO SENSOR . . . 2
- WIRELESS 7-IN-1 SENSOR . . . 3

INSTALLATION AND SETUP . . . 4
- INSTALL WIRELESS 7-IN-1 SENSOR . . . 4
- INSTALL WIRELESS INDOOR SENSOR. . . . 4
- SETUP THE CONSOLE . . . 5
- SYNCHRONIZING ADDITIONAL WIRELESS SENSOR(S) (OPTIONAL) . . . 6
- POINTING THE WIRELESS 7-IN-1 SENSOR TO SOUTH . . . 6

CREATE WEATHER SERVER ACCOUNT & SETUP WI-FI CONNECTION . . . 6
- CREATE WEATHER UNDERGROUND ACCOUNT . . . 6
- CREATE WEATHERCLOUD ACCOUNT . . . 8
- SETUP WI-FI CONNECTION . . . 9
- SETUP THE WEATHER SERVER CONNECTION . . . 10
- ADVANCE SETTING IN WEB INTERFACE . . . 11
- VIEW YOUR WEATHER DATA IN WUNDERGROUND . . . 12
- VIEW YOUR WEATHER DATA IN WEATHERCLOUD . . . 12
- FIRMWARE UPDATE . . . 13

OTHER SETTING & FUNCTIONS OF THE CONSOLE . . . 13
- MANUAL CLOCK SETTING . . . 13
- MOON PHASE . . . 14
- SUNRISE & SUNSET TIME. . . . 14
- SETTING ALARM TIME. . . . 14
- ACTIVATING ALARM AND TEMPERATURE PRE-ALARM FUNCTION . . . 15
- TEMPERATURE / HUMIDITY FUNCTION . . . 15
- TREND INDICATOR . . . 16
- WIND . . . 16
- WEATHER INDEX . . . 17
- WEATHER FORECAST . . . 18
- BAROMETRIC PRESSURE . . . 19
- RAIN. . . . 19
- LIGHT INTENSITY, UV INDEX & SUNBURN TIME. . . . 20
- MAX / MIN DATA RECORD . . . 20
- PAST 24 HOURS HISTORY DATA . . . 21
- WEATHER ALERT SETTING . . . 21
- BACKLIGHT. . . . 22
- DISPLAY CONTRAST. . . . 22

MAINTENANCE . . . 22
- BATTERY REPLACEMENT. . . . 22
- WIRELESS 7-IN-1 SENSOR MAINTNANCE . . . 23
- TROUBLESHOOT . . . 23

SPECIFICATION . . . 24
- CONSOLE. . . . 24
- WIRELESS 7-IN-1 SENSOR . . . 26
- WIRELESS THERMO-HYGRO INDOOR SENSOR . . . 27

INTRODUCTION

Thank you for selecting WI-FI weather station with 7-in-1 professional sensor. This system gathers and automatically uploads accurate and detail weather data to Weather Underground and Weathercloud website - the famous weather service which allows weather observers to upload their local weather data with automated personal weather stations (PWS) - at which you can access and upload your weather data freely. This product offers professional weather observers or serious weather enthusiasts robust performance with a wide range of options and sensors. You will get your own local forecast, high/lows, totals and averages for virtually all weather variables without using a PC.

The 7-in-1 sensor which measures outdoor temperature, humidity, wind, rain UV and Light together with up to 7 individual temperature humidty sensors, which can add to a sensor array of maximum 7 units continually, transmits weather data to the console. Both sensors are fully assembled and calibrated for your easy installation. They send data at a low power radio frequency to the console from up to 150m/450 feet away (line of sight).

In the console, high-speed processors are embedded to analyze the received weather data and these real-time data can be published to *Wunderground.com* and *weathercloud.net* through your home Wi-fi router. The console can also synchronize with internet time server to show high precision time and for its weather data time stamp. The color LCD display shows informative weather readings with advanced features, such as high/low alert alarm, different weather index, and MAX/MIN records. With calibration, sunrise / sunset and moon phase features, this system is truly a remarkably personal yet professional weather station for your own backyard.

NOTE:

This instruction manual contains useful information on the proper use and care of this product. Please read this manual through to fully understand and enjoy its features, and keep it handy for future use.

OVERVIEW

CONSOLE

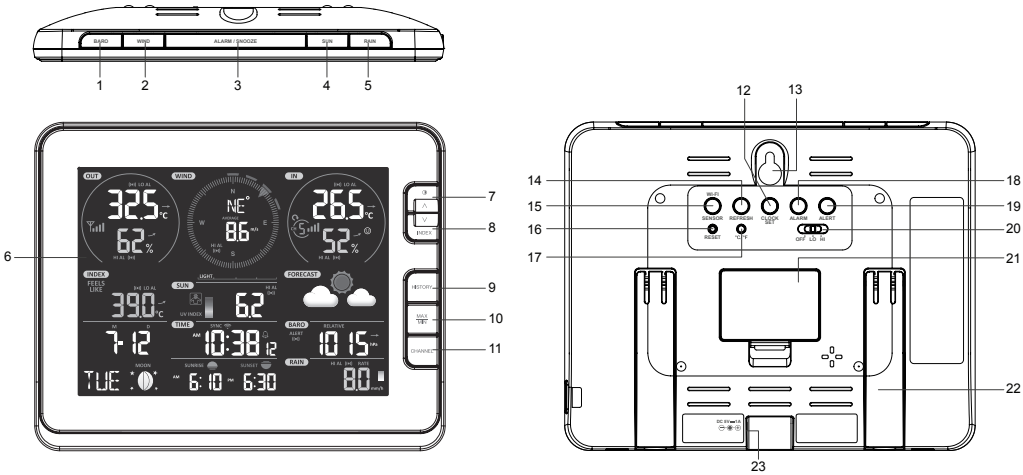

1. **[BARO]** key
2. **[WIND]** key
3. **[ALARM/SNOOZE]** key
4. **[SUN]** key
5. **[RAIN]** key
6. LCD display
7. **[◑ / ∧]** key
8. **[INDEX / ∨]** key
9. **[HISTORY]** key
10. **[MAX / MIN]** key
11. **[CHANNEL]** key
12. **[CLOCK SET]** key
13. Wall mounting holder
14. **[REFRESH]** key
15. **[SENSOR / WI-FI]** key
16. **[RESET]** key
17. **[°C / °F]** key
18. **[ALARM]** key
19. **[ALERT]** key
20. **[OFF / HI / LO]** slide switch
21. Battery door
22. Table stand
23. Power jack

LCD DISPLAY

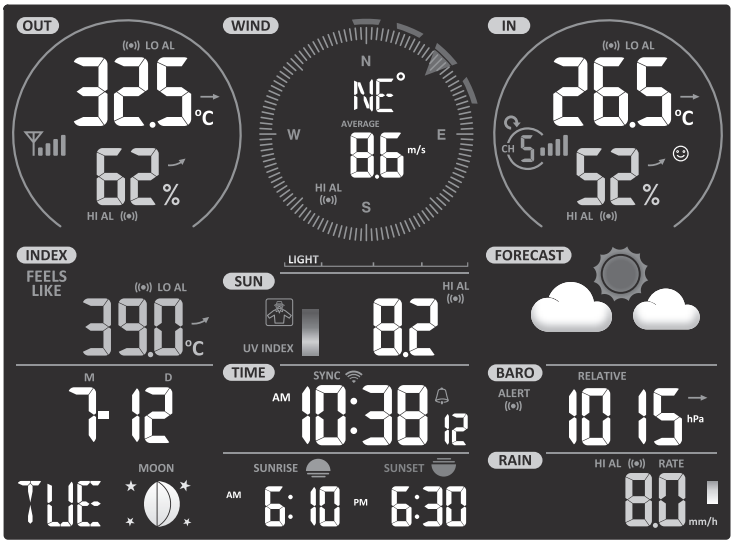

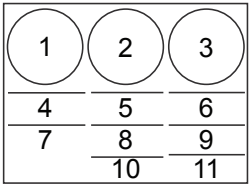

Display section:

1. Outdoor temperature & humidity
2. Wind direction & speed
3. Indoor (Ch) temperature & humidity
4. Weather index
5. UV index & light intensity (SUN)
6. Weather forecast
7. Calendar & moon phase
8. Time / alarm
9. Barometer
10. Sunrise & sunset time
11. Rainfall & Rain rate

WIRELESS INDOOR HYGRO-THERMO SENSOR

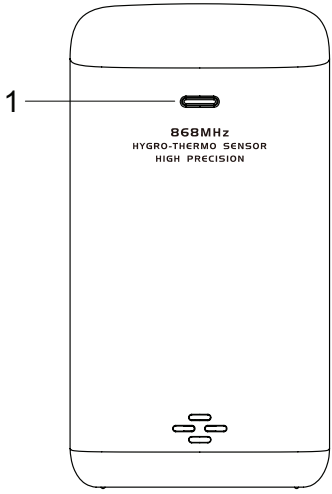

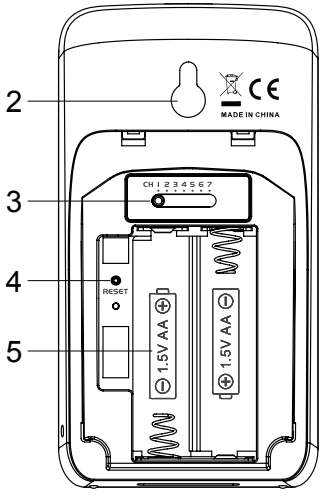

1. Transmission status LED
2. Wall mounting holder
3. Channel slide switch
4. **[RESET]** key
5. Battery compartment

WIRELESS 7-IN-1 SENSOR

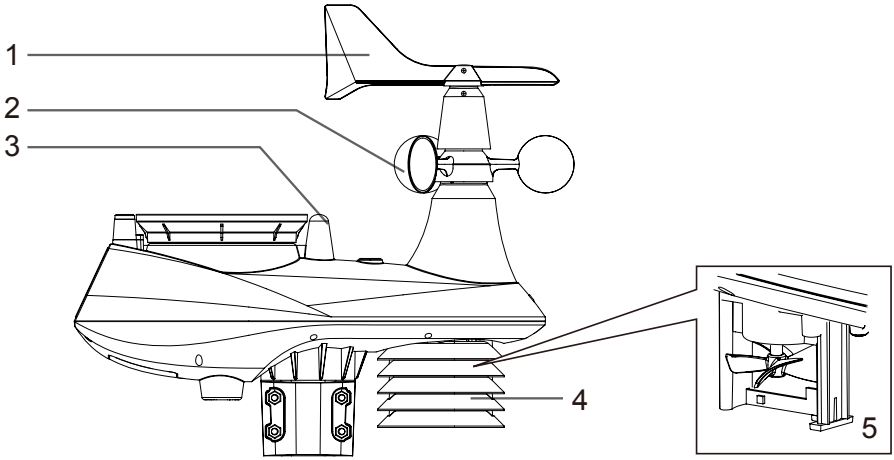

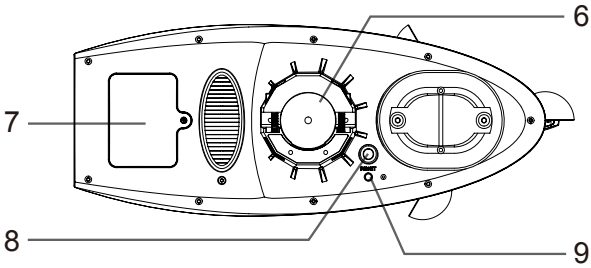

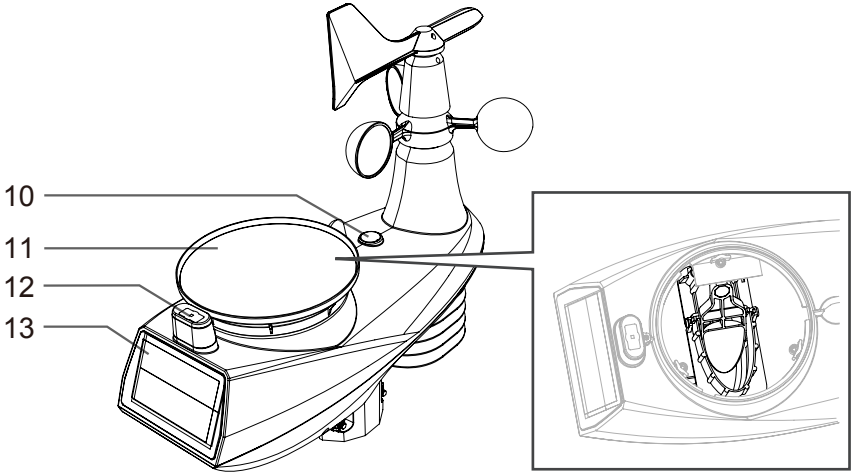

1. Wind vane
2. Wind cups
3. Antenna
4. Radiation shield
5. Thermo-hygro sensor
6. Mounting parts (fit for 35 ~40mm diameter pole)
7. Battery door
8. **[RESET]** key
9. Transmission status LED
10. Bubble level gradienter
11. Rain collector
12. UV / light sensor
13. Solar panel

INSTALLATION AND SETUP

Your console can pair up with one wireless 7-in-1 outdoor sensor and up to 7 wireless indoor sensors. (1pc wireless indoor sensor included)

INSTALL WIRELESS 7-IN-1 SENSOR

Your wireless 7-IN-1 sensor measures wind-speed, wind-direction, rainfall, UV, light intensity, temperature and humidity for you. It's assembled and calibrated for your easy installation.

INSTALL BATTERIES

Unscrew the battery door at bottom of unit and insert the batteries according to the +/- polarity indicated. Screw the battery door compartment on tightly.

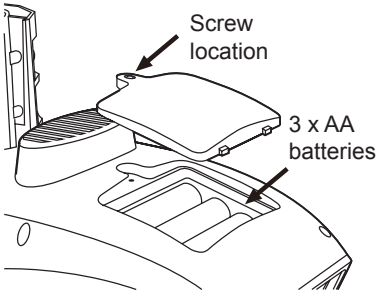

NOTE:

- Ensure the water tight O-ring is properly aligned in place to ensure water resistant.
- The red LED will begin flashing every 12 seconds.

MOUNTING POLE AND DIRECTION ALIGNMENT

Install the wireless 7-IN-1 sensor in an open location with no obstructions above and around the sensor for accurate rain and wind measurement. Install the sensor with the smaller end facing the North to properly orient the wind direction vane. Secure the mounting stand and bracket (included) to a 35 ~ 40mm diameter steel post or pole, and allow minimum 2m off the ground.

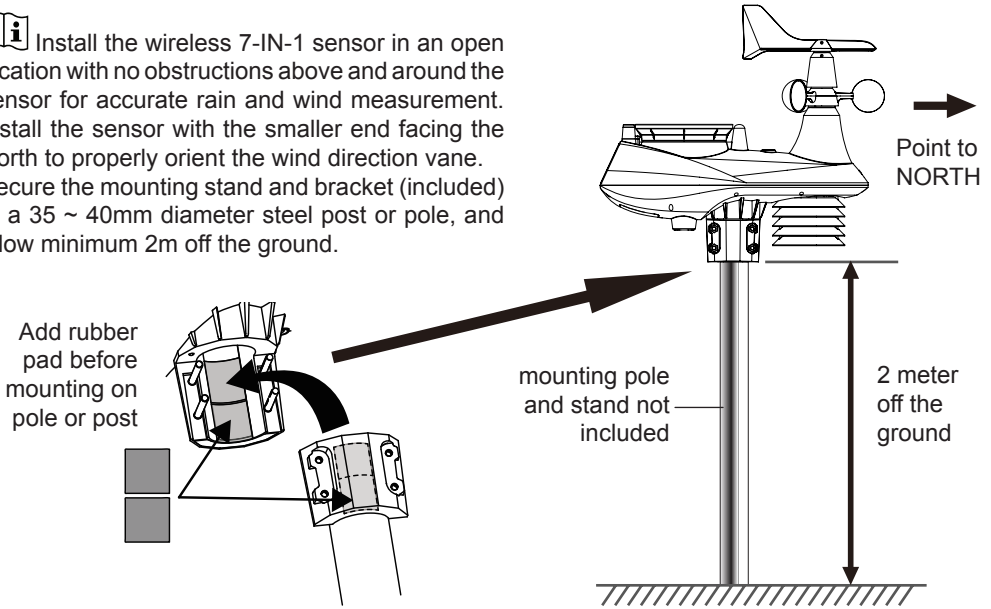

INSTALL WIRELESS INDOOR SENSOR

1. Remove the battery door of the sensor.
2. Use the channel slide switch to set the channel number for the sensor (e.g. Channel 1)
3. Insert 2 x AA size batteries into the battery compartment and close the battery door according to the polarity information marked on the battery compartment.
4. The sensor is in synchronization mode, and can be registered to the console within the next few minutes. The transmission status LED will begin to flash every 1 minute.

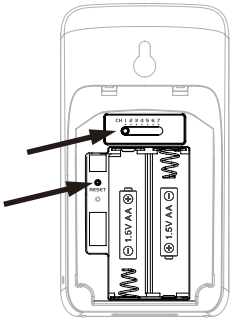

NOTE:

- If you need to re-assign the sensor channel, slide the channel slide switch to the new channel position. For the new channel number to be effective, press **[RESET]** key on the sensor.
- Avoid placing the sensors in direct sunlight, rain or snow.
- To avoid the sensor/s and console pairing failure during new console setup, please power up the sensor/s first, and then press **[RESET]** key on the main unit (no need on sensors).

PLACING THE WIRELESS INDOOR SENSOR

Place a screw on the wall that you wish to hang the sensor on. Hang the sensor onto the screw by the wall mounting holder. You can also place the sensor on a table by itself.

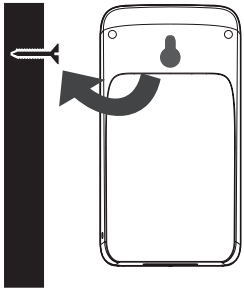

SETUP THE CONSOLE

POWER UP THE CONSOLE

1. Plug the adapter provided to the power jack at the back of the console.
2. Once the console is turned on, all the segments of the LCD will be shown momentarily.
3. The console will automatically enters sensor synchronization mode and AP mode (refer to **SETUP WI-FI CONNECTION**).

NOTE:

If no display appears on the LCD after you plug the adaptor, press **[RESET]** key by using a pointed object.

SYNCHRONIZING WIRELESS 7-IN-1 SENSOR AND INDOOR SENSOR(S)

Immediately after power up, while still in Synchronization mode, the 7-in-1 sensor and Indoor Sensor can be paired to the console automatically. Once your sensors are paired up, the sensors' signal strength indicator and weather reading will appear on your console display.

BACKUP BATTERY

Backup batteries are used to keep time-sensitive information on the console's memory during power failure. These include:

- *Time & Date, Alarm Time, Max/Min & Past 24 hours weather records, Alert setting values, Sensor(s) channel history, and Units*

1. Remove the battery door of the console.
2. Insert 3 new AAA batteries as per the polarity indicated,
3. Replace the battery door.

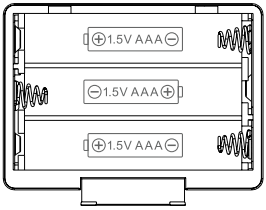

BUILT-IN MEMORY

The console has built-in FLASH memory that holds the vital settings. These include:

- *Time Zone, DST status, Time SYNC status, WI-FI and Weather server setting, Latitude / Longitude, Hemisphere setting, Calibration values, and Sensor ID of paired sensor(s)*

RESET AND FACTORY HARD RESET

To reset the console and start again, press the **[RESET]** key once. To hard reset the console and resume factory settings, press and hold the **[RESET]** key for 6 seconds

RESYNCHRONIZE SENSORS

Press the **[SENSOR / WI-FI]** key once for the console to enter sensor Synchronization mode, and the console will re-register all the sensors that have already been registered to the it before. i.e. the console will not lose the connection of the sensors that you'd paired up before.

CHANGING BATTERIES AND MANUAL PAIRING OF SENSOR

Whenever you changed the batteries of the wireless indoor or 7-in-1 weather sensor, re-synchronization must be done manually.

1. Change all the batteries to new ones in the sensor.
2. Press **[SENSOR / WI-FI]** key on the console to enter sensor synchronization mode.
3. Press **[RESET]** key on the wireless indoor or 7-in-1 weather sensor.

SYNCHRONIZING ADDITIONAL WIRELESS SENSOR(S) (OPTIONAL)

The console can support up to 7 additional wireless sensors.

1. Press the **[SENSOR / WI-FI]** key once on the console to enter synchronization mode.
2. Press the **[RESET]** key on the new sensor, and wait for a few minutes for the new sensor to paired to the console.

NOTE:

- Channel number of the indoor sensor must not be duplicated among the sensors. Please refer to "**INSTALL WIRELESS INDOOR SENSOR**" for details
- This console can support different type of additional wireless sensor, e.g. soil moisture and pool sensor. If you would like to pair up additional sensors, please check with your retailer for more detail.

POINTING THE WIRELESS 7-IN-1 SENSOR TO SOUTH

The outdoor 7-IN-1 sensor is calibrated to point to North for the maximum accuracy. However, for the user's convenience (e.g. users in the Southern hemisphere), it is possible to use the sensor with the wind vane pointing to South.

1. Install the 7-IN-1 wireless sensor with its wind meter end pointing to South. (Please refer to **INSTALLATION OF THE WIRELESS SENSOR** section for mounting details)
2. Select "S' in hemisphere section of the setup UI setup page. (Please refer to **SETUP THE WEATHER SERVER CONNECTION** section for setup details)
3. Press Apply icon to confirm and exit.

NOTE:

Changing the hemisphere setting will automatically switch the direction of the moon phase on the display.

CREATE WEATHER SERVER ACCOUNT & SETUP WI-FI CONNECTION

The console can upload weather data to WUnderground and / or Weathercloud through WI-FI router, you can follow the step below to setup your device.

NOTE:

The Weather Underground and Weathercloud website are subjected to change without notice.

CREATE WEATHER UNDERGROUND ACCOUNT

1. In *https://www.wunderground.com* click the "**Join**" on the top right corner to open the registration page. Follow the instructions to create your account.

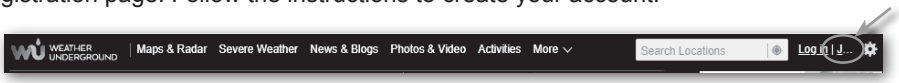

NOTE:

Use the valid email address to register your account.

2. After you have created your account and completed the Email validation, please go back to the WUndergound web page to login. Then, click “*My Profile*” button on the top to open the drop-down menu and click **"My Weather Station"**.

3. In "My Weather Station" page bottom, press the "Add New Device" button to add your device.
4. Follow their instruction to enter your station information, in the Step "Tell Us More About Your Device", (1) enter a Name for your weather station. (2) choose “**Other**” in “**Device Hardware**” section and fill in other the other information (3) select "**I Accept**" to accept Weather underground's privacy terms, (4) click “**Next**” to create your station ID and key.

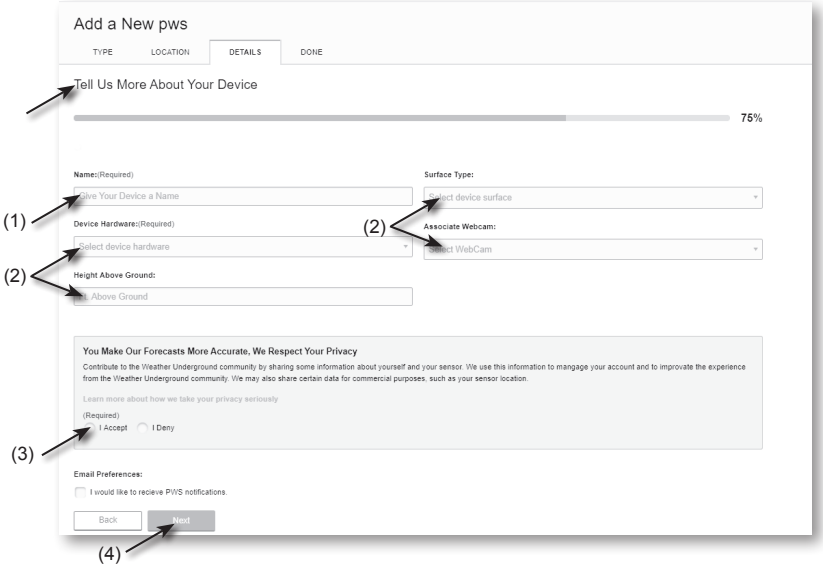

5. Jot down Your "Station ID" and "Station key" for the further setup step.

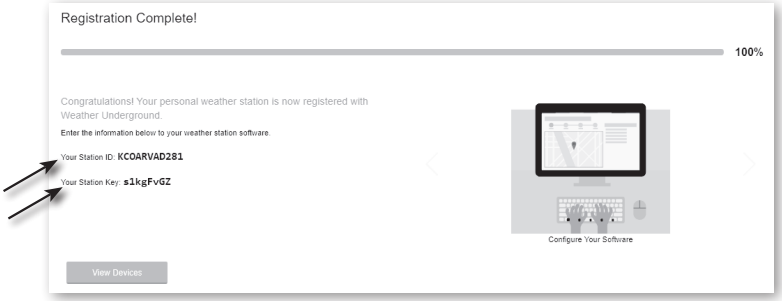

CREATE WEATHERCLOUD ACCOUNT

1. In *https://weathercloud.net* enter your information in "**Join us today**" section, then follow the instructions to create your account.

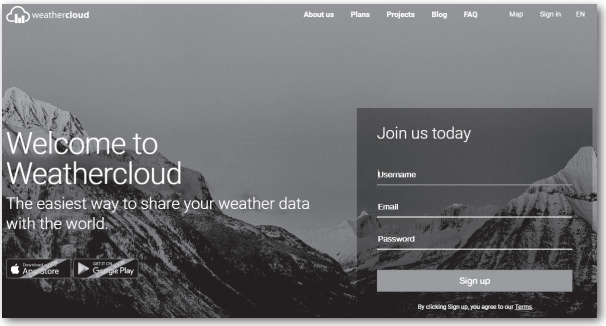

NOTE:
Use the valid email address to register your account.

2. Sign in weathercloud and then you will go the "Devices" page, click "+ New" to create new device.

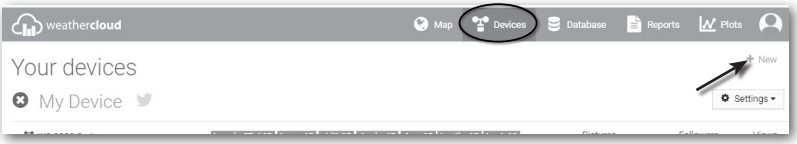

3. Enter all the information in **Create new device** page, for the **Model*** selection box select the "**W100 Series**" under "**CCL**" section. for the Link type* selection box select the "SETTINGS", Once you have completed, click **Create**.

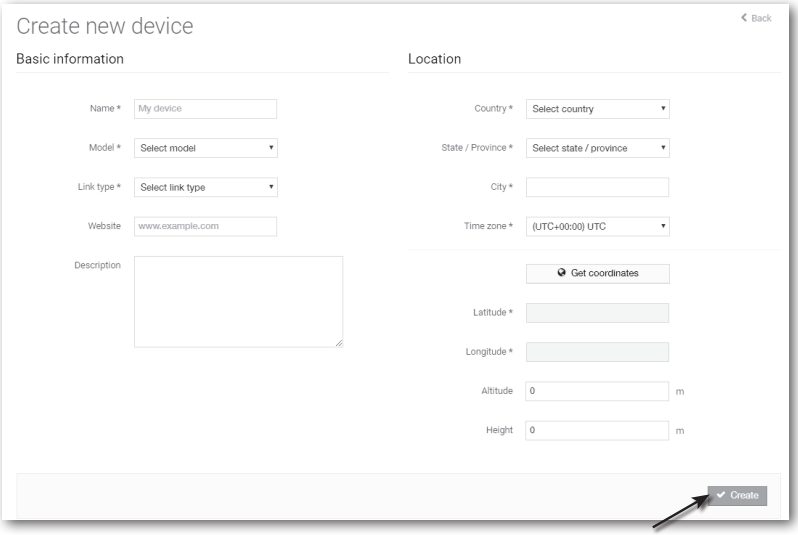

4. Jot down your ID and key for the further setup step.

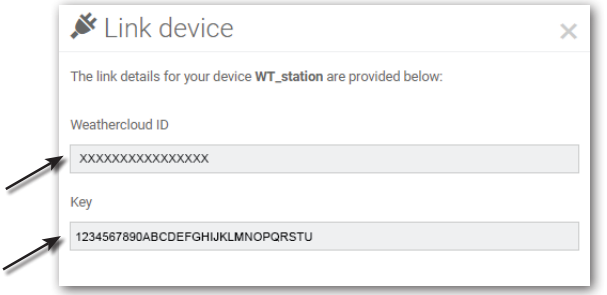

SETUP WI-FI CONNECTION

1. When you power up the console for the first time, the console LCD will show flashing "AP" and " ᯤ " icon to signify that it has entered AP (Access Point) mode, and is ready for WI-FI settings. User can also press and hold the **[SENSOR / WI-FI]** key for 6 seconds to enter AP mode manually.
2. Use the smart phone, tablet, or computer to connect the console through WI-FI.
3. In PC choose WiFi network settings or In Android / iOS choose setting ➔ WI-FI to select the console's SSID: *PWS-XXXXXX* in the list and it will need several second to connect.

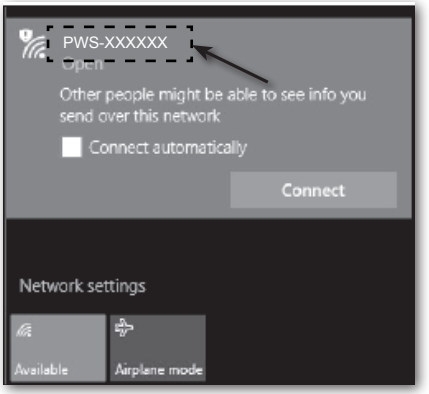

PC (Windows 10) WI-FI network interface

Android WI-FI network interface

4. Once connected, enter the following IP address into your internet browser's address bar, to access the console's web interface:

http://192.168.1.1

NOTE :

- Some browsers will treat **192.168.1.1** as a search, so make sure you include **http://** header.
- Recommended browsers, such as the latest version of Chrome, Safari, Edge, Firefox or Opera.
- WI-FI network interface of PC or mobile subject to change.

WI-FI CONNECTION STATUS

Below is the WI-FI icon status on the console LCD:

Stable: Console is in connection with WI-FI router	Flashing: Console is trying to connect to WI-FI router	Flashing: Console currently in Access Point (AP) mode

SETUP THE WEATHER SERVER CONNECTION

Enter the following information into the below web interface "SETUP" page to connect the console to weather server, If you do not want to use *Wunderground.com* or *Weathercloud.net*, please empty the station ID & key to ignore the data upload.

SETUP page

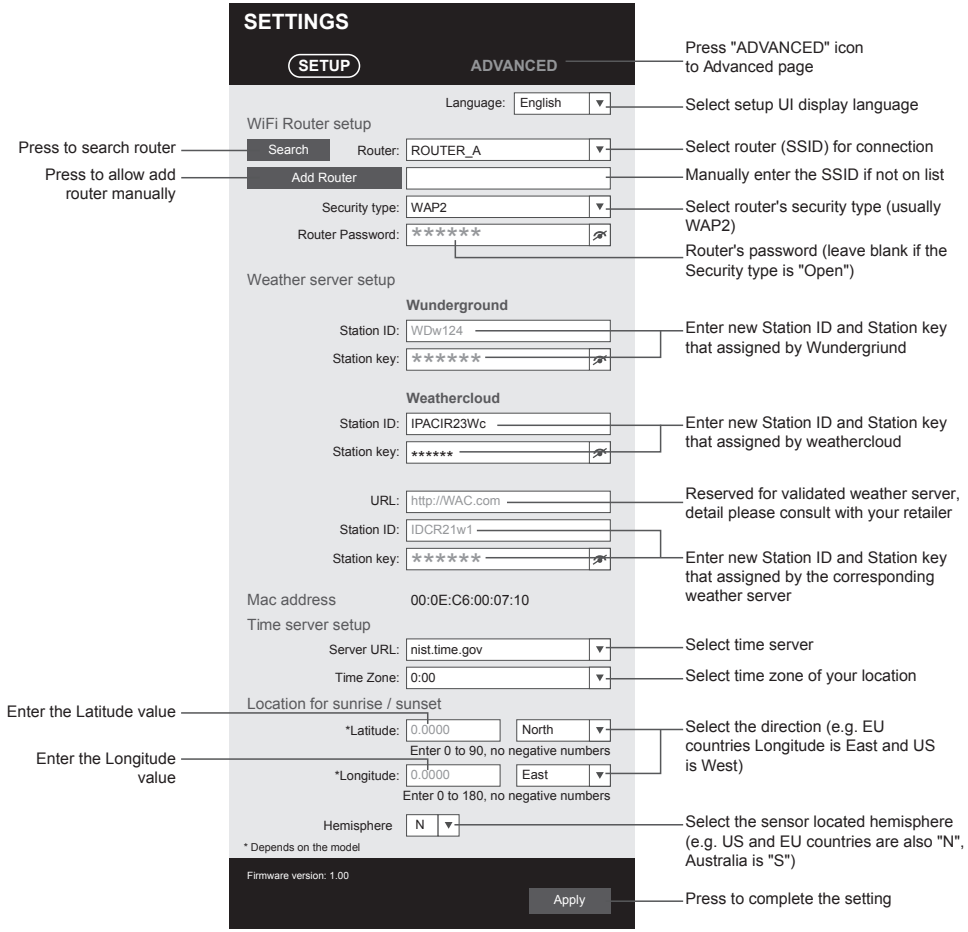

NOTE:

- When WI-FI setup is completed, your PC or mobile will resume your default WI-FI connection.
- During AP mode, you can press and hold the **[SENSOR / WI-FI]** key for 6 seconds to stop AP mode and the console will restore your previous setting.

TIME ZONE

To automtically set the time display to your time-zone, change the time zone in SETUP page of previous section from '0:00' (default) to your time zone (e.g.+1:00 for Germany).

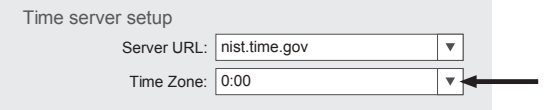

TIME SERVER CONNECTION STATUS

After the console has connected to the internet, it will attempt to connect to the internet time server to obtain the UTC time. Once the connection succeeds and the console's time has been updated, the " **SYNC** " icon will appear on the LCD.

The time will automatically synchronize Internet time server at 12:00AM and 12:00PM per day. Also you can press the **[REFRESH]** key to get the internet time manually within 1 minute.

ADVANCE SETTING IN WEB INTERFACE

Press **"ADVANCED"** key at the top of web interface to enter the advance setting page, this page allow you to set and view the calibration data of the console, as well as update the firmware version on PC web browser.

ADVANCED page

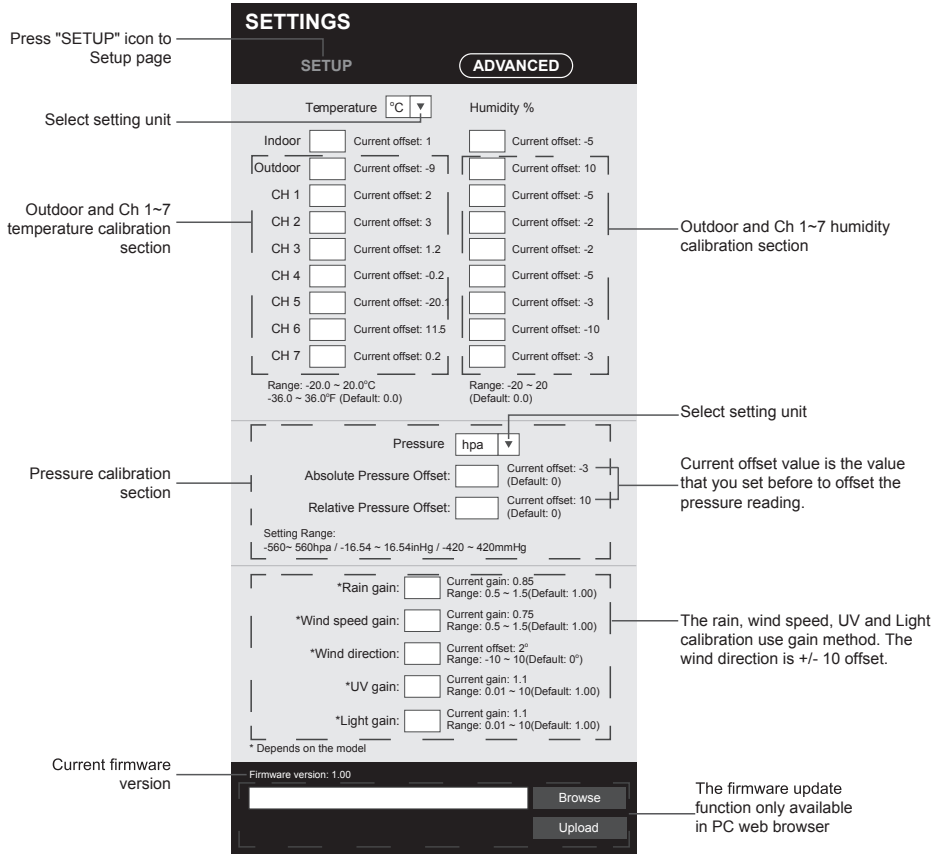

CALIBRATION

1. User can input the offset and/or gain values for different parameters while current offset and gain values are shown next to their corresponding blank.
2. Once completed, press Apply at the bottom of the SETUP page

The current offset value will show the previous value that you entered, please input the new value in the blank if any changes needed, the new value will effective once you press Apply icon in SETUP page.

NOTE:

- Calibration of most parameter is not required, with the exception of Relative Pressure, which must be calibrated to sea-level to account for altitude effects.
- Indoor temperature and humidity calibration values are not applicable for this console.

VIEW YOUR WEATHER DATA IN WUNDERGROUND

To view your weather station live data in a web browser (PC or mobile version), please visit *http://www.wunderground.com*, and then enter your "Station ID" in the searching box. Your weather data will show up on the next page. You can also login your account to view and download the recorded data of your weather station.

Another way to view your station is use the web browser URL bar, type below in the URL bar:

https://www.wundergound.com/dashboard/pws/XXXX

Then replace the XXXX by your Weather underground station ID to view your station live data.

You can also check Weather Underground web site to learn more about their mobile App for Android and iOS.

VIEWING YOUR WEATHER DATA IN WEATHERCLOUD

1. To view your weather station live data in a web browser (PC or mobile version), please visit https://weathercloud.net and sign in your own account.
2. Click the View icon inside the Settings pull down menu of your station.

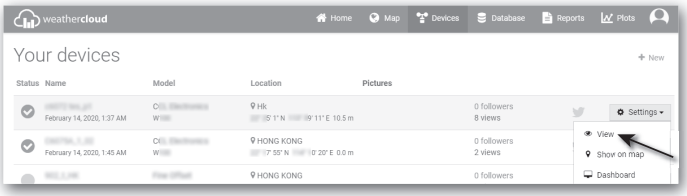

3. Click "**Current**", "**Wind**", "**Evolution**" or "**Inside**" icon to view the live data of your weather station.

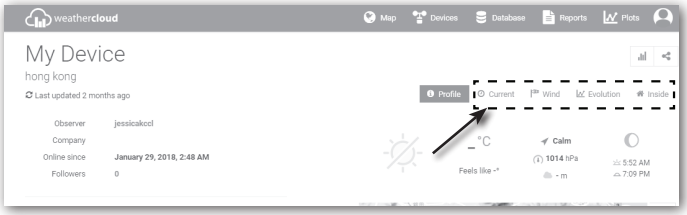

FIRMWARE UPDATE

The console supports OTA firmware update capability. Its firmware may be updated over the air anytime (whenever necessary) through any web-browser on a PC with WI-FI connectivity. Update function, however, is not available through mobile/smart devices.

FIRMWARE UPDATE STEP

1. Download the latest version firmware to your PC.
2. Set the Console into AP (access point) mode then connect the PC to the console (ref to "SETUP WI-FI CONNECTION" section in previous page).
3. Click the Browse in firmware update section and browse the location of the file you download in step 1. To update the WI-FI firmware, click the Browse in WI-FI firmware section.
4. Click the corresponding Upload to start transfer the firmware file to console.
5. In the meantime, the console will execute the update automatically and will show the update progress on display (i.e. 100 is completion).

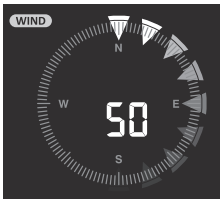

The update time is around 5 ~ 8 minutes

6. The console will restart once the update is completed.
7. The console will stay in **AP mode** for you to check the firmware version and all the current setting.

IMPORTANT NOTE:

- Please keep connecting the power during the firmware update process.
- Please make sure your PC's WI-FI connection is stable.
- When the update process start, do not operate the PC and console until the update finished.
- During firmware update the console will stop upload data to the cloud server. It will reconnect to your WI-FI router and upload the data again once the firmware update succeed. If the console cannot connect to your router, please enter the SETUP page to setup again.
- After the firmware updates, user might need to input the Weather Underground ID and password again.
- Firmware update process have potectial risk, which cannot guarantee 100% success. If the update fail, please redo the above step to update again.

OTHER SETTING & FUNCTIONS OF THE CONSOLE

MANUAL CLOCK SETTING

This console is designed to obtain the UTC time by synchronize with the assigned internet time server. If you want to use it offline, you can set the time and date manually. During the first time startup, press and hold the **[SENSOR / WI-FI]** key for 6 seconds and let the console back to normal mode.

1. In normal mode, press and hold **[CLOCK SET]** key for 2 seconds to enter setting.
2. The setting sequence: DST AUTO/OFF → Hour → Minute → second → 12/24 hour format → Year → Month → Day → M-D/D-M format → Time sync ON/OFF → weekday Language.
3. Press **[∧]** or **[∨]** key to change the value. Press and hold the key for quick-adjust.
4. Press **[CLOCK SET]** key to save and exit the setting mode, or the unit will automatically exit the setting mode 60 seconds later without pressing any key.

NOTE:
- In normal mode, press **[CLOCK SET]** key to switch between year and date display.
- During the setting, you can press and hold **[CLOCK SET]** key for 2 seconds to back to normal model.

DAYLIGHT SAVING TIME (DST)

DST function is set to "AUTO" by default (for EU or US version). If the current date on display is with in the summer daylight saving period, the time will will be automically adjusted forward by +1 hour, and DST icon will be shown on the LCD dsiplay.

MOON PHASE

The moon phase is determined by the time, date and time zone. The following table explains the moon phase icons of the Northern and Southern Hemispheres. Please refer to **POINTING THE WIRELESS 7-IN-1 SENSOR TO SOUTH** section about how to setup for the Southern Hemispheres.

Northern Hemisphere	Moon Phase	Southern Hemisphere
	New Moon	
	Waxing Crescent	
	First quarter	
	Waxing Gibbous	
	Full Moon	
	Waning Gibbous	
	Third quarter	
	Waning Crescent	

SUNRISE & SUNSET TIME

The console indicates your location's sunrise & sunset time by the time zone, latitude and longitude you entered. Please enter the correct information in the regarding settings. If the latitude and longitude values do not match the time zone, the sunrise & sunset time cannot be shown.

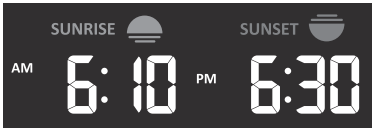

SETTING ALARM TIME

1. In normal time mode, press and hold **[ALARM]** key for 2 seconds until the alarm hour digit flashes to enter alarm time setting mode.
2. Press **[∧]** or **[∨]** key to change the value. Press and hold the key for quick-adjust.
3. Press **[ALARM]** key again to step the setting value to Minute with the Minute digit flashing.
4. Press **[∧]** or **[∨]** key to adjust the value of the flashing digit.
5. Press **[ALARM]** key to save and exit the setting.

NOTE:
- In alarm mode, the " 🔔 " icon will display on the LCD.
- The alarm function will turn on automatically once you set the alarm time.

ACTIVATING ALARM AND TEMPERATURE PRE-ALARM FUNCTION

1. In normal mode, press **[ALARM]** key to show the alarm time for 5 seconds.
2. When the alarm time displays, press **[ALARM]** key again to activate the alarm function. **Or** press **[ALARM]** key twice to activate the alarm with ice pre-alarm function.

Alarm off	Alarm on	Alarm with ice-alert

NOTE:
Once the ice pre-alert activates, the pre-set alarm will sound and ice-alert icon will flash 30 minutes earlier if the outdoor temperature is below -3°C.

When clock reach the alarm time, alarm sound will start.
Where it can be stopped by following operation:
- Auto-stop after 2 minutes alarming if without any operation and the alarm will activate again in the next day.
- By pressing **[ALARM / SNOOZE]** key to enter snooze that the alarm will sound again after 5 minutes.
- By pressing and hold **[ALARM / SNOOZE]** key for 2 seconds to stop the alarm and will activate again in the next day
- By pressing **[ALARM]** key to stop the alarm and the alarm will activate again in the next day.

NOTE:
- The snooze could be used continuously in 24 hours.
- During the snooze, the alarm icon " " will keep flashing.

TEMPERATURE / HUMIDITY FUNCTION

- The temperature and humidity reading are display on the outdoor and indoor (CH) section.
- Use the **[°C / °F]** slide switch to select the temperature display unit.
- If temperature / humidity is below the measurement range, the reading will show "Lo". If temperature / humidity is above the measurement range, the reading will show "HI".

COMFORT INDICATION

The comfort indication is a pictorial indication based on indoor air temperature and humidity in an attempt to determine comfort level.

Too cold	Comfortable	Too hot

NOTE:
- Comfort indication can vary under the same temperature, depending on the humidity.
- There is no comfort indication when temperature is below 0°C (32°F) or over 60°C (140°F).

WIRELESS SENSOR SIGNAL RECEIVING

1. The console display signal strength for the wireless sensor(s), as per table below:

Outdoor 7-in-1 sensor			
Indoor channel sensor	CH	CH	CH
	No signal	Weak signal	Good signal

2. If the signal has discontinued and does not recover within 15 minutes, the signal icon will disappear. The temperature and humidity will display "Er" for the corresponding channel.
3. If the signal does not recover within 48 hours, the "Er" display will become permanent. You need to replace the batteries and then press **[SENSOR / WI-FI]** key to pair up the sensor again.

VIEW THE OTHER INDOOR CHANNELS (OPTIONAL FEATURE WITH ADD ON EXTRA SENSORS)

This console is capable to pair with a wireless 7-IN-1 sensor and up to 7 wireless indoor sensors. If you have 2 or more Indoor sensors, you can press **[CHANNEL]** key to switch between different wireless channels in normal mode, or press and hold **[CHANNEL]** key for 2 seconds to toggle auto-cycle mode to display the connected channels at 4 seconds interval. During auto-cycle mode, the icon will show on the indoor channel section of the console's display. Press **[CHANNEL]** key to stop auto cycle and display the current channel.

TREND INDICATOR

The trend indicator shows the trends of changes in the forthcoming few minutes. The icon will appear in temperature, humidity, index and baro section.

Rising Steady Falling

WIND

WIND SPEED AND DIRECTION SECTION OVERVIEW

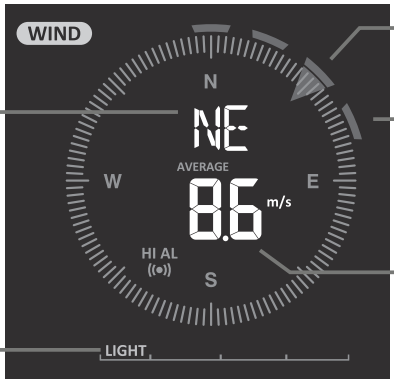

Wind direction

Real time wind direction indicator

Past wind directions indicator of last 5 minutes

Average / gust wind speed

Wind speed level indicator

TO SET THE WIND SPEED UNIT AND DIRECTION DISPLAY FORMAT

1. In normal mode, press and hold **[WIND]** key for 2 seconds to enter into wind speed unit mode and the unit will flash. Press **[∧]** or **[∨]** key to change the wind speed unit in this sequence: m/s → km/h → knots → mph
2. Press **[WIND]** key again to return to normal mode.

TO SELECT THE WIND DISPLAY MODE

In normal mode, press **[WIND]** key to switch between **BEAUFORT** scale, **AVERAGE** and **GUST** wind speed.

BEAUFORT SCALE TABLE

The Beaufort scale is an international scale of wind velocities ranging from 0 (calm) to 12 (Hurricane force).

Beaufort Scale	Description	Wind Speed	Land Condition
0	Calm	< 1 km/h	Calm. Smoke rises vertically.
		< 1 mph	
		< 1 knots	
		< 0.3 m/s	
1	Light air	1.1 ~ 5km/h	Smoke drift indicates wind direction. Leaves and wind vanes are stationary.
		1 ~ 3 mph	
		1 ~ 3 knots	
		0.3 ~ 1.5 m/s	

2	Light breeze	6 ~ 11 km/h 4 ~ 7 mph 4 ~ 6 knots 1.6 ~ 3.3 m/s	Wind felt on exposed skin. Leaves rustle. Wind vanes begin to move.
3	Gentle breeze	12 ~ 19 km/h 8 ~ 12 mph 7 ~ 10 knots 3.4 ~ 5.4 m/s	Leaves and small twigs constantly moving, light flags extended.
4	Moderate breeze	20 ~ 28 km/h 13 ~ 17 mph 11 ~ 16 knots 5.5 ~ 7.9 m/s	Dust and loose paper raised. Small branches begin to move.
5	Fresh breeze	29 ~ 38 km/h 18 ~ 24 mph 17 ~ 21 knots 8.0 ~ 10.7 m/s	Branches of a moderate size move. Small trees in leaf begin to sway.
6	Strong breeze	39 ~ 49 km/h 25 ~ 30 mph 22 ~ 27 knots 10.8 ~ 13.8 m/s	Large branches in motion. Whistling heard in overhead wires. Umbrella use becomes difficult. Empty plastic bins tip over.
7	High wind	50 ~ 61 km/h 31 ~ 38 mph 28 ~ 33 knots 13.9 ~ 17.1 m/s	Whole trees in motion. Effort needed to walk against the wind.
8	Gale	62 ~ 74 km/h 39 ~ 46 mph 34 ~ 40 knots 17.2 ~ 20.7 m/s	Some twigs broken from trees. Cars veer on road. Progress on foot is seriously impeded
9	Strong gale	75 ~ 88 km/h 47 ~ 54 mph 41 ~ 47 knots 20.8 ~ 24.4 m/s	Some branches break off trees, and some small trees blow over. Construction / temporary signs and barricades blow over.
10	Storm	89 ~ 102 km/h 55 ~ 63 mph 48 ~ 55 knots 24.5 ~ 28.4 m/s	Trees are broken off or uprooted, structural damage likely.
11	Violent storm	103 ~ 117 km/h 64 ~ 73 mph 56 ~ 63 knots 28.5 ~ 32.6 m/s	Widespread vegetation and structural damage likely.
12	Hurricane force	≥ 118 km/h ≥ 74 mph ≥ 64 knots ≥ 32.7m/s	Severe widespread damage to vegetation and structures. Debris and unsecured objects are hurled about.

WEATHER INDEX

At the WEATHER INDEX section, you can press **[INDEX]** key to view different weather index in this sequence: **FEELS LIKE → DEWPOINT → HEAT INDEX → WIND CHILL.**

FEELS LIKE

Feels Like Temperature shows what the outdoor temperature will feel like. It's a collective mixture of Wind Chill factor (18°C or below) and the Heat Index (26°C or above). For temperatures in the region between 18.1°C to 25.9°C where both wind and humidity are less significant in affecting the temperature, the device will show the actual outdoor measured temperature as Feels Like Temperature.

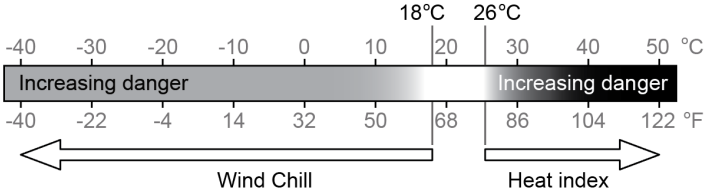

DEW POINT

- The dew point is the temperature below which the water vapor in air at constant barometric pressure condenses into liquid water at the same rate at which it evaporates. The condensed water is called *dew* when it forms on a solid surface.
- The dew point temperature is determined by the temperature & humidity data from wireless 7-IN-1 sensor.

HEAT INDEX

The heat index which is determined by the wireless 7-IN-1 sensor's temperature & humidity data when the temperature is between 26°C (79°F) and 50°C (120°F).

Heat Index range	Warning	Explanation
27°C to 32°C (80°F to 90°F)	Caution	Possibility of heat exhaustion
33°C to 40°C (91°F to 105°F)	Extreme Caution	Possibility of heat dehydration
41°C to 54°C (106°F to 129°F)	Danger	Heat exhaustion likely
≥55°C (≥130°F)	Extreme Danger	Strong risk of dehydration / sun stroke

WIND CHILL

A combination of the wireless 7-IN-1 sensor's temperature and wind speed data determines the current wind chill factor.

WEATHER FORECAST

The built-in barometer continually monitor atmosphere pressure. Based on the data collected, it can predict the weather conditions in the forthcoming 12~24 hours within a 30~50km (19~31 miles) radius.

Sunny | Partly cloudy | Cloudy | Rainy | Rainy / Stormy | Snowy

NOTE:

- The accuracy of a general pressure-based weather forecast is about 70% to 75%.
- The weather forecast is reflecting the weather situation for next 12~24 hours, it may not necessarily reflect the current situation.
- The **SNOWY** weather forecast is not based on the atmospheric pressure, but based on the temperature of outdoor. When the temperature is below -3°C (26°F), the **SNOWY** weather icon will be displayed on the LCD.

BAROMETRIC PRESSURE

The atmospheric pressure is the pressure at any location of the earth caused by the weight of the column of air above it. One atmospheric pressure refers to the average pressure and gradually decreases as altitude increases. Meteorologists use barometers to measure atmospheric pressure. Since variation in atmospheric pressure greatly affected by weather, it is possible to forecast the weather by measuring the changes in pressure.

TO VIEW THE BAROMETRIC PRESSURE IN DIFFERENT UNIT

In normal mode, press **[BARO]** key to change the barometer unit in this sequence: hPa → inHg → mmHg

TO SET ABSOLUTE OR RELATIVE BAROMETRIC PRESSURE

In normal mode, press and hold **[BARO]** key to switch between **ABSOLUTE / RELATIVE** barometric pressure.

RAIN

The **RAINFALL** section shows the rainfall or rain rate information.

TO SET THE RAINFALL UNIT

1. Press and hold **[RAIN]** key for 2 seconds to enter unit setting mode.
2. Press **[∧]** or **[∨]** key to toggle the unit between mm and in (rainfall) or mm/h and in/h (rain rate).
3. Press **[RAIN]** key to confirm and exit the setting.

TO SELECT THE RAINFALL DISPLAY MODE

Press **[RAIN]** key to toggle between:

1. **HOURLY** - the total rainfall in the past hour
2. **DAILY** - the total rainfall from midnight (default)
3. **WEEKLY** - the total rainfall of the current week
4. **MONTHLY**- the total rainfall of the current calendar month
5. **Total** - the total rainfall since the last reset
6. **Rate** - Current rainfall rate (base on 10 min rain data)

Period of rainfall

Rain rate level

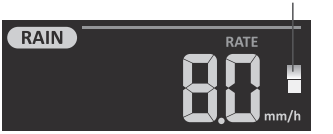

Rain rate level definition:

Level 1: Light rain 0.1~ 2.5 mm/h

Level 2: Moderate 2.51 ~ 10.0 mm/h

Level 3: Heavy rain 10.1 ~ 50.0 mm/h

Level 3 Violent rain: > 50.0 mm/h

TO RESET THE TOTAL RAINFALL RECORD

In normal mode, press and hold **[HISTORY]** key for 2 seconds to reset all the rainfall record.

NOTE:

To ensure to have correct data, please reset all the rainfall record when you reinstall your wireless 7-IN-1 sensor to other location

LIGHT INTENSITY, UV INDEX & SUNBURN TIME

This section of display show the sunlight intensity, UV index and sunburn time. Press the **[SUN]** key to change the mode.

LIGHT INTENSITY MODE:

1. During light intensity mode, press and hold **[SUN]** key for 2 seconds to enter unit setting
2. press **[∧]** or **[∨]** key change the unit in sequence: Klux → Kfc → W/m².
3. Press **[SUN]** key to confirm and exit the setting.

UV INDEX MODE:

To show the currect UV index detected by the outdoor sensor. Corresponding exposure level and suggested protection indicator are also displayed.

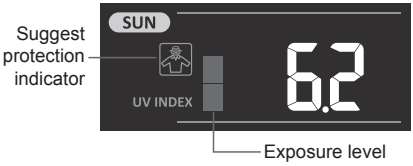

SUNBURN TIME MODE:

To show the recommended sunburn time according to current UV level.

UV INDEX & SUNBURN TIME TABLE

Exposure level	Low		Moderate			High		Very high			Extreme	
UV index	1	2	3	4	5	6	7	8	9	10	11	12~16
Sunburn time	N/A		45 minutes			30 minutes		15 minutes			10 minutes	
Recommended protection indicator	N/A		Moderate or high UV level! Suggest to wear sunglasses, broad brim hat and long-sleeved clothing.					Very high or Extreme UV level! Suggest to wear sunglasses, broad brim hat and long-sleeved clothing, If you have to stay outdoors, make sure to seek shade.				

NOTE:

- The sunburn time is based on normal skin type, it is just a reference of UV strength. In general, the darker one's skin is, the longer (or more radiation) it takes to affect the skin.
- The light intensity function is for sunlight detection.

MAX / MIN DATA RECORD

The console can record the accumulated MAX / MIN weather data with the corresponding time stamp for you to easy review.

TO VIEW THE ACCUMULATED MAX / MIN

In normal mode, press **[MAX / MIN]** key to check MAX/MIN records in the following display sequence is: outdoor MAX temperature → outdoor MIN temperature → outdoor MAX humidity → outdoor MIN humidity → indoor current channel MAX temperature → indoor current channel MIN temperature → indoor current channel MAX humidity → indoor current channel MIN humidity → MAX average wind speed → MAX gust → MAX FEELS LIKE → MIN FEELS LIKE → MAX dew point → MIN dew point → MAX heat index → MIN heat index → MAX wind chill → MIN wind chill → MAX UV index → MAX light intensity → MAX relative pressure → MIN relative pressure → MAX absolute pressure → MIN absolute pressure → MAX rain rate.

TO CLEAR THE MAX/MIN RECORDS
Press and hold **[MAX / MIN]** key for 2 seconds to reset the current on display MAX or MIN records.

NOTE:
The LCD will also display the " MAX " / " MIN ", " HISTORY " icon, data records time & date.

PAST 24 HOURS HISTORY DATA
The console automatically stores the weather data of the past 24 hours.
1. Press **[HISTORY]** key to check the beginning of the current hour's weather data, e.g. the current time is 7:25 am, March 8, the display will show the data of 7:00am, March 8.
2. Press **[HISTORY]** key repeatedly to view older readings of the past 24 hours, e.g. 6:00am (Mar 8), 5:00am (Mar 8), …, 10:00am (Mar 7), 9:00am (Mar 7), 8:00am (Mar 7)

NOTE:
The LCD will also display the " HISTORY " icon, history data records with time & date.

WEATHER ALERT SETTING
Weather Alert can alert you of certain weather conditions. Once the alert criterion is met, the alarm sound will activate and the LCD's alert icon will flash.

TO SET ALERT
1. Press **[ALERT]** to select and display the desired weather alert reading in the sequence listed in the table below:

Alert reading Sequence	Setting Range	Display Section	Default
Outdoor Temperature High Alert	-40°C ~ 80°C	Outdoor temperature & humidity	40°C
Outdoor Temperature Low Alert			0°C
Outdoor Humidity High Alert	1% ~ 99%		80%
Outdoor Humidity Low Alert			40%
Indoor Current Channel Temperature High Alert	-40°C ~ 80°C	Indoor CH temperature & humidity	40°C
Indoor Current Channel Temperature Low Alert			0°C
Indoor Current Channel Humidity High Alert	1% ~ 99%		80%
Indoor Current Channel Humidity Low Alert			40%
Average Wind Speed	0.1m/s ~ 50m/s	Wind direction & speed	17.2m/s
Feels Like High Alert	-65°C ~ 50°C	Weather index	20°C
Feels Like Low Alert			0°C
Dewpoint High Alert	-40°C ~ 80°C		10°C
Dewpoint Low Alert			-10°C
Heat Index High Alert	26°C ~ 50°C		30°C
WindChill Low Alert	-65°C ~ 18°C		0°C
UV index High Alert	1 ~16	UV & light intensity	10
Light intensity High Alert	0.01 ~ 200.0Klux		100Klux
Pressure Drop	1hPa ~ 10hPa	Barometer	3hPa
Hourly Rainfall	1mm ~ 1000mm	Rainfall	100mm

2. Under the current alert reading, press and hold **[ALERT]** key for 2 seconds to enter alert setting and the alert reading will flash.

3. Press **[∧]** or **[∨]** key to adjust the value or press and hold the key to change rapidly.
4. Press **[ALERT]** key to confirm the value.
5. Press **[ALARM]** key to toggle the regarding alert on / off.
6. Press **[ALERT]** key to shift to next alert reading.

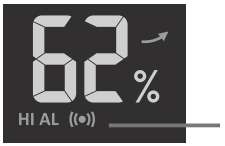

High / Low
Alert on

Alert on

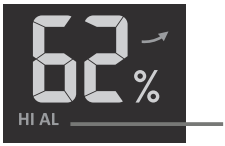

Alert off

Alert off

7. Press any key on the front side to save alert on /off status and back to normal mode, or it will automatically back to normal mode after 30 seconds without pressing any key.

TO SILENCE THE ALERT ALARM

Press **[ALARM / SNOOZE]** key to silence the alert alarm or let the alarm automatically turn off after 2 minutes.

NOTE:

- Once the alert is triggered, the alarm will sound for 2 minutes and the related alert icon and readings will flash.
- If the alert alarm is automatically off after 2 minutes, the alert icon and readings will still keep flash until the weather reading is out of the alert range.
- The weather alert will sound again when the weather readings falls into the alert range again.

BACKLIGHT

The main unit backlight can be adjust, using the **[OFF / HI / LO]** sliding switch to select the appropriate brightness:

- Slide to the **[HI]** position for the brighter backlight.
- Slide to the **[LO]** position for the dimmer backlight.
- Slide to the **[OFF]** position turn off the backlight

DISPLAY CONTRAST

Press **[◑ / ∧]** key in normal mode to adjust LCD contrast in order to fit table stand or wall mount angle.

MAINTENANCE

BATTERY REPLACEMENT

When low battery indicator " ▭ " is displayed in OUT or IN section, it indicates that the outdoor 7-IN-1 sensor and current channel sensor battery power is low respectively. Please replace with new batteries.

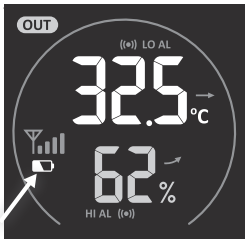

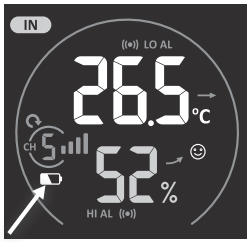

WIRELESS 7-IN-1 SENSOR MAINTNANCE

REPLACE THE WIND VANE
Unscrew and remove the wind vane for replacement

REPLACE THE WIND CUP
1. Unscrew and remove the top cap
2. Remove the wind cup for replacement

CLEANING HYGRO-THERMO SENSOR
1. Remove the 2 screws at the bottom of the radiation shield.
2. Gently pull out the shield.
3. Carefully remove any dirt or insects on the sensor and ventilation fan (do not let the sensors inside get wet).
4. Clean the shield with water to remove any dirt or insects.
5. Install all the parts back when they are clean and fully dried.

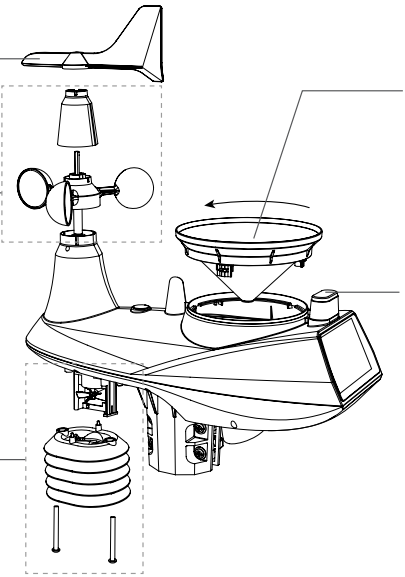

CLEANING THE RAIN COLLECTOR
1. Rotate the rain collector by turning it 30°anti-clockwise.
2. Gently remove the rain collector.
3. Clean and remove any debris or insects.
4. Install the collector when it is clean and fully dried.

CLEANING THE UV SENSOR AND CALIBRATION
- For precision UV measurement, gentle clean the UV sensor cover lens with damp micro-fiber cloth.
- Over time, the UV sensor will naturally degrade. The UV sensor can be calibrated with a utility grade UV meter, please refer to Calibration section in previous page for about the UV sensor cablibration.

TROUBLESHOOT

Problems	Solution
7-in-1 wireless sensor is intermittent or no connection	1. Make sure the sensor is within the transmission range 2. If it still not work, reset the sensor and resynchronize with console.
Indoor wireless sensor is intermittent or no connection	1. Make sure the sensor is within the transmission range 2. Make sure the channel displayed match to the channel selection on sensor 3. If it still not work, reset the sensor and resynchronize with console.
No WiFi connection	1. Check for WiFi symbol on the display, it should be alway on. 2. Make sure you connect to 2.4G band but not 5G band of your WiFi router.
Data not reporting to Wunderground.com or weathercloud.net	1. Ensure your Station ID and Station Key are correct. 2. Ensure the date and time is correct on the tablet . If incorrect, you may be reporting old data, not real time data. 3. Ensure your time zone is set properly. If incorrect, you may be reporting old data, not real time data.
Wunderground Precip. Accum. Total graph offset 1 hour reset time, during summer daylight saving time	1. Ensure the time zone of the device on Wunderground set correctly 2. Ensure the time zone and DST on your console are correct. 3. If you located your station out of US time zone region in Wunderground, the DST will be invalid. To solve this issue, please turn off the DST function in console.
Rainfall is not correct	1. Please keep the rain collector clean 2. Make sure the tipping bucket inside can work smoothly

Temperature reading too high in the day time	1. Check the ventilation fan inside the radiation shield to make sure it can work properly. 2. Make certain that the sensor array is not too close to heat generating sources or strictures, such as buildings, pavement, walls or air conditioning units.

SPECIFICATIONS

CONSOLE

General Specification	
Dimensions (W x H x D)	215 x 172 x 29mm (8.5 x 6.8 x 1.1in)
Weight	639g (with batteries)
Main power	DC 5V, 1A adaptor
Backup battery	3 x AAA size 1.5V batteries (alkaline recommended)
Operating temperature range	-5˚C ~ 50˚C
Wi-fi Communication Specification	
Wi-fi standard	802.11 b/g/n
Wi-fi operating frequency :	2.4GHz
Supported router security type	WPA/WPA2, OPEN, WEP (WEP only support Hexadecimal password)
Supported device for setup UI	Built-in Wi-fi with AP mode function smart devices, laptops or PCs: Android smart phone, Android pad, iPhone, iPad or Windows laptop
Recommended web browser for setup UI	Web browsers that support HTML 5, such as the latest version of Chrome, Safari, Edge, Firefox or Opera.
Wireless Sensor side Communication Specification	
Support sensors	1 Wireless 7-IN-1 weather outdoor sensor and up to 7 Wireless hygro-thermo indoor sensors
RF frequency (depend on country version)	915Mhz (US version) / 868Mhz (EU or UK version) / 917Mhz (AU version)
RF transmission range	150m
Time Related Function Specification	
Time display	HH: MM: SS
Hour format	12hr AM / PM or 24 hr
Date display	DD / MM or MM / DD
Time synchronize method	Through Internet time server to synchronize the UTC
Weekday languages	EN / DE / FR / ES / IT / NL / RU
Time Zone	+13 ~ -12 hour
DST	AUTO / OFF
Barometer Display & Function Specification **Note:** The following details are listed as they are displayed or operate on the console.	
Barometer unit	hPa, inHg and mmHg
Measuring range	540 ~ 1100hPa (relative setting range 930 ~ 1050hPa)

Accuracy	(700 ~ 1100hPa ± 5hPa) / (540 ~ 696hPa ± 8hPa) (20.67 ~ 32.48inHg ± 0.15inHg) / (15.95 ~ 20.55inHg ± 0.24inHg) (525 ~ 825mmHg ± 3.8mmHg) / (405 ~ 522mmHg ± 6mmHg) Typical at 25°C (77°F)
Resolution	1hPa / 0.01inHg / 0.1mmHg
Weather forecast	Sunny / Clear, Slightly Cloudy, Cloudy, Rainy, Rainy / Stormy and Snowy
Display modes	Current
Memory modes	Historical data of past 24 hours, daily Max / Min
Alarm	Pressure change alert
Indoor / Outdoor Temperature Display & Function Specification **Note:** The following details are listed as they are displayed or operate on the console.	
Temperature unit	°C and °F
Display range	Indoor:-40 ~ 70°C(-40 ~ 158°F), Outdoor:-40 ~ 80(-40 ~ 176°F)
In/Out Accuracy	55 ~ 60°C ± 0.5°C (131 ~ 140°F ± 0.9°F) 10 ~ 55°C ± 0.4°C (50 ~ 131°F ± 0.7°F) -20 ~ 10°C ± 1.3°C (-4 ~ 50°F ± 2.3°F) -40 ~ -20°C ± 1.9°C (-40 ~ -4°F ± 3.4°F)
Resolution	°C / °F (1 decimal place)
Display modes	Current
Memory modes	Historical data of past 24 hours, daily Max / Min
Alarm	Hi / Lo temperature alert
Indoor / Outdoor Humidity Display & Function Specification **Note:** The following details are listed as they are displayed or operate on the console.	
Humidity unit	%
Display range	1 ~ 99%
In/Out Accuracy	1 ~ 20% RH ± 6.5% RH @ 25°C (77°F) 21 ~ 80% RH ± 3.5% RH @ 25°C (77°F) 81 ~ 99% RH ± 6.5% RH @ 25°C (77°F)
Resolution	1%
Display modes	Current
Memory modes	Historical data of past 24 hours, Max / Min
Alarm	Hi / Lo Humidity Alert
Wind Speed & Direction Display and Function Specification **Note:** The following detail are listed as they are displayed or operate on the console.	
Wind speed unit	mph, m/s, km/h and knots
Wind speed display range	0 ~ 112mph, 50m/s, 180km/h, 97knots
Resolution	mph, m/s, km/h and knots (1 decimal place)
Speed accuracy	< 5m/s: +/- 0.5m/s; > 5m/s: +/- 6% (whichever is greater)
Display mode	Gust / Average
Memory modes	Historical Data of past 24 hours, Max Gust / Average
Alarm	Hi Wind Speed Alert (Average)
Wind direction display mode	16 directions or 360 degree

Rain Display & Function Specification **Note:** The following details are listed as they are displayed or operate on the console.	
Unit for rainfall	mm and in
Accuracy for rainfall	± 7% or 1 tip
Range of rainfall	0 ~ 19999mm (0 ~ 787.3 in)
Resolution	0.254mm (3 decimal place in mm)
Display modes	Current
Memory modes	Historical Data of the past 24 hours, Max
Rainfall display mode	Hourly / Daily / Weekly / Monthly / Total rainfall
Alarm	Hi Daily Rainfall Alert
UV INDEX DISPLAY AND FUNCTION SPECIFICATION **Note:** The following detail are listed as they are displayed or operate on the console.	
Display range	0 ~ 16
Resolution	1 decimal place
Display mode	UV index, sunburn time
Memory modes	Historical Data of past 24 hours, Max
Alarm	Hi UV Alert
LIGHT INTENSITY DISPLAY AND FUNCTION SPECIFICATION **Note:** The following detail are listed as they are displayed or operate on the console	
Light intensity unit	Klux, Kfc and W/m²
Display range	0 ~ 200Klux
Resolution	Klux, Kfc and W/m² (2 decimal place)
Memory modes	Historical Data of past 24 hours, Max
Alarm	Hi Light Intensity Alert
Weather Index Display & Function Specification **Note:** The following details are listed as they are displayed or operate on the console	
Weather index mode	Feels like, Wind Chill, Heat Index and Dew point
Feels like display range	-65 ~ 50°C
Dew point display range	-20 ~ 80°C
Heat index display range	26 ~ 50°C
Wind chill display range	-65 ~ 18°C (wind speed >4.8km/h)
Display modes	Current
Memory modes	Historical Data of past 24 hours, Max / Min
Alarm	Feels like Hi/Lo Alert; Dew Point Hi/Lo Alert; Heat Index Hi Alert, Wind Chill Lo Alert

WIRELESS 7-IN-1 SENSOR

Dimensions (W x H x D)	370.5 x 334 x 144.5mm (14.6 x 13.1 x 5.7in)
Weight	1096g (with batteries)
Main power	3 x AA size 1.5V batteries (Lithium batteries recommended)
Weather data	Temperature, Humidity, Wind speed, Wind direction, Rainfall, UV and light intensity
RF transmission range	150m
RF frequency (depend on country version)	915Mhz (US) / 868Mhz (EU, UK) / 917Mhz (AU)

Transmission interval	- 12 seconds for UV, light intensity, wind speed and wind direction data - 24 seconds for temperature, humidity and rain data
Operating range	-40 ~ 60°C (-40 ~ 140°F) Lithium batteries required

WIRELESS THERMO-HYGRO INDOOR SENSOR

Dimensions (W x H x D)	60 x 113 x 39.5mm (2.4 x 4.4 x 1.6in)
Weight	144g (with batteries)
Main power	2 x AA size 1.5V batteries (Lithium batteries recommended)
Weather data	Temperature and Humidity
RF transmission range	150m
RF frequency (depend on country version)	915Mhz (US) / 868Mhz (EU, UK) / 917Mhz (AU)
Transmission interval	60 seconds for temperature and humidity
Operating range	-40 ~ 60°C (-40 ~ 140°F) Lithium batteries required

This device complies with Part 15 of the FCC Rules. Operation is subject to the following two conditions:
(1) this device may not cause harmful interference, and
(2) this device must accept any interference received, including interference that may cause undesired operation.

Warning:
Changes or modifications to this unit not expressly approved by the party responsible for compliance could void the user's authority to operate the equipment.

NOTE: This equipment has been tested and found to comply with the limits for a Class B digital device, pursuant to Part 15 of the FCC Rules. These limits are designed to provide reasonable protection against harmful interference in a residential installation. This equipment generates, uses and can radiate radio frequency energy and, if not installed and used in accordance with the instructions, may cause harmful interference to radio communications.

However, there is no guarantee that interference will not occur in a particular installation. If this equipment does cause harmful interference to radio or television reception, which can be determined by turning the equipment off and on, the user is encouraged to try to correct the interference by one or more of the following measures:
- Reorient or relocate the receiving antenna.
- Increase the separation between the equipment and receiver.
- Connect the equipment into an outlet on a circuit different from that to which the receiver is connected.
- Consult the dealer or an experienced radio/TV technician for help.

Caution: To maintain compliance with the FCC's RF exposure guidelines, place the unit at least 20cm from nearby persons.