FCC Statement:

This device complies with part 15 of the FCC Rules. Operation is subject to the following two

conditions: (1) This device may not cause harmful interference, and (2) this device must accept any interference received, including interference that may cause undesired operation.

NOTE: This equipment has been tested and found to comply with the limits for a Class B digital device, pursuant to part 15 of the FCC Rules. These limits are designed to provide reasonable protection against harmful interference in a residential installation. This equipment generates, uses and can radiate radio frequency energy and, if not installed and used in accordance with the instructions, may cause harmful interference to radio communications. However, there is no guarantee that interference will not occur in a particular installation.

If this equipment does cause harmful interference to radio or television reception, which can be determined by turning the equipment off and on, the user is encouraged to try to correct the interference by one or more of the following measures:

—Reorient or relocate the receiving antenna.

—Increase the separation between the equipment and receiver.

—Connect the equipment into an outlet on a circuit different from that to which the receiver is

connected.

—Consult the dealer or an experienced radio/TV technician for help.

Changes or modifications not expressly approved by the party responsible for compliance could void the user's authority to operate the equipment.

This equipment complies with FCC radiation exposure limits set forth for an uncontrolled environment. This equipment should be installed and operated with a minimum distance of 20 cm between the radiator and a human body.

If the identification number is not visible when the module is installed inside another device, then the outside of the device into which the module is installed must also display a label referring to the enclosed module, Contains FCC ID: 2AM4E37130AGJ5.

Co-location of this module with other transmitters that operate simultaneously are required to be evaluated using the multi-transmitter procedures.

The host integrator must follow the integration instructions provided in this document and ensure that the composite-system end product complies with the requirements by a technical assessment or evaluation to the rules and to KDB Publication 996369.

The host integrator installing this module into their product must ensure that the final composite product complies with the requirements by a technical assessment or evaluation to the rules, including the transmitter operation and should refer to guidance in KDB 996369.

This module will be installed into a motorcycle instrument panel and only approved for use by the grantee in its own products. It not intended for sale to third parties,thus the integration instructions not be detailed. The instructions placed in the theory – of –operation exhibits using for long term confidential.

To access the noodoe system

Check the "Download noodoe APP" to download the APP. The noodoe system will get installed automatically after successful download.

Download the noodoe APP: The user may enter the Google Play Shop (Android) or App Store (iOS) and search with the keyword "noodoe".

Available on the App Store

Get it on Google Play

⚠CAUTION

- **Minimum supported version: Android 4.4 or above, iOS 9 or above.**
- **Your smartphone is required to have Google service support to operate the APP successfully.**

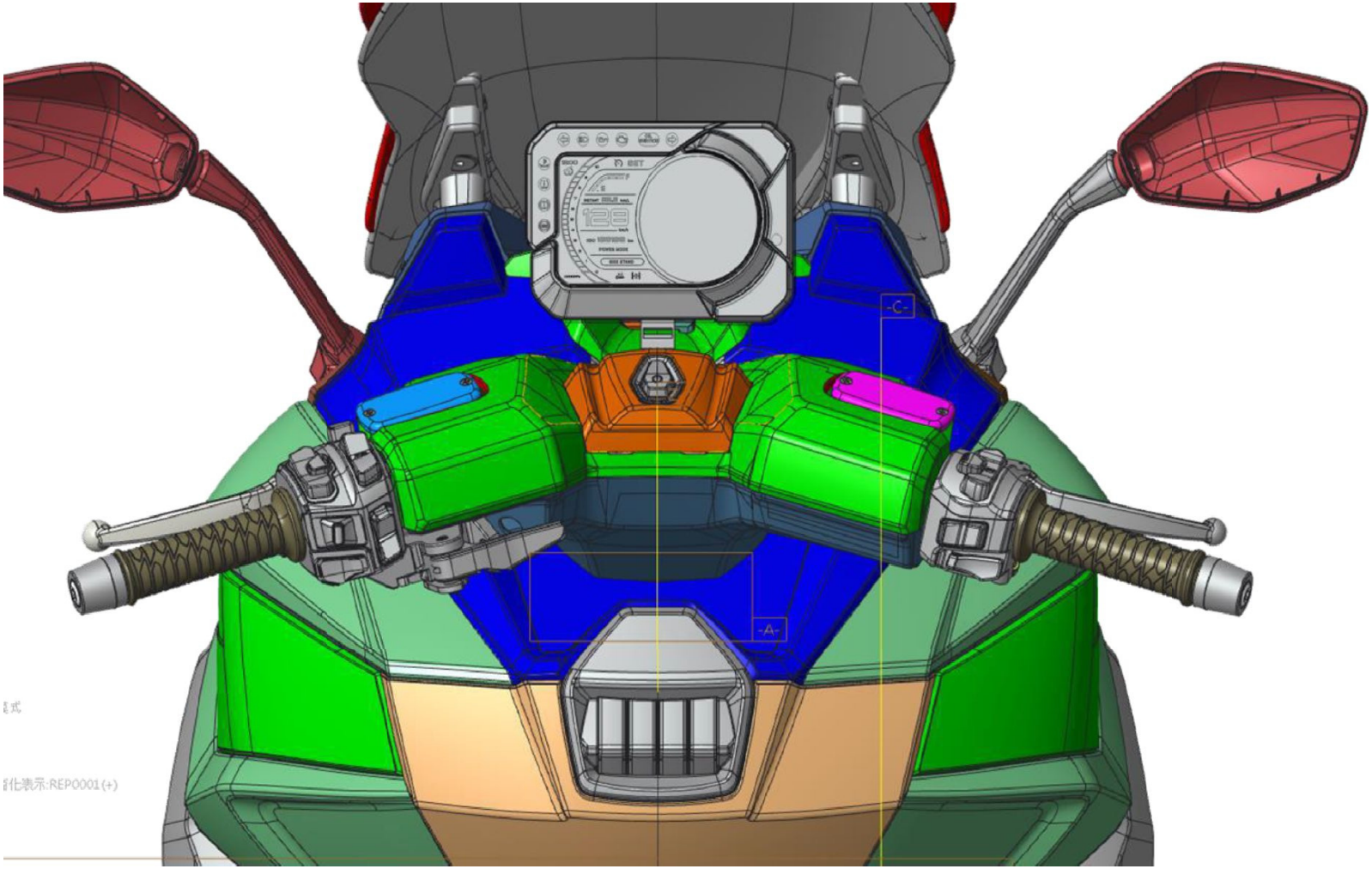
-C-
-A-
式
化表示:REP0001(+)

Handlebar Control button overview

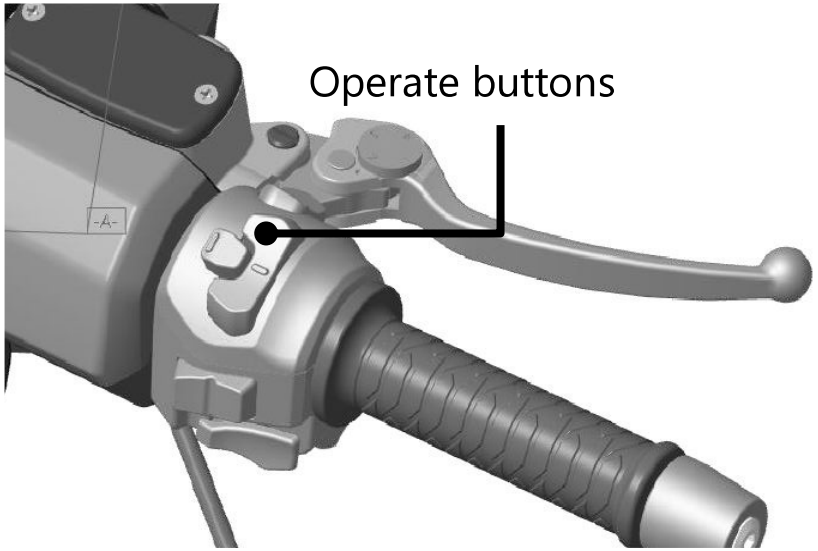

	(^) Button: Up button
	(ˇ) Button: Down button
	(O) Button: Enter button

While riding

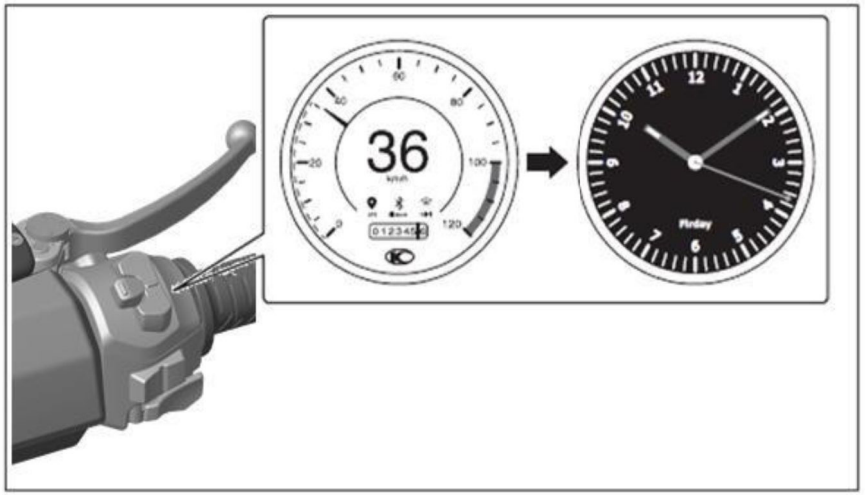

- Operate (︿) and (﹀) buttons to switch-over between 4 screens of Dashboard noodoe functions.
- Press (O) button to end the action.

When Stopped

Message Notice:

- Operate (︿) and (﹀) buttons to switch-over message notices in the Dashboard noodoe Function.
- Press (O) button to activate or close message notices.

Menu page:

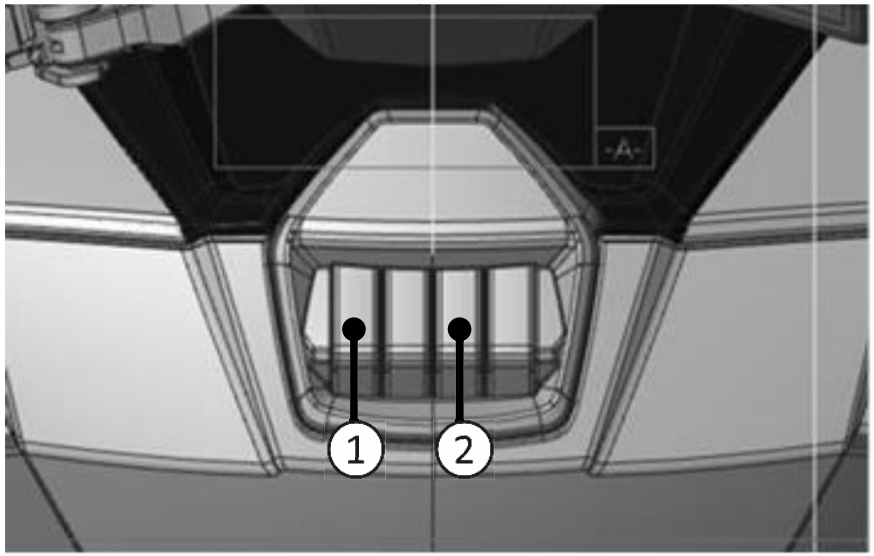

1. TRIP control button
2. MENU control button

Operate the menu control button to enter menu page when vehicle stopped.

Scooter Pairing

Ignition on(Scooter) → set the switch to n position (Scooter) →Press (O) button for 5s to enter "Pairing Mode" (Scooter) → Select a new user (Scooter) by the Operation Button → Select Bluetooth Device (cell phone) → Link (cell phone) → Confirm Code (cellphone and Scooter) → Press (O) button → Pairing accomplished.

Upload Creation

User created Dashboard can be installed onto scooter.

- Cell phone display

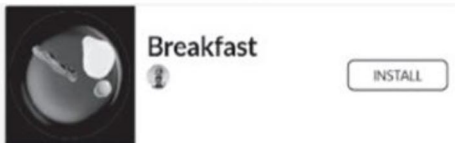

Upload creation to Scooter.

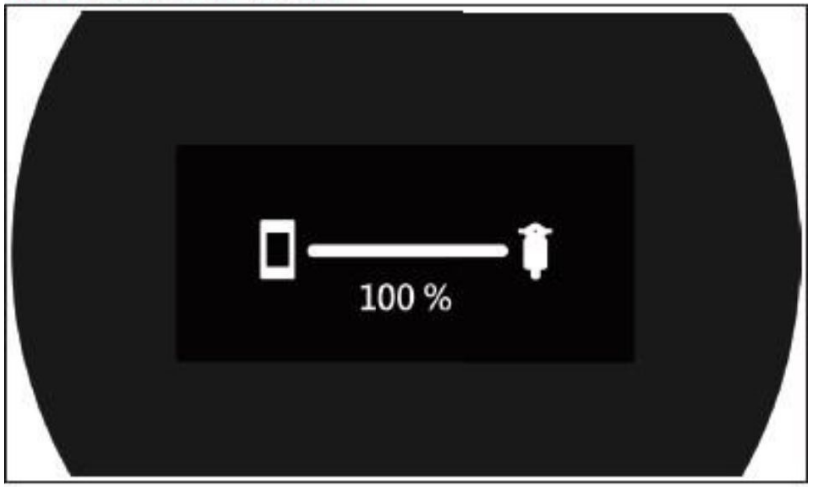

- Dashboard Display

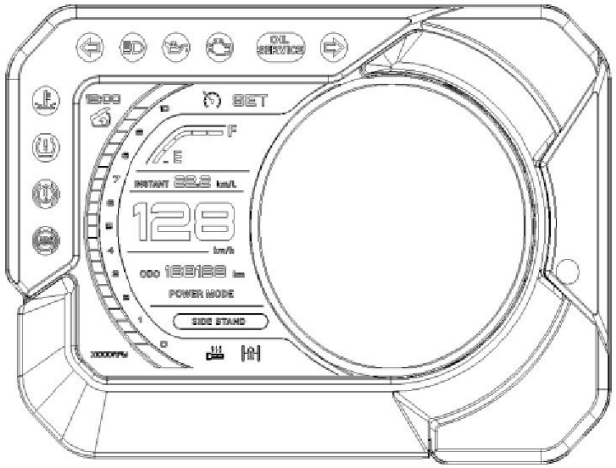

App Functions

- The user may browse and collect creations from users all over the world and install them into the Dashboard of your vehicle.
- The user may collect or remix any creation you find, or design his/her own dashboard in Create Mode.

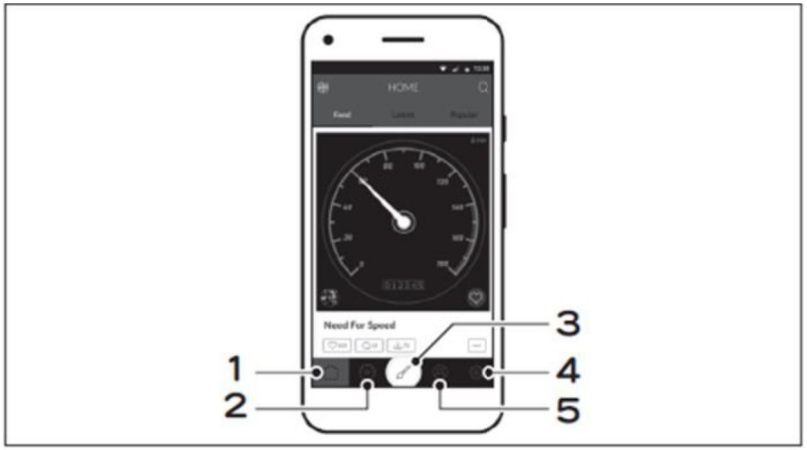

1. Home/ Feed
2. My dashboard
3. Create mode
4. My profile
5. Settings

Create Mode

- Create Mode allows you to remix an existing template to your liking.
- Pick between Clock, Weather, Compass or Speed and unleash your creativity. You can change colors, fonts, upload your own images and more possibilities.

Find My Scooter

- Forgot where you've parked? No worries, noodoe remembers.
- Tap the icon and the app will guide you back to where you last parked.

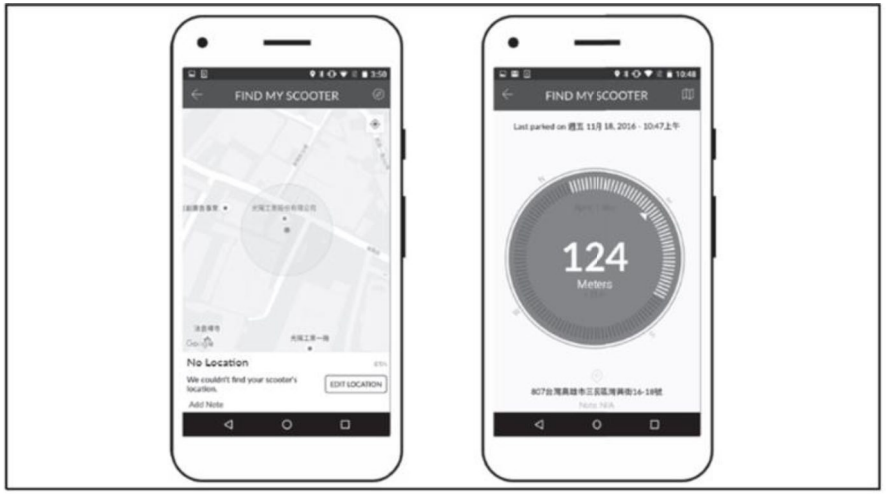

Both Bluetooth/GPS/Internet functions shall be activated in your cell phone.

There are 2 modes of "Find my Scooter" display

1. Map Mode
2. Azimuth Mode

Message Notice

Once the cell phone is linked, any incoming message will be forwarded to the scooter dashboard (Android users may select display with → Setting → Application procedure in the selection).

While Driving:

A message "For the sake of safety, no message is viewable when you drive the scooter." is displayed on the top of Dashboard noodoe.

When Stopped:

Any message received during your ride will be displayed automatically when you make a subsequent stop.

You may also press the Up and Down button on the right handlebar switch (only when your stop the vehicle) to manually check message contents

Welcome Light

Every time you approach your scooter, it will greet you with a Welcome Light. This is very useful when you're looking for your scooter in a crowded parking area or in nighttime.

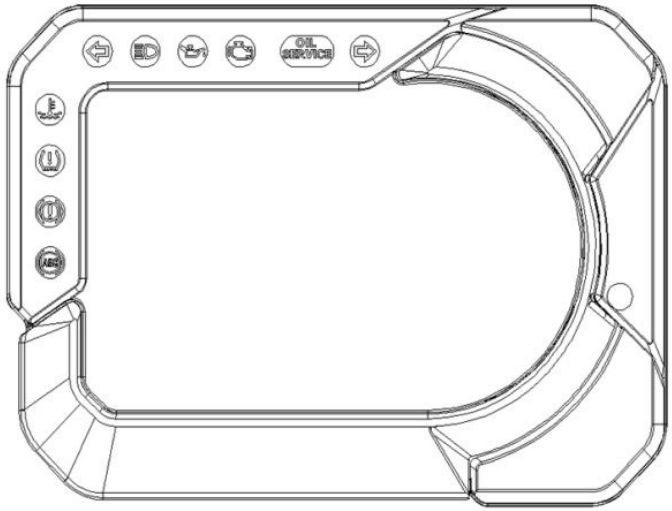

⚠CAUTION

1. **For enhancing the accuracy of displayed weather and local information, you should activate GPS and Network functions of your cell phone. (In case of cell phone signal failure, previous information will be displayed until resumption of the cell phone signal for displaying accurate information).**
2. **Switching over of Speed / Temperature / Time units are carried out from a cell phone; minor difference resulting from the frequency of data updating is within a reasonable range.**
3. **Scanning speed and results of Bluetooth Device may be limited in compatibility issues due to cell phone specifications.**
   a. **Scanning speed of Bluetooth Device is slow.**
   b. **Pairing is unsuccessful.**
   c. **Bluetooth error occurs during the link.**
4. **The User needs to set cell phone's Cloud Messaging function to facilitate noodoe message display.**
5. **While driving, noodoe will not display any message (including incoming call, message, LINE, FB, etc.). While vehicle stops, noodoe automatically displays incoming calls and relevant information.**
6. **The last screen at the previous shut down will be the first screen on a re-start.**
7. **Compass function must be activated by performing the setting on a cell phone. The minor errors may exist depending on the upgrade frequency of data.**

⚠CAUTION

8. Compass only performs self-verification to modify orientation when the vehicle starts to move, therefore it is normal that no orientation calibration is activated after connecting the noodoe App when the vehicle has not started moving yet.
9. Time of noodoe will be calibrated automatically after connecting noodoe with a cell phone.
10. The user shall never operate noodoe while riding the vehicle or an accident may occur.
11. Action of Welcome Light function can be set using an APP (On or Off).
    When Welcome Light is set enabled:
    a. Welcome Light is only activated on a subsequent connection of a Bluetooth Device. Each activation lasts for 2 minutes before switching off automatically.
    b. After each riding, a single cell phone linkage will only activate Welcome Light 3 times; Welcome Light will shut off Bluetooth function automatically after being activate 3 times.
    c. Entering the Find My Scooter screen will include a and b limitations, the noodoe system will activated Welcome Light until the user leaves the Find My Scooter screen or shuts off the Bluetooth connection function.
    d. The welcome light remains in standby mode for 3 days after shutdown. The Bluetooth function turns off 3 days later or when welcome light or battery voltage gets too low (about 12V).
12. When KEYLESS Main Switch is Off, all the information will be removed, for preventing leaking of personal info.
13. APP info display speed may be limited due to network transfer rate, therefore resulting in slow data indication under poor networking speed.
14. There are certain APP notice limitations between iOS and Android system.
15. There are possibilities that APP functions may become unusable after upgrading iOS and Android software; some new cell phone models may have unusable issues.
16. When using noodoe, the cellphone and the vehicle should be fully charged for optimal performance. If the engine needs to run to charge the battery, make sure the vehicle is in a well-ventilated area.
17. When the battery voltage is too low (about 12V) for more than 30s, the noodoe system will shut down automatically. If the battery voltage is lower than 11.8V, please run the engine or turn of the system, and have the vehicle be checked by an authorized dealer.
18. The noodoe system may shut off and enter into protection mode due to excessive temperature rise under certain special environments or mode; however the system will resume operation when the temperature drops.

Noodoe2.0	
Processor	ARMR CortexR -M7 based Processor
OS	Noodoe OS
Capacity	128MB (64MBx2) SDRAM 4GB eMMC
Display	Transflective TFT LCD 3.6″ / 6″ 480 x 480 pixel resolution (3.6″) 480 x 800 pixel resolution (6″)
Sensor	Ambient Light Sensor and G Sensor
Wireless Connectivity	Bluetooth Classic EDR & BLE V4.2
Function	Noodoe is a connected scooter experience that puts you, the rider, at the center of everything. The KYMCO Noodoe app helps you make your connected KYMCO experience thoughtful, personal and social. Noodoe is thoughtful. As you approach your KYMCO, your phone automatically connects to the scooter. When you turn on the ignition, you are greeted with your favorite photo. Noodoe reminds you of the weather forecast, so you know that it's not going to rain. While riding, the world's first road-centric navigation for two-wheel transportation guides you to your destination. When the gas runs low, the smart compass helpfully shows you nearby gas stations. At a stoplight, Noodoe presents you with missed calls, breaking news, new messages, and friends' social updates, all without you having to pull out the phone. When you park, Noodoe automatically memorizes the location. From the moment you approach the scooter, until the end of each journey, every moment is inspirational and fun. Noodoe is personal. It helps you celebrate self-expression because no two persons in the world are the same. You have different likes, different needs, and crave for new ways to express yourself. Because of this, Noodoe is a real-time cloud service that gives you choices. Noodoe cloud lets you browse different dashboard designs, download the ones you like to your personal collection, and install them onto your scooter. Beyond a great rider experience, Noodoe makes your scooter the only one of its kind.

	Noodoe is social. With a bit of inspiration, you can become a Noodoe dashboard designer and publish your designs to the Noodoe cloud. Noodoe is a full-fledged social network where you can share your creations, follow others, and be followed. The result: endless one-of-a-kind creations, representing the ultimate form of self-expression. It's no longer just about moving from A to B, but a rewarding experience of self-expression, creativity, sharing, belonging, and social interactions. Key functions for staying connected and informed: • Navigation – Let the world's first road-centric navigation optimized for two wheel transportation guide you to your destination. • Time – Select your preferred clock designs from the Noodoe cloud, you can also design your own clock. • Weather –Noodoe displays current weather conditions and provides the weather forecast for you. You can select preferred weather dashboard designs from the Noodoe cloud or design your own weather dashboard. • Speed – Select your preferred speedometer designs from the Noodoe cloud or design your own speedometer dashboard. • Smart Compass – With you as the center point, the system provides relative locations of nearby KYMCO dealers, gas stations, convenience stores, and other useful points of interest. • Groups - Show the relative locations of your riding crew members on the dashboard as you tour around town. • Gallery – Choose your favorite image from your phone to greet you on the dashboard as you start up your Kymco scooter. • Notification – Noodoe displays important notifications from your smart phone when the scooter is stopped. Notifications include Facebook, Line, WhatsApp, missed calls, etc. • Find My Ride – Noodoe records the last parked location when the ignition is turned off so it can guide you to the parked location via your phone when you're ready to hit the road. • Journey Diary – Create and share diaries of your most awesome riding adventures. You can also explore epic journeys of other Noodoe riders.
Dimension	86.9 x 79.6 x 18.4mm (L x W x H) (PCBA module)
Remark	*All specifications are subject to change without notice.

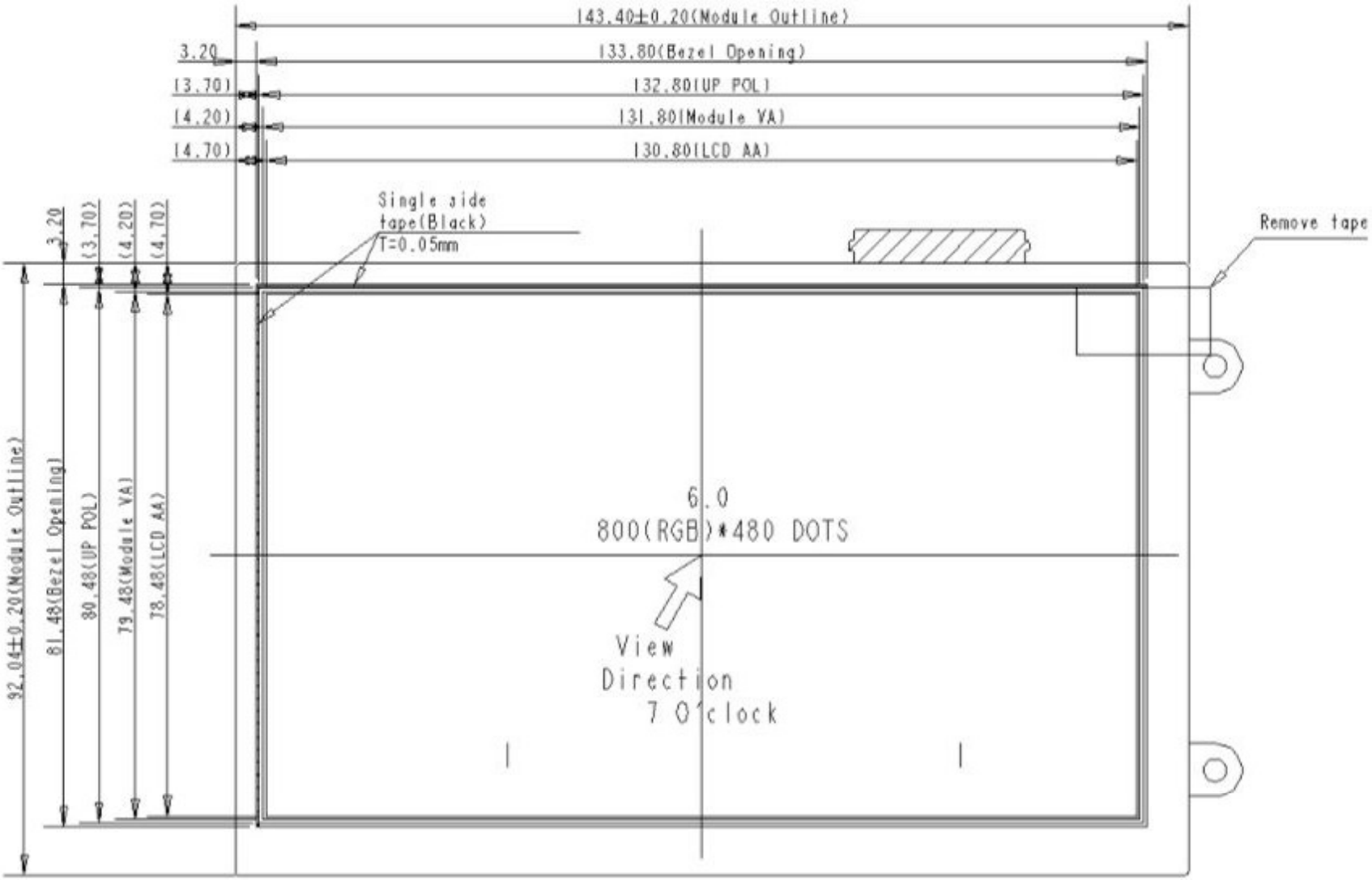
143.40±0.20(Module Outline)
3.20
133.80(Bezel Opening)
(3.70)
132.80(UP POL)
(4.20)
131.80(Module VA)
(4.70)
130.80(LCD AA)
Single side tape(Black) T=0.05mm
Remove tape
3.20
(3.70)
(4.20)
(4.70)
92.04±0.20(Module Outline)
81.48(Bezel Opening)
80.48(UP POL)
79.48(Module VA)
78.48(LCD AA)
6.0
800(RGB)*480 DOTS
View Direction 7 O'clock

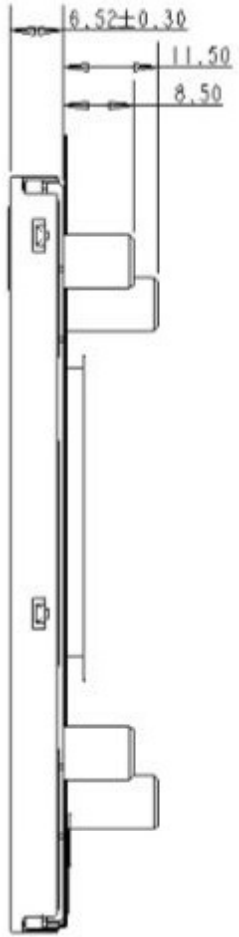
6.52±0.30
11.50
8.50