Streamax

AD Plus2.0

Specifications

Streamax Technology CO.,Ltd.

Preface

The Specifications describe the product components and parameter meaning of AD Plus2.0, and the contents involved like text, figures, and graphics belong to Shenzhen Streamax Technology Co., Ltd. No part of the Specifications may be extracted, reproduced, translated, or modified in any form or by any means without the prior written consent of Shenzhen Streamax Technology Co., Ltd. Unless otherwise specified, the Specifications are provided without representations or warranties of any kind.

About the Specifications:

The Specifications are intended to provide guidance for authorized users and technical support personnel of the product.

The product pictures and screen contents provided herein are for illustration only. The physical product (including but not limited to its appearance, color, and size) may differ from the displayed contents (including but not limited to the background, UIs, and pictures). Please refer to the physical product.

The figures contained herein are theoretical values obtained from the internal laboratory of Streamax Technology in a specific test environment (refer to the specific instructions). These figures may vary slightly in actual use due to the individual product differences, software version, service condition, and environmental factors.

With the real-time changes in product batches and production-supply factors, in order to provide product information, features, specifications, and parameters as accurate as possible, Streamax may adjust and modify the text, pictures, and other contents in the Specifications from time to time to match with the actual performance, specification, indexes, components, and other information of the product. Such changes and necessary adjustments may be made without special notice.

Trademark Statement:

Streamax is the registered trademark of Streamax Technology. All other trademarks mentioned in this Specifications are the property of their respective holders.

Responsibility Statement:

To the maximum extent permitted by applicable law, the products described in this Specifications (including their hardware, software, firmware, etc.) are provided

Specifications

"AS Available" with possible flaws, errors, or faults. Streamax makes no warranties, express or implied, including but not limited to merchantability, quality satisfaction, fitness for particular purposes, or no infringement on the rights of third parties. The use of the Specifications or products of Streamax is at your own risk. In no event will Streamax be liable to you for any special, consequential, incidental, or indirect damages, including but not limited to damages for loss of business profits, or loss of data or documentation, in connection with such use.

You acknowledge that the nature of the Internet provides for inherent security risks, and Streamax shall not take any responsibilities for abnormal operation, data leakage, or other damages resulting from cyber-attack, hacker attack, virus infection, or other Internet security risks; however, Streamax will provide timely technical support if required.

You agree to use this product in compliance with all applicable laws. Streamax shall not take any responsibility for the product being used to infringe on the rights of a third party or for other improper purposes.

In the event of any conflicts between the Specifications and the applicable laws, the latter prevails.

Copyright © 2022 Shenzhen Streamax Technology Co., Ltd. All right reserved.

Read the Specifications before using the product, to ensure that you will use the product correctly and all necessary functions will work properly.

Warning: conditions that may involve the safety of the device user or injure the device user

Important: conditions that may damage data integrity or firmware or hardware of the device

Note: additional descriptions, explanations of terms, etc.

Contents

1. PRODUCT INTRODUCTION 1

2. FUNCTIONS AND FEATURES 1

2.1 AI FUNCTION 2

2.1.1 ADAS FUNCTIONS *2*

2.1.2 DSC FUNCTIONS *2*

2.1.3 DMS FUNCTIONS (OPTIONAL) *3*

3. SPECIFICATIONS 3

4. DIMENSIONAL DRAWINGS (UNIT: MM) 10

5. SYSTEM CONNECTION DIAGRAM 10

5.1 CONNECTION DIAGRAM OF ACC POWER SUPPLY SYSTEM 11

5.2 CONNECTION DIAGRAM OF OBD POWER SUPPLY SYSTEM 11

5.3 CABLE CONNECTOR PINOUTS 11

5.3.1 POWER SUPPLY BOX CONNECTOR PINOUT *12*

5.3.2 STANDARD POWER CABLE CONNECTOR PINOUT *12*

5.3.3 OBD POWER CABLE CONNECTOR PINOUT *13*

5.3.4 VIDEO OUTPUT CABLE CONNECTOR PINOUT *13*

6. NOTICE 14

Abbreviations Explanation

Abbr.	Full Name
1920P	Resolution ratio 2560×1920
ADAS	Advanced Driving Assistance System
DSC	Driving Safety Cockpit
DMS	Driver Monitoring System
VBR	Variable Bit Rate
CBR	Constants Bit Rate
LDW	Lane Departure Warning
HMW	Headway Monitoring Warning
FCW	Forward Collision Warning

1. Product Introduction

AD Plus2.0 is an AI dashcam that helps drivers to reduce traffic accidents and facilitates fleets to improve management efficiency. Based on AI technology, it can actively detect risky driving events and unsafe driving behaviors, supporting sending local real-time reminders to the driver to avoid risks and uploading events to the fleet management platform for driver training. It transmits real-time and accurate vehicle position information and operation data to the fleet management platform. It provides high-quality remote intercom and video live view playback to make the fleet management easier and more efficient.

2. Functions and Features

- Ultra-wide 140° DFOV road facing lens, supporting up to 1920P QHD video recording
- Ultra-wide 170° DFOV driver facing lens, supporting up to 1080P HD video recording
- Support up to 4-channel video recording
- H.264/H.265 encoding
- 2 x 512GB dual-Micro SD card storage, supporting the simultaneous storage of main streams and sub streams
- Built-in Wi-Fi, 4G communication module, and inertial navigation positioning module
- AES256 encryption for video/audio data, encryption protocol TLS1.3 for data transmission
- 4-channel IO input, 1-channel CAN and 1-channel RS232
- Compact design, not affecting the driver's sight regardless of vehicle size
- OBD power supply, easy installation
- Built-in ADAS function, supporting lane departure warning (LDW), forward collision warning (FCW), and headway monitoring warning (HMW)
- Built-in DSC function, supporting the detection of unsafe driving behaviors

All rights reserved.

- Support echo & noise canceling algorithm to improve the quality of two-way audio communication
- Sleep mode, remote wakeup
- Built-in 6-axis gravity sensor, supporting rapid acceleration, rapid deceleration, harsh cornering, and accident detection
- supports expansion of OBD data reading and expansion of video channels and AI capabilities by replacing the standard power box with Power Box Plus or Power Box Max

2.1 AI Function

AD Plus2.0 uses machine vision based on video analysis technology to automatically identify road risks and drivers' unsafe driving behaviors. Any detected event will trigger audible and visual reminders to remind drivers in real time, and the event videos can also be uploaded to the cloud.

Warning: AI function must be calibrated and configured in strict accordance with the installation and operation instructions, otherwise, the AI function cannot work properly.

2.1.1 ADAS functions

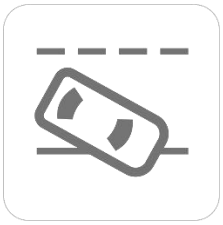

LDW

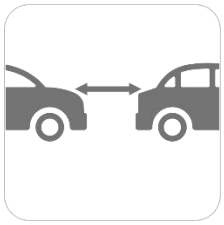

HMW

FCW

2.1.2 DSC functions

Lens Covered

Yawning

Handheld Devices

Smoking

All rights reserved.

Distraction

No Driver

Unfasten seat belt

2.1.3 DMS functions (optional)

DMS

Driver prompter (R-Watch)

Lens Covered

Yawning

Handheld Devices

Smoking

Distraction

No driver

Unfastened seat belt

Fatigue driving

3. Specifications

Product model: AD Plus2.0	
System	Embedded Linux
Language	Options: Chinese, English, Spanish (Latin American), Portuguese (Latin American), French, Russian and Japanese. Default: English.

All rights reserved.

	* The language includes interface language and voice reminder. TTS supports Chinese and English only.
Video/Audio	
Video/Audio Recording	4-channel video (default: 2 channels; extension: 2 channels) + 1-channel audio
Max. Capability (with 2-channel AI)	1920P@25fps (ADAS)+1080P@25fps (DSC)+1080P@25fps (AHD) +800P@20fps (DMS) Recommended configuration (1920P@20fps+1080P@15fps+1080P@20fps (AHD) +800P@20fps (IPC))
Image Setup	Adjustable brightness, chroma, contrast, color saturation, and sharpness
Video Coding	Options: H.264 and H.265. Default: H.265
Audio Compression Standard	Options: ADPCM, G.711, and G.726. Default: ADPCM
CBR/VBR	Options: VBR and CBR. Default: VBR
Audio	Built-in MIC
Loudspeaker	Built-in speaker, power: 3W, with adjustable volume, not less than 70 dB at 1 m distance
Parameters of road facing lens	
Sensor Type	1/2.7" 5-megapixel CMOS sensor
Shutter Speed	1/30s~1/100000s
Lens	Focal length: 2.8 mm HFOV: 123°; VFOV: 65°; DFOV: 140°; Deviation: ±5°
Minimum Illuminance	Color: 0.05 Lux/F1.2
Lens Mount	built-in lens
Wide Dynamic	Digital WDR

All rights reserved.

Specifications

Range (WDR)	
Backlight Compensation	Supported
Signal-to-Noise Ratio (S/N)	≥48dB
Parameters of driver facing lens	
Sensor Type	1/2.9" 2-megapixel CMOS sensor
Shutter Speed	1/30s~1/100000s
Lens	Focal length: 2.2 mm HFOV: 151°; VFOV: 84°; DFOV: 170°; Deviation: ±5°
Lens Mount	Built-in lens
Wide Dynamic Range (WDR)	Digital WDR
Backlight Compensation	Supported
Signal-to-Noise Ratio (S/N)	≥45db
Infrared Lamp	Supported. The built-in environmental light sensor turns on/off the lamp automatically * Threshold: 4 lux from daytime to night, and 8 lux from night to daytime. There may be some deviations for different devices. Please refer to the actual measurements.
LED Indicator Status	
Power Status Lights	Off/Green Off: The device is not powered on Steady green: The device is powered normally
Alarm Indicator	Off/Red

All rights reserved.

	Off: The device does not generate any alarm Red flashes three times: The device generates an alarm
GPS Signal Indicator	Off/Red Off: The device positioning runs normally Steady red: The device positioning runs abnormally (not positioned, or module not connected or damaged) Red flash (once per second): The device positioning is poor
Network Status Indicator	Off/Red Off: The device is connected to the server normally Steady red: The device is connected to the server abnormally Red flash (once per second): The device is in airplane mode * Airplane mode: Turning off the network signal of the dashcam to ensure safety when the vehicle enters the gas station.
Wi-Fi Status Indicator	Off/Red/Green Off: The device is in Disable or Client mode Steady green: The device is in AP mode Steady red: The device Wi-Fi runs abnormally
Recording Status Indicator	Off/Red Off: The built-in or extended camera runs normally Steady red: The built-in or extended camera stops (including privacy mode)/fails * When the video recording function is enabled (main stream and sub stream), the prompt will be given if no recording is detected. If the video recording function is disabled (main stream and sub stream), it will be regarded as normal recording status.
Storage	
Micro SD card	Micro SD card×2, (SDXC 32GB/64GB/128GB/256GB/512GB)

All rights reserved.

	Read/write rate: Class10 or above is recommended
Sensor	
Six-axis Sensor	Harsh acceleration, Harsh deceleration, Harsh cornering, and accident detection
Environmental Light Sensor	Supported, used as the cockpit camera, subject to day/night switching
Port	
RS232	1-channel
I/O Port	4-channel input
CAN	1-channel (standard J1939 protocol) Warning: As some data fields may be customized by automobile manufacturers, the final measured data shall prevail. In the event that any required data is not supported, the integrated development is acceptable based on a specific protocol.
USB	1 × mini USB port
Button	1 To switch Wi-Fi to AP mode, press the button twice within 2s. * For details of other buttons, refer to the user manual of the product.
Network	
Wi-Fi	Support 2.4G (IEEE Std.802.11a/IEEE Std.802.11b/IEEE Std.802.11g /IEEE Std.802.11n)
4G	Plug-in SIM card (Nano SIM card), V1.1 version reserved eSIM patch position, can support pre-burn-in eSIM. ● For North America: LTE FDD: B2/B4/B5/B12/B13/B14/B66/B71 WCDMA: B2/B4/B5 ● For Europe and Asia:

All rights reserved.

	LTE FDD: B1/B3/B7/B8/B20/B28A WCDMA: B1/B8 GSM: B3/B8 ● For Latin America: LTE FDD: B1/B2/B3/B4/B5/B7/B8/B28 LTE TDD: B40 WCDMA: B1/B2/B5/B8 GSM: B2/B3/B5/B8 Warning: The industrial SIM card (MP2) is required, and the ordinary SIM card (MP1) is prohibited. We are not responsible for any problem caused by the use of any ordinary SIM card.
Positioning	
GNSS	Supported GPS L1 1575.42MHz GALILEO E1B/C1 GLONASS L1OF 1602MHz SBAS: WAAS, EGNOS, MSAS, GAGAN
Power Related	
Power supply	12V and 24V vehicles (self-adaptive)
Power consumption	● In standby mode：13.5V@5.67mA, 27V@3.39mA ● In sleep mode (4G and MCU powered)：13.5V@62~124mA, 27V@32~61mA ● Typical power consumption (with dual SD cards installed and SIM card for dialing): about 7.56W ● Full-load power consumption (with dual SD cards installed, SIM card for dialing, Wi-Fi turned on, IPC and AHD connected, and infrared lamp

All rights reserved.

	turned on): about 12.66W * The above data are test data obtained in a specific environment in the laboratory, and may vary with the individual product differences, service environment, and testing methods.
Environment	
Operating Temperature	-40°C ~ +70°C (-40°F ~ +158°F)
Storage Temperature	-40°C ~ +85°C (-40°F ~ +185°F)
Operating Humidity	15~95% non-condensing
Storage Humidity	15~95% non-condensing
IP Rating	IP30 * The Dashcam is non-waterproof
Dimensions and Weight	
Dimensions L×W×H	Dashcam: 116.5 mm×67.8 mm×88.2 mm (excluding bracket); Deviation: ±2 mm Package: 176 mm×150 mm×114 mm; Deviation: ±3 mm
Weight	Net weight (device only): 315g Gross weight (including accessories and package): 734.5g Deviation: ±10g
* The actual dimensions and weight may vary with the individual product differences, manufacturing processes, and testing methods.	
Package Contents	
AD Plus2.0 ×1, power supply box ×1, standard power cable ×1, Allen key ×1, mounting bracket ×1, bracket bolt ×1, crowbar ×1, desiccant ×1, and alcohol cotton×1	

All rights reserved.

* The configuration may vary in different regions.

4. Dimensional Drawings (Unit: mm)

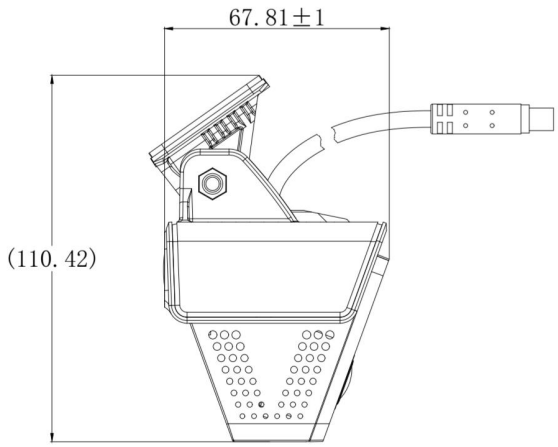

Left view

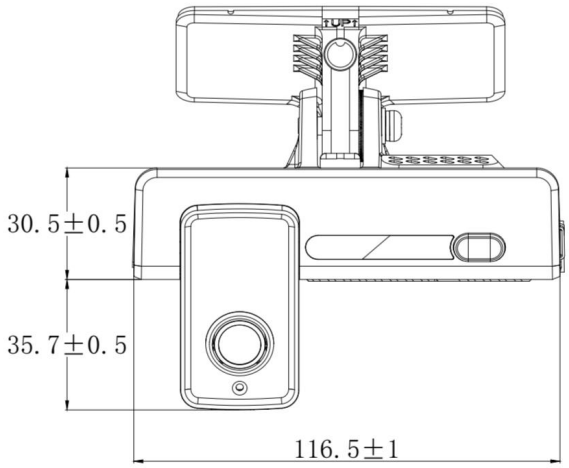

Front view

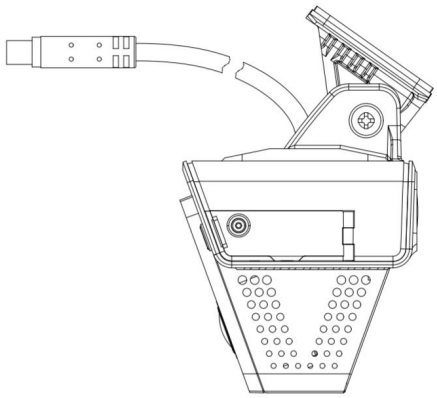

Right view

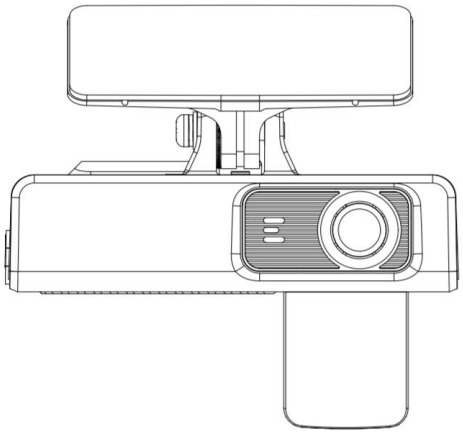

Rear view

5. System Connection Diagram

The standard packing list contains a standard power cable that supports ACC power supply and vehicle connection. You can select OBD power cable which support OBD power supply and vehicle connection.

All rights reserved.

Specifications

5.1 Connection Diagram of ACC Power Supply System

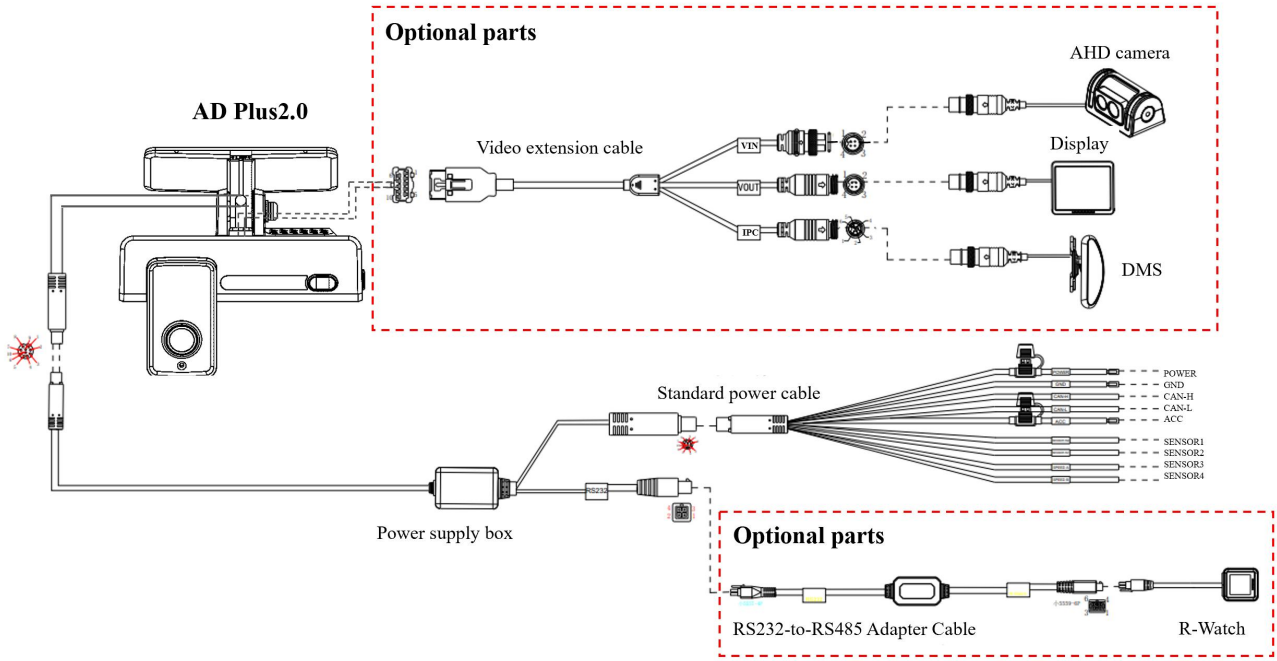

5.2 Connection Diagram of OBD Power Supply System

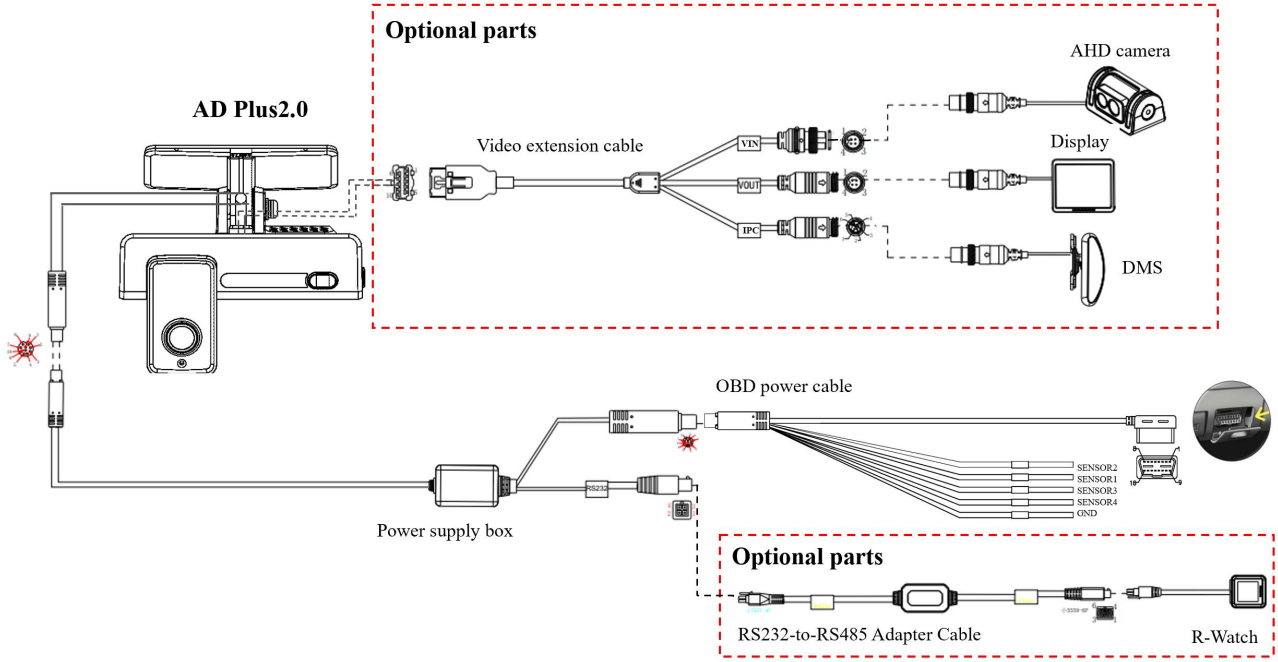

5.3 Cable Connector Pinouts

All rights reserved.

Specifications

5.3.1 Power Supply Box Connector Pinout

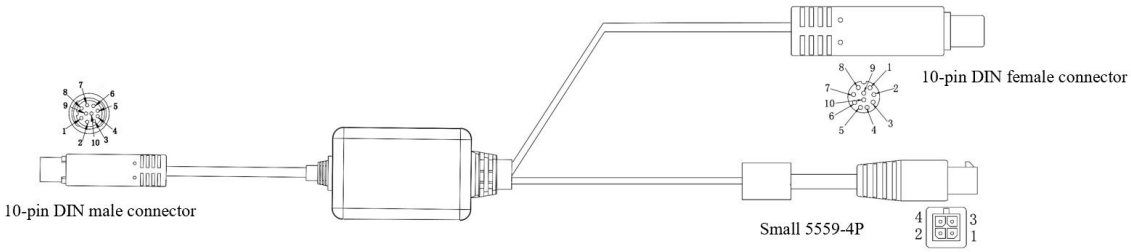

Pinout

TJC3-12PIN-P1.25		10-pin DIN male connector	
1+2	10	DC+	Red+Red-White
3+4	9	DC-	Black+Black-White
5	8	TX	White
6	7	RX	Brown
7	6	SIN1	Purple
8	5	SIN2	Blue
9	4	3.3V	Gray
10	3	CAN-H	Green
11	2	CAN-L	Yellow
12	1	ACC	Orange

Pinout

TJC3-12PIN-P1.25		10-pin DIN female connector	
1+2	10	GND	Black+Black-White
3+4	3	24V+	Red+Red-White
7	5	SIN1	Purple
8	7	SIN2	Brown
10	2	CAN-H	Green
11	1	CAN-L	Yellow
12	8	SIN3	Blue
13	9	SIN4	Gray
14	6	ACC	Orange
15	4	OBD-CHK	White

Pinout

TJC3-2PIN-P1.25		Small 5559-4P	
1	1	+12V	Pink
2	3	+5V	Blue-White
TJC3-15PIN-P1.25		**Small 5559-4P**	
9	7	GND	Black
6	2	232TX	Green
5	1	232RX	Yellow

5.3.2 Standard Power Cable Connector Pinout

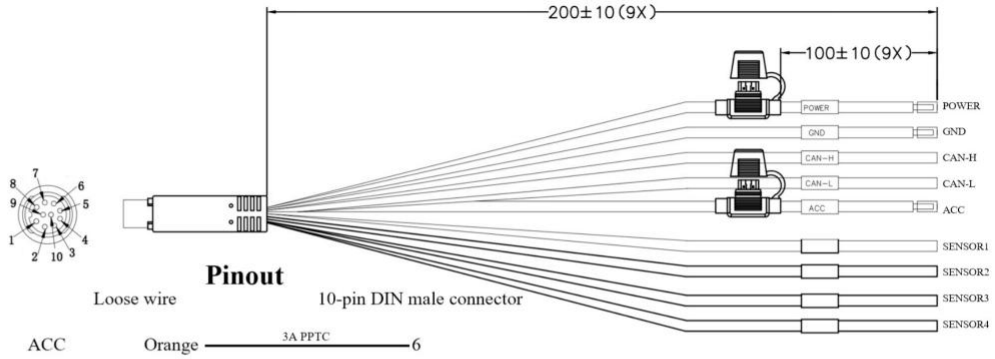

Pinout

	Loose wire			10-pin DIN male connector
semi-stripped	ACC	Orange	3A PPTC	6
	CAN-L	Green		1
	CAN-H	Yellow		2
	SENSOR IN3	Blue		8
	SENSOR IN2	Green-Yellow		7
	SENSOR IN1	Gray		5
	SENSOR IN4	Green-Black		9
semi-stripped	POWER	Red	3A PPTC	3
semi-stripped	GND	Black		10

All rights reserved.

5.3.3 OBD Power Cable Connector Pinout

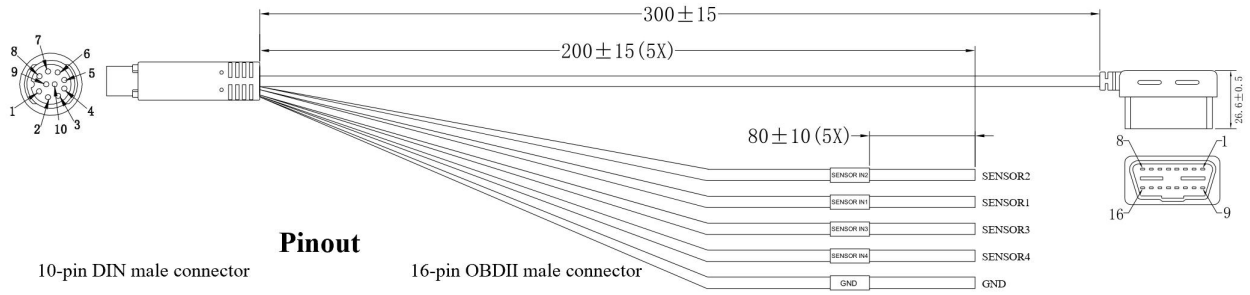

Pinout

10-pin DIN male connector				16-pin OBDII male connector
GND	Black	10+4		4+5
CAN-H	Green	2		6
CAN-L	Yellow	1		14
POWER	Red	3	3A PPTC	16
SENSOR IN3	Green-Yellow	8		
SENSOR IN2	Blue	7		
SENSOR IN1	Gray	5		
SENSOR IN4	Green-Black	9		
GND	Black	10		

5.3.4 Video Output Cable Connector Pinout

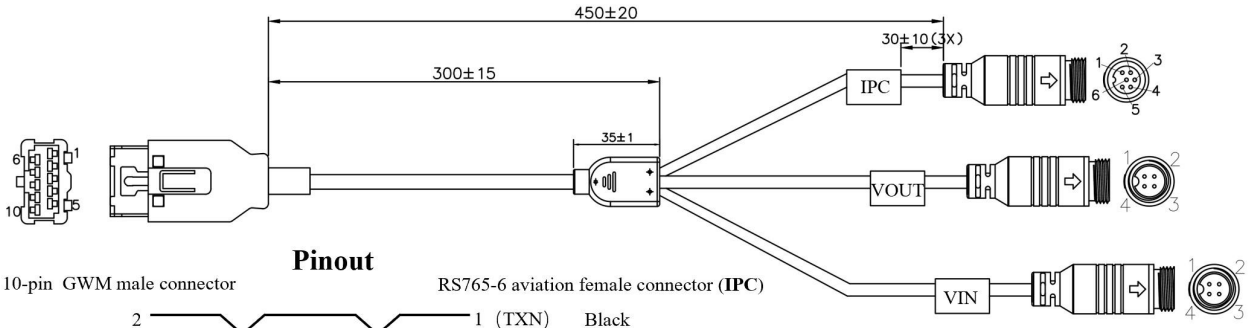

Pinout

10-pin GWM male connector	RS765-6 aviation female connector (**IPC**)	
2	1 (TXN)	Black
7	2 (TXP)	White
1	4 (RXN)	Brown
6	5 (RXP)	Orange
10	3 (VCC)	Red
3	6 (GND)	Gray
shell	shell	(Ground)×3

10-pin GWM male connector	RS765-4 aviation male connector (**VOUT**)	
4	4 (VOUT)	Yellow
5+9	2 (GND)	Shield

10-pin GWM male connector	RS765-4 aviation male connector (**VIN**)	
8	4 (VOUT)	Green
3	2 (GND)	Shield
10	1 (+12V)	Purple

All rights reserved.

6. Notice

1) The product needs to be installed by professionals, otherwise, there may be a risk of electric shock, damage to vehicle lines, impact on AI experience and device falling-off.
2) The surface temperature may exceed 60°C when the product is in use under direct sunlight. Please do not touch the surface exposed to direct sunlight to avoid burns.
3) The extended AHD channel does not support audio input.
4) The extended screen output does not support audio, and does not support IPC channel screen preview.

FCC Requirement

Any changes or modifications not expressly approved by the party responsible for compliance could void the user’s authority to operate the equipment.

This device complies with Part 15 of the FCC Rules. Operation is subject to the following two conditions:

(1) this device may not cause harmful interference, and

(2) this device must accept any interference received, including interference that may cause undesired operation.

This transmitter must not be co-located or operating in conjunction with any other antenna or transmitter.

Note: This equipment has been tested and found to comply with the limits for a Class B digital device, pursuant to Part 15 of the FCC Rules. These limits are designed to provide reasonable protection against harmful interference in a residential installation. This equipment generates, uses, and can radiate radio frequency energy, and if not installed and used in accordance with the instructions, may cause harmful interference to radio communications. However, there is no guarantee that interference will not occur in a particular installation. If this equipment does cause

All rights reserved.

harmful interference to radio or television reception, which can be determined by turning the equipment off and on, the user is encouraged to try to correct the interference by one or more of the following measures:

- Reorient or relocate the receiving antenna.
- Increase the separation between the equipment and receiver.
- Connect the equipment into an outlet on a circuit different from that to which the receiver is connected.
- Consult the dealer or an experienced radio/TV technician for help.

This device complies with FCC radiation exposure limits set forth for an uncontrolled environment. This device should be installed and operated with minimum distance 20cm between the radiator & your body.

All rights reserved.

Streamax

Building a Brighter Future of Transportation with Technology

Streamax Technology Co., Ltd.

Address: 21-23/F B1 Building, Zhiyuan, No.1001 Xueyuan Avenue, Nanshan District Shenzhen City, Guangdong Province, P.R.China

Website：en.streamax.com