FCC SAR Compliance Test Report

For

Grupo Solone

Av Lomas de Sotelo 1112.Miguel Hidalgo.Ciudad de Mexico

Model: Sun_S5501

Test Engineer:	Lily Zhao
Report Number:	FCC17070749A-SAR
Report Date:	2017-07-10
FCC ID:	2AM6QSUNS5501
Check By:	Stars Liang
Approved By:	Michal Ling
Prepared By:	QTC Certification & Testing Co., Ltd. 2nd Floor,Bl Building,Fengyeyuan Industrial Plant,, Liuxian 2st. Road, Xin'an Street, Bao'an District,,Shenzhen,518000 Tel: +86-755-26996144 EXT:8164 Fax: +86-755-26996253

Table of contents

1 General information 4
1.1 Notes 4
1.2 Application details 4
1.3 Statement of Compliance 5
1.4 EUT Information 6
2 Testing laboratory 7
3 Test Environment 7
4 Applicant and Manufacturer 7
5 Test standard/s: 8
5.1 RF exposure limits 9
5.2 SAR Definition 9
6 SAR Measurement System 10
6.1 The Measurement System 10
6.2 Robot 11
6.3 Probe 11
6.4 Measurement procedure 12
6.5 Description of interpolation/extrapolation scheme 12
6.6 Phantom 13
6.7 Device Holder 14
6.8 Video Positioning System 15
6.9 Tissue simulating liquids: dielectric properties 16
6.10 Tissue simulating liquids: parameters 17
7 System Check 18
7.1 System check procedure 18
7.2 System check results 19
8 SAR Test Test Configuration 20
8.1 GSM Test Configurations 20
8.2 Wi-Fi Test Configuration 20
9 Detailed Test Results 21
9.1 Conducted Power measurements 21
9.1.1 Conducted Power of GSM850 21

9.1.2 Conducted Power of GSM1900 22
9.1.3 Conducted Power of UMTS Band II 23
9.1.4 Conducted Power of UMTS Band V 24
9.1.5 Conducted Power of Wi-Fi 2.4G 25
9.1.6 Conducted Power of BT 25
9.1.7 Tune-up power tolerance 26
9.2 SAR test results 27
9.2.1 Results overview of GSM850 29
9.2.2 Results overview of GSM1900 30
9.2.3 Results overview of UMTS Band II 31
9.2.4 Results overview of UMTS Band V 32
9.2.5 Results overview of Wi-Fi 2.4G 33
10 Multiple Transmitter Information 34
10.1.1 Stand-alone SAR test exclusion 35
10.1.2 Simultaneous Transmission Possibilities 36
10.1.3 SAR Summation Scenario 37
11 Measurement uncertainty evaluation 40
11.1 Measurement uncertainty evaluation for SAR test 40
11.2 Measurement uncertainty evaluation for system check 41
12 Test equipment and ancillaries used for tests 42
Annex A: System performance verification 43
Annex B: Measurement results 43
Annex C: Calibration reports 43
Annex D: Photo documentation 44

Modified History

REV.	Modification Description	Issued Date	Remark
REV.1.0	Initial Test Report Relesse	2017-07-10	Stars Liang

1 General information

1.1 Notes

The test results of this test report relate exclusively to the test item specified in this test report. Shenzhen Timeway Testing Laboratories QTC Certification & Testing Co., Ltd.generalisations drawn from the test results with regard to other specimens or samples of the type of the equipment represented by the test item. The test report is not to be reproduced or published in full without the prior written permission.

1.2 Application details

Date of receipt of test item: 2017-06-21
Start of test: 2017-07-21
End of test: 2017-07-10

1.3 Statement of Compliance

The maximum results of Specific Absorption Rate (SAR) found during testing for Sun_S5501 is as below:

Band	Position	MAX Reported SAR_{1g} (W/kg)
GSM850	Head	0.007
	Body & Hotspot 10mm	0.048
GSM1900	Head	0.159
	Body & Hotspot 10mm	**0.798**
UMTS Band II	Head	**0.171**
	Body & Hotspot 10mm	0.569
UMTS Band V	Head	0.146
	Body & Hotspot 10mm	0.139
Wi-Fi 2450	Head	0.091
	Body & Hotspot 10mm	0.085
The highest simultaneous SAR is 0.843W/kg per KDB690783 D01		

The device is in compliance with Specific Absorption Rate （SAR）for general population/uncontraolled exposure limits of 1.6 W/Kg as averaged over any 1g tissue according to the FCC rule §2.1093, the ANSI/IEEE C95.1:2005, the NCRP Report Number 86 for uncontrolled environment, according to the Industry Canada Radio Standards Specification RSS-102 for General Population/Uncontrolled exposure, and had been tested in accordance with the measurement methods and procedures specified in IEEE Std 1528-2013.

1.4 EUT Information

Device Information:			
Product Type:	Mobile phone		
Model:	Sun_S5501		
Brand Name:	SOLONE		
Device Type:	Portable device		
Exposure Category:	uncontrolled environment / general population		
Production Unit or Identical Prototype:	Production Unit		
Hardware version:	V5501_1_50		
Software version :	SOLONE_SUN_S5501_SW_V08		
Antenna Type :	Internal Antenna		
Device Operating Configurations:			
Supporting Mode(s) :	GSM850/1900, UMTS Band II /V,Wi-Fi , BT		
Modulation:	GMSK, OFDM/CCK, GFSK/π/4-DQPSK/ 8-DPSK		
Device Class :	Class B, No DTM Mode		
Operating Frequency Range(s)	Band	TX(MHz)	RX(MHz)
	GSM850	824~849	869~894
	GSM1900	1850~1910	1930~1990
	UMTS Band II	1850~1910	1930~1990
	UMTS Band V	824~840	869~894
	Wi-Fi	2412~2462	2412~2462
	BT	2402~2480	2402~2480
GPRS class level:	GPRS class 12		
Test Channels (low-mid-high):	128-190-251(GSM850)		
	512-661-810(GSM1900)		
	9262-9400-9538(UMTS Band II)		
	4132-4182-4233(UMTS Band V)		
	1-6-11 (Wi-Fi)		
	0-39-78(BT)		
Power Source:	3.8 VDC/2800mAh Rechargeable Battery		

2 Testing laboratory

Test Site	QTC Certification & Testing Co., Ltd.
Test Location	2nd Floor,Bl Building,Fengyeyuan Industrial Plant,, Liuxian 2st. Road, Xin'an Street, Bao'an District,,Shenzhen,518000
Telephone	+86-755-26996144 EXT:8164
Fax	+86-755-26996253

3 Test Environment

	Required	Actual
Ambient temperature:	18 – 25 °C	22 ± 2 °C
Tissue Simulating liquid:	22 ± 2 °C	22 ± 2 °C
Relative humidity content:	30 – 70 %	30 – 70 %

4 Applicant and Manufacturer

Applicant/Client Name:	Grupo Solone
Applicant Address:	Av Lomas de Sotelo 1112.Miguel Hidalgo.Ciudad de Mexico
Manufacturer Name:	Grupo Solone
Manufacturer Address:	Av Lomas de Sotelo 1112.Miguel Hidalgo.Ciudad de Mexico

5 Test standard/s:

ANSI Std C95.1-2005	Safety Levels with Respect to Human Exposure to Radio Frequency Electromagnetic Fields, 3 kHz to 300 GHz.
IEEE Std 1528-2013	Recommended Practice for Determining the Peak Spatial-Average Specific Absorption Rate (SAR) in the Human Head from Wireless Communications Devices: Measurement Techniques
RSS-102	Radio Frequency Exposure Compliance of Radiocommunication Apparatus (All Frequency Bands (Issue 5 March 2015)
KDB447498 D01	General RF Exposure Guidance v06
KDB648474 D04	Head set SAR v01r03
KDB941225 D06	Hot Spot SAR V02r01
KDB941225 D01	3G SAR Measurement Procedures
KDB248227 D01	SAR meas for 802.11 a/b/g v01r02
KDB865664 D01	SAR Measurement 100 MHz to 6 GHz v01r04
KDB865664 D02	RF Exposure Reporting v01r02

5.1 RF exposure limits

Human Exposure	Uncontrolled Environment General Population	Controlled Environment Occupational
Spatial Peak SAR* (Brain/Body/Arms/Legs)	**1.60 mW/g**	8.00 mW/g
Spatial Average SAR** (Whole Body)	0.08 mW/g	0.40 mW/g
Spatial Peak SAR*** (Heads/Feet/Ankle/Wrist)	4.00 mW/g	20.00 mW/g

The limit applied in this test report is shown in bold letters

Notes:

* The Spatial Peak value of the SAR averaged over any 1 gram of tissue (defined as a tissue volume in the shape of a cube) and over the appropriate averaging time.

** The Spatial Average value of the SAR averaged over the whole body.

*** The Spatial Peak value of the SAR averaged over any 10 grams of tissue (defined as a tissue volume in the shape of a cube) and over the appropriate averaging time.

Uncontrolled Environments are defined as locations where there is the exposure of individuals who have no knowledge or control of their exposure.

Controlled Environments are defined as locations where there is exposure that may be incurred by persons who are aware of the potential for exposure, (i.e. as a result of employment or occupation.

5.2 SAR Definition

Specific Absorption Rate is defined as the time derivative (rate) of the incremental energy (dW) absorbed by(dissipated in) an incremental mass (dm) contained in a volume element (dV) of a given density (ρ).

$$SAR = \frac{d}{dt}\left(\frac{dW}{dm}\right) = \frac{d}{dt}\left(\frac{dW}{\rho dV}\right)$$

SAR is expressed in units of watts per kilogram (W/kg). SAR can be related to the electric field at a point by

$$SAR = \frac{\sigma |E|^2}{\rho}$$

where:

σ = conductivity of the tissue (S/m)

ρ = mass density of the tissue (kg/m^3)

E = rms electric field strength (V/m)

6 SAR Measurement System

6.1 The Measurement System

Comosar is a system that is able to determine the SAR distribution inside a phantom of human being according to different standards. The Comosar system consists of the following items:

- Main computer to control all the system
- 6 axis robot
- Data acquisition system
- Miniature E-field probe
- Device holder
- Head simulating tissue

The following figure shows the system.

The EUT under test operating at the maximum power level is placed in the phone holder, under the phantom, which is filled with head simulating liquid. The E-Field probe measures the electric field inside the phantom. The OpenSAR software computes the results to give a SAR value in a 1g or 10g mass.

6.2 Robot

The COMOSAR system uses the high precision robots KR 6 R900 sixx type out of the newer series from Satimo SA (France).For the 6-axis controller COMOSAR system, the KUKA robot controller version from Satimo is used. The KR 6 R900 sixx robot series have many features that are important for
our application:

- High precision (repeatability 0.02 mm)
- High reliability (industrial design)
- Jerk-free straight movements
- Low ELF interference (the closed metallic construction shields against motor control fields)
- 6-axis controller

6.3 Probe

For the measurements the Specific Dosimetric E-Field Probe SSE 5 with following specifications is used

- Dynamic range: 0.01-100 W/kg
- Tip Diameter : 5 mm
- Distance between probe tip and sensor center: 2.5mm
- Distance between sensor center and the inner phantom surface: 4 mm (repeatability better than +/- 1mm)
- Probe linearity: ＜0.25 dB
- Axial Isotropy: ＜0.25 dB
- Spherical Isotropy: ＜0.50 dB
- Calibration range: 300 to 3G for head & body simulating liquid.

Angle between probe axis (evaluation axis) and suface normal line:less than 30°

6.4 Measurement procedure

The following steps are used for each test position

- Establish a call with the maximum output power with a base station simulator.The connection between the mobile and the base station simulator is established via air interface.
- Measurement of the local E-field value at a fixed location.This value serves as a reference value for calculating a possible power drift.
- Measurement of the SAR distribution with a grid of 8 to 16 mm * 8 to 16 mm and a constant distance to the inner surface of the phantom.Since the sensors can not directly measure at the inner phantom surface,the values between the sensors and the inner phantom surface are extrapolated.With these values the area of the maximum SAR is calculated by an interpolation scheme.
- Around this point,a cube of 30 * 30 * 30 mm or 32 * 32 * 32 mm is assessed by measuring 5 or 8 * 5 or 8 * 4 or 5 mm.With these data,the peak spatial-average SAR value can be calculated.

6.5 Description of interpolation/extrapolation scheme

- The local SAR inside the phantom is measured using small dipole sensing elements inside a probe body.The probe tip must not be in contact with the phantom surface in order to minimise measurements errors,but the highest local SAR will occur at the surface of the phantom.

- An extrapolation is using to determinate this highest local SAR values.
  The extrapolation is based on afourth-order least-square polynomial fit of measured data.The local SAR value is then extrapolated from the liquid surface with a 1 mm step.

- The measurements have to be performed over a limited time(due to the duration of the battery) so the step of measurement is high.It could vary between 5 and 8 mm.To obtain an accurate assessment of the maximum SAR average over 10 grams and 1gram requires a very fine resolution in the three dimensional scanned data array.

6.6 Phantom

For the measurements the Specific Anthropomorphic Mannequin (SAM) defined by the IEEE SCC-34/SC2 group is used. The phantom is a polyurethane shell integrated in a wooden table. The thickness of the phantom amounts to 2mm +/- 0.2mm. It enables the dosimetric evaluation of left and right phone usage and includes an additional flat phantom part for the simplified performance check. The phantom set-up includes a cover, which prevents the evaporation of the liquid.

System Material	Permittivity	Loss Tangent
Delrin	3.7	0.005

6.7 Device Holder

The positioning system allows obtaining cheek and tilting position with a very good accuracy. In compliance with CENELEC, the tilt angle uncertainty is lower than 1°.

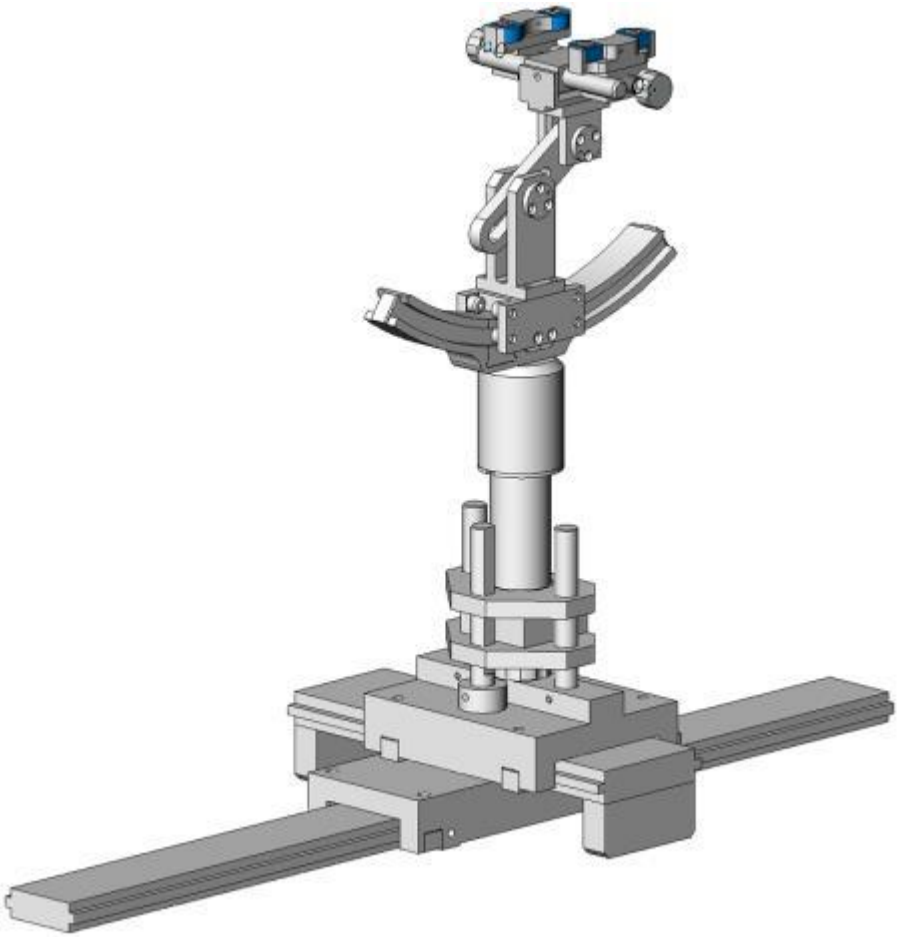

Device holder

System Material	Permittivity	Loss Tangent
Delrin	3.7	0.005

6.8 Video Positioning System

- The video positioning system is used in OpenSAR to check the probe. Which is composed of a camera, LED, mirror and mechanical parts. The camera is piloted by the main computer with firewire link.

- During the process, the actual position of the probe tip with respect to the robot arm is measured, as well as the probe length and the horizontal probe offset. The software then corrects all movements, such that the robot coordinates are valid for the probe tip.

- The repeatability of this process is better than 0.1 mm. If a position has been taught with an aligned probe, the same position will be reached with another aligned probe within 0.1 mm, even if the other probe has different dimensions. During probe rotations, the probe tip will keep its actual position.

6.9 Tissue simulating liquids: dielectric properties

The following materials are used for producing the tissue-equivalent materials.

(Liquids used for tests are marked with☒):

Ingredients(% of weight)	**Frequency (MHz)**				
frequency band	☐ 450	☒ 835	☐ 1800	☒ 1900	☒ 2450
Tissue Type	Head	Head	Head	Head	Head
Water	38.56	41.45	52.64	55.242	62.7
Salt (NaCl)	3.95	1.45	0.36	0.306	0.5
Sugar	56.32	56.0	0.0	0.0	0.0
HEC	0.98	1.0	0.0	0.0	0.0
Bactericide	0.19	0.1	0.0	0.0	0.0
Triton X-100	0.0	0.0	0.0	0.0	36.8
DGBE	0.0	0.0	47.0	44.542	0.0
Ingredients(% of weight)	**Frequency (MHz)**				
frequency band	☐ 450	☒ 835	☐ 1800	☒ 1900	☒ 2450
Tissue Type	Body	Body	Body	Body	Body
Water	51.16	52.4	69.91	69.91	73.2
Salt (NaCl)	1.49	1.40	0.13	0.13	0.04
Sugar	46.78	45.0	0.0	0.0	0.0
HEC	0.52	1.0	0.0	0.0	0.0
Bactericide	0.05	0.1	0.0	0.0	0.0
Triton X-100	0.0	0.0	0.0	0.0	0.0
DGBE	0.0	0.0	29.96	29.96	26.7

Salt: 99+% Pure Sodium Chloride
Sugar: 98+% Pure Sucrose
Water: De-ionized, 16MΩ+ resistivity
HEC: Hydroxyethyl Cellulose
DGBE: 99+% Di(ethylene glycol) butyl ether, [2-(2-butoxyethoxy)ethanol]
Triton X-100(ultra pure): Polyethylene glycol mono [4-(1,1,3,3-tetramethylbutyl)phenyl]ether

6.10 Tissue simulating liquids: parameters

Tissue Type	Measured Frequency (MHz)	Target Tissue		Measured Tissue		Liquid Temp.	Test Date
		ε_r (+/-5%)	σ (S/m) (+/-5%)	ε_r	σ (S/m)		
835MHz Head	825	41.60 (39.52~43.68)	0.90 (0.86~0.95)	40.34	0.91	21.6°C	2017-6-21
	835	41.50 (39.43~43.58)	0.90 (0.86~0.95)	40.33	0.92		
	850	41.50 (39.43~43.58)	0.92 (0.87~0.97)	40.11	0.94		
835MHz Body	825	55.20 (52.44~57.96)	0.97 (0.92~1.02)	54.04	0.98	21.6°C	2017-6-21
	835	55.20 (52.44~57.96)	0.97 (0.92~1.02)	53.93	0.99		
	850	55.20 (52.44~57.96)	0.99 (0.94~1.04)	53.69	1.01		
1900MHz Head	1850	40.00 (38.00~42.00)	1.40 (1.33~1.47)	39.93	1.37	21.6°C	2017-6-28
	1880	40.00 (38.00~42.00)	1.40 (1.33~1.47)	39.91	1.40		
	1900	40.00 (38.00~42.00)	1.40 (1.33~1.47)	39.98	1.41		
	1910	40.00 (38.00~42.00)	1.40 (1.33~1.47)	39.97	1.42		
1900MHz Body	1850	53.30 (50.64~55.97)	1.52 (1.44~1.60)	53.23	1.49	21.6°C	2017-6-28
	1880	53.30 (50.64~55.97)	1.52 (1.44~1.60)	53.36	1.53		
	1900	53.30 (50.64~55.97)	1.52 (1.44~1.60)	53.37	1.56		
	1910	53.30 (50.64~55.97)	1.52 (1.44~1.60)	53.37	1.57		
2450MHz Head	2410	39.30 (37.34~41.26)	1.76 (1.67~1.85)	39.22	1.78	21.6°C	2017-7-10
	2435	39.20 (37.24~41.16)	1.79 (1.70~1.88)	39.25	1.77		
	2450	39.20 (37.24~41.16)	1.80 (1.71~1.89)	39.24	1.76		
	2460	39.20 (37.24~41.16)	1.81 (1.72~1.90)	39.20	1.76		
2450MHz Body	2410	52.80 (50.16~55.44)	1.91 (1.81~2.00)	52.72	1.92	21.6°C	2017-7-10
	2435	52.70 (50.07~55.34)	1.94 (1.84~2.04)	52.75	1.92		
	2450	52.70 (50.07~55.34)	1.95 (1.85~2.05)	52.74	1.91		
	2460	52.70 (50.07~55.34)	1.96 (1.86~2.06)	52.70	1.91		
ε_r= Relative permittivity, σ= Conductivity							

7 System Check

7.1 System check procedure

The System check is performed by using a System check dipole which is positioned parallel to the planar part of the SAM phantom at the reference point. The distance of the dipole to the SAM phantom is determined by a spacer. The dipole is connected to the signal source consisting of signal generator and amplifier via a directional coupler, N-connector cable and adaption to SMA. It is fed with a power of 100 mW. To adjust this power a power meter is used. The power sensor is connected to the cable before the System check to measure the power at this point and do adjustments at the signal generator. At the outputs of the directional coupler both return loss as well as forward power are controlled during the validation to make sure that emitted power at the dipole is kept constant. This can also be checked by the power drift measurement after the test (result on plot).

System check results have to be equal or near the values determined during dipole calibration (target SAR in table above) with the relevant liquids and test system.

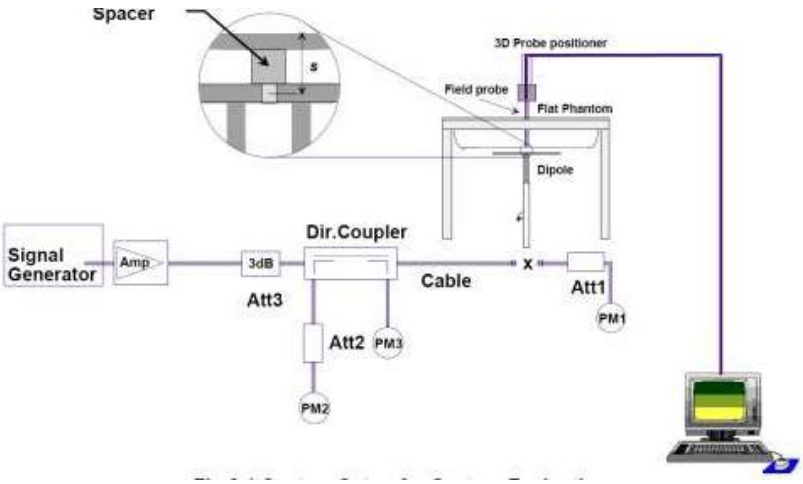

7.2 System check results

The system Check is performed for verifying the accuracy of the complete measurement system and performance of the software.The following table shows System check results for all frequency bands and tissue liquids used during the tests (plot(s) see annex A).

System Check	Target SAR (1W) (+/-10%)		Measured SAR (Normalized to 1W)		Liquid Temp.	Test Date
	1-g (mW/g)	10-g (mW/g)	1-g (mW/g)	10-g (mW/g)		
D835V2 Head	9.56 (8.60~10.52)	6.19 (5.57~6.81)	9.70	6.15	21.6°C	2017-6-21
D1900V2 Head	39.46 (35.51~43.41)	20.42 (18.38~22.46)	39.98	21.07	21.6°C	2017-6-28
D2450V2 Head	53.08 (47.77~58.39)	23.79 (21.41~26.17)	53.93	24.53	21.6°C	2017-7-10
D835V2 Body	9.86 (8.87~10.85)	6.38 (5.74~7.02)	10.15	6.45	21.6°C	2017-6-21
D1900V2 Body	40.06 (36.05~44.07)	20.76 (18.68~22.84)	39.33	20.94	21.6°C	2017-6-28
D2450V2 Body	54.76 (49.28~60.24)	24.47 (22.02~26.92)	56.33	23.33	21.6°C	2017-7-10
Note: All SAR values are normalized to 1W forward power.						

8 SAR Test Test Configuration

8.1 GSM Test Configurations

SAR tests for GSM850 and GSM1900, a communication link is set up with a base station by air link. Using CMU200 the power lever is set to “5”and “0” in SAR of GSM850 and GSM1900. The tests in the band of GSM 850 and GSM 1900 are performed in the mode of GPRS/EGPRS function. Since the GPRS class is 12 for this EUT, it has at most 4 timeslots in uplink and at most 4 timeslots in downlink, the maximum total timeslot is 5.

8.2 Wi-Fi Test Configuration

For the 802.11b/g SAR tests, a communication link is set up with the test mode software for Wi-Fi mode test. The Absolute Radio Frequency Channel Number(ARFCN) is allocated to 1 ,6 and 11 respectively in the case of 2450 MHz.During the test,at the each test frequency channel, the EUT is operated at the RF continuous emission mode. Each channel should be tested at the lowest data rate. 802.11b/g operating modes are tested independently according to the service requirements in each frquency band. 802.11b/g modes are tested on channel 1, 6, 11; however,if output power reduction is necessary for channels 1 and/or 11 to meet restricted band requirements the highest output channel closest to each of these channels must be tested instead.

SAR is not required for 802.11g/n channels when the maximum average output power is less than

0.25dB higher than that measured on the corresponding 802.11b channels.

Mode	Band	GHz	Channel	“Default Test Channels”	
				802.11b	802.11g
802.11b/g	2.4 GHz	2412	1#	√	∆
		2437	6	√	∆
		2462	11#	√	∆

Notes:

√ = “default test channels”

∆= possible 802.11g channels with maximum average output ¼ dB the “default test channels”

= when output power is reduced for channel 1 and /or 11 to meet restricted band requirements the highest output channels closest to each of these channels should be tested.

802.11 Test Channels per FCC Requirements

9 Detailed Test Results

9.1 Conducted Power measurements

The output power was measured using an integrated RF connector and attached RF cable.

9.1.1 Conducted Power of GSM850

GSM850(SIM1)		Burst-Averaged output Power (dBm)			Division Factors	Source Based time Average Power(dBm)		
		128CH	190CH	251CH		128CH	190CH	251CH
GSM(CS)		33.02	33.01	32.93	-9.03	23.99	23.98	23.90
GPRS (GMSK)	1 Tx Slot	32.32	32.35	32.44	-9.03	23.29	23.32	23.41
	2 Tx Slots	31.41	31.48	31.56	-6.02	25.39	25.46	25.54
	3 Tx Slots	30.51	30.55	30.62	-4.26	26.25	26.29	26.36
	4 Tx Slots	29.82	29.70	29.88	-3.01	**26.81**	**26.69**	**26.87**
EGPRS (8-PSK)	1 Tx Slot	28.05	28.01	28.02	-9.03	19.02	18.98	18.99
	2 Tx Slots	27.08	27.09	27.07	-6.02	21.06	21.07	21.05
	3 Tx Slots	26.12	26.16	26.22	-4.26	21.86	21.90	21.96
	4 Tx Slots	25.55	25.52	25.58	-3.01	22.54	22.51	22.57

GSM850(SIM2)		Burst-Averaged output Power (dBm)			Division Factors	Source Based time Average Power(dBm)		
		128CH	190CH	251CH		128CH	190CH	251CH
GSM(CS)		32.98	33.05	33.09	-9.03	23.95	24.02	24.06
GPRS (GMSK)	1 Tx Slot	32.16	32.41	32.26	-9.03	23.13	23.38	23.23
	2 Tx Slots	31.28	31.58	31.37	-6.02	25.26	25.56	25.35
	3 Tx Slots	30.40	30.46	30.42	-4.26	26.14	26.20	26.16
	4 Tx Slots	29.85	29.77	29.86	-3.01	**26.84**	**26.76**	**26.85**
EGPRS (8-PSK)	1 Tx Slot	28.17	28.30	28.22	-9.03	19.14	19.27	19.19
	2 Tx Slots	27.01	27.05	27.06	-6.02	20.99	21.03	21.04
	3 Tx Slots	26.12	26.10	26.15	-4.26	21.86	21.84	21.89
	4 Tx Slots	25.52	25.51	25.53	-3.01	22.51	22.50	22.52

Note: 1) The conducted power of GSM850 is measured with RMS detector.

2) Source Based time Average Power was calculated from the measured burst-averaged output power by converting the slot powers into linear units and calculating the energy over 8 timeslots.

3)The bolded GPRS 4Tx slots mode was selected for SAR testing according the highest Source Based time Average Power table.

4) channel /Frequency: 128/824.2; 190/836.6; 251/848.8

5) For Dual SIM Operation, when the power of deviation of SIM1 and SIM2 not more than 0.5dB, which tested SIM1 mode first,and then tested SIM2 mode at the worst position from SIM1 mode .

9.1.2 Conducted Power of GSM1900

GSM1900(SIM1)		Burst-Averaged output Power (dBm)			Division Factors	Source Based time Average Power(dBm)		
		512CH	661CH	810CH		512CH	661CH	810CH
GSM(CS)		29.98	29.92	29.95	-9.03	20.95	20.89	20.92
GPRS (GMSK)	1 Tx Slot	29.29	29.16	29.16	-9.03	20.26	20.13	20.13
	2 Tx Slots	28.39	28.26	28.28	-6.02	22.37	22.24	22.26
	3 Tx Slots	27.46	27.37	27.38	-4.26	23.20	23.11	23.12
	4 Tx Slots	26.82	26.79	26.80	-3.01	**23.81**	**23.78**	**23.79**
EGPRS (8-PSK)	1 Tx Slot	27.07	27.05	27.06	-9.03	18.04	18.02	18.03
	2 Tx Slots	26.13	26.10	26.17	-6.02	20.11	20.08	20.15
	3 Tx Slots	25.23	25.19	25.20	-4.26	20.97	20.93	20.94
	4 Tx Slots	24.53	24.42	24.56	-3.01	21.52	21.41	21.55

GSM1900(SIM2)		Burst-Averaged output Power (dBm)			Division Factors	Source Based time Average Power(dBm)		
		512CH	661CH	810CH		512CH	661CH	810CH
GSM(CS)		29.88	29.93	29.90	-9.03	20.85	20.90	20.87
GPRS (GMSK)	1 Tx Slot	29.10	29.17	29.10	-9.03	20.07	20.14	20.07
	2 Tx Slots	28.14	28.12	28.13	-6.02	22.12	22.10	22.11
	3 Tx Slots	27.23	27.34	27.24	-4.26	22.97	23.08	22.98
	4 Tx Slots	26.80	26.76	26.77	-3.01	**23.79**	**23.75**	**23.76**
EGPRS (8-PSK)	1 Tx Slot	27.02	27.04	27.03	-9.03	17.99	18.01	18.00
	2 Tx Slots	26.13	26.10	26.14	-6.02	20.11	20.08	20.12
	3 Tx Slots	25.23	25.20	25.21	-4.26	20.97	20.94	20.95
	4 Tx Slots	24.52	24.40	24.48	-3.01	21.51	21.39	21.47

Note: 1) The conducted power of GSM1900 is measured with RMS detector.

2) Source Based time Average Power was calculated from the measured burst-averaged output power by converting the slot powers into linear units and calculating the energy over 8 timeslots.

3)The bolded GPRS 4Tx slots mode was selected for SAR testing according the highest Source Based time Average Power table.

4) channel /Frequency: 512/1850.2; 661/1880; 810/1909.8

5) For Dual SIM Operation, when the power of deviation of SIM1 and SIM2 not more than 0.5dB, which tested SIM1 mode first,and then tested SIM2 mode at the worst position from SIM1 mode .

9.1.3 Conducted Power of UMTS Band II

UMTS Band II		Conducted Power (dBm)		
		9262CH	9400CH	9538CH
WCDMA	12.2kbps RMC	**21.86**	21.80	21.83
HSDPA	Subtest 1	21.51	21.75	21.76
	Subtest 2	20.95	20.99	20.98
	Subtest 3	21.55	20.88	20.87
	Subtest 4	20.81	20.56	20.89
HSUPA	Subtest 1	21.52	21.67	21.49
	Subtest 2	21.50	21.25	21.68
	Subtest 3	21.44	21.38	21.65
	Subtest 4	20.95	21.62	20.87
	Subtest 5	21.18	21.52	21.43

Note: 1) channel /Frequency: 9262/1852.4, 9400/1880, 9538/1907.6

9.1.4 Conducted Power of UMTS Band V

UMTS Band V		Conducted Power (dBm)		
		4132CH	4182CH	4233CH
WCDMA	12.2kbps RMC	22.33	22.30	**22.42**
HSDPA	Subtest 1	22.09	22.19	22.15
	Subtest 2	21.82	21.80	21.88
	Subtest 3	22.13	21.48	21.99
	Subtest 4	21.84	21.55	21.53
HSUPA	Subtest 1	21.85	21.82	21.55
	Subtest 2	22.21	22.08	21.88
	Subtest 3	22.04	22.17	22.32
	Subtest 4	21.66	21.72	21.87
	Subtest 5	21.91	22.08	22.30

Note: 1) channel /Frequency: 4132/826.4, 4182/836.4, 4233/846.6

9.1.5 Conducted Power of Wi-Fi 2.4G

Mode	802.11b		
Channel / Frequency (MHz)	1(2412)	6(2437)	11(2462)
Average Power(dBm)	15.35	15.48	15.21
Mode	802.11g		
Channel / Frequency (MHz)	1(2412)	6(2437)	11(2462)
Average Power(dBM)	14.33	14.28	14.41
Mode	802.11n(HT20)		
Channel / Frequency (MHz)	1(2412)	6(2437)	11(2462)
Average Power(dBM)	14.23	14.22	14.20
Mode	802.11n(HT40)		
Channel / Frequency (MHz)	1(2412)	6(2437)	11(2462)
Average Power(dBm)	13.31	13.17	13.33

Note:

<KDB 248227 D01, SAR Guidance for Wi-Fi Transmitters>

(1) For handsets operating next to ear, hotspot mode or mini-tablet configurations, the initial test position procedures were applied. The test position with the highest extrapolated peak SAR will be used as the initial test position. When the reported SAR of initial test position is <= 0.4 W/kg, SAR testing for remaining test positions is not required. Otherwise, SAR is evaluated at the subsequent highest peak SAR positions until the reported SAR result is <= 0.8 W/kg or all test positions are measured.

(2) For Wi-Fi 2.4 GHz, the highest measured maximum output power channel for DSSS was selected for SAR measurement. When the reported SAR is <= 0.8 W/kg, no further SAR testing is required. Otherwise, SAR is evaluated at the next highest measured output power channel. When any reported SAR is > 1.2 W/kg, SAR is required for the third channel. For OFDM modes (802.11g/n), SAR is not required when the highest reported SAR for DSSS is adjusted by the ratio of OFDM to DSSS specified maximum output power and it is <= 1.2 W/kg.

9.1.6 Conducted Power of BT

The maximum output power of BT is:

Mode	**1Mbps**		
Channel / Frequency (MHz)	0(2402)	39(2441)	78(2480)
Average Power(dBm)	1.52	1.07	1.30
Mode	**2Mbps**		
Channel / Frequency (MHz)	0(2402)	39(2441)	78(2480)
Average Power(dBm)	0.68	0.26	0.42
Mode	**3Mbps**		
Channel / Frequency (MHz)	0(2402)	39(2441)	78(2480)
Average Power(dBm)	0.67	0.32	0.47

9.1.7 Tune-up power tolerance

Band	Tune-up power tolerance(dBm)		
GSM850	GSM/GPRS (GMSK)	GSM	Max output power =33.0dBm±0.5dBm
		1TXslots	Max output power =32.0dBm±0.5dBm
		2TXslots	Max output power =31.5dBm±0.5dBm
		3TXslots	Max output power =30.0dBm±0.5dBm
		4TXslots	Max output power =29.5dBm±0.5dBm
GSM850	EGPRS (8-PSK)	1TXslots	Max output power =28.0dBm±0.5dBm
		2TXslots	Max output power =27.0dBm±0.5dBm
		3TXslots	Max output power =26.0dBm±0.5dBm
		4TXslots	Max output power =25.5dBm±0.5dBm
GSM1900	GSM/GPRS (GMSK)	GSM	Max output power =29.5dBm±0.5dBm
		1TXslots	Max output power =29.0dBm±0.5dBm
		2TXslots	Max output power =28.0dBm±0.5dBm
		3TXslots	Max output power =27.0dBm±0.5dBm
		4TXslots	Max output power =26.5dBm±0.5dBm
GSM1900	EGPRS (8-PSK)	1TXslots	Max output power =27.0dBm±0.5dBm
		2TXslots	Max output power =26.0dBm±0.5dBm
		3TXslots	Max output power =25.0dBm±0.5dBm
		4TXslots	Max output power =24.5dBm±0.5dBm
WCDMA 2	Max output power =21.0dbm±1.0dbm		
WCDMA 5	Max output power =21.5dbm±1.0dbm		
2.4G Wi-Fi	802.11b		Max output power =15.0±0.5dbm
	802.11g		Max output power =14.0±0.5dbm
	802.11n (HT20)		Max output power =14.0±0.5dbm
	802.11n (HT40)		Max output power =13.0±0.5dbm
BT	Max output power =1.0dBm±1.0dbm		

9.2 SAR test results

Notes:

1) Per KDB447498 D01v05 r02,the SAR test shall be performed at the high, middle and low frequency channels of each operating mode. If the scaled SAR measured at mid-band channel for each test configuration is at least 3.0 dB lower than the SAR limit (< 0.8 W/kg), testing at the high and low channels is optional.

2) Per KDB447498 D01v05r02, testing of other required channels within the operating mode of a frequency band is not required when the reported 1-g or 10-g SAR for the mid-band or highest output power channel is: ≤ 0.8 W/kg or 2.0 W/kg, for 1-g or 10-g respectively, when the transmission band is ≤ 100 MHz. When the maximum output power variation across the required test channels is > ½ dB, instead of the middle channel, the highest output power channel must be used.

3) Per KDB447498 D01v05r02, All measurement SAR result is scaled-up to account for tune-up tolerance is compliant.

4) Per KDB648474 D04v01r02, body-worn accessory testing is typically associated with voice operations. Therefore, GSM voice was evaluated for body-worn with headset SAR.

5)Per KDB248227 D01v01r02, the procedures required to establish specific device operating configurations for testing the SAR of 802.11 a/b/g transmitters.

6) Per KDB865664 D01v01r04,for each frequency band,repeated SAR measurement is required only when the measured SAR is ≥0.8W/Kg; if the deviation among the repeated measurement is ≤20%,and the measured SAR <1.45W/Kg,only one repeated measurement is required.

7) Per KDB865664 D02v01r01, SAR plot is only required for the highest measured SAR in each exposure configuration, wireless mode and frequency band combination; Plots are also required when the measured SAR is > 1.5 W/kg, or > 7.0 W/kg for occupational exposure. The published RF exposure KDB procedures may require additional plots; for example, to support SAR to peak location separation ratio test exclusion and/or volume scan post-processing(Refer to appendix B for details).

8) Per KDB941225 D06v01r01, the DUT Dimension is bigger than 9 cm x 5 cm, so 10mm is chosen as the test separation distance for Hotspot mode. When the antenna-to-edge distance is greater than 2.5cm,such position does not need to be tested.

9) KDB 941225 D01, 3G SAR Measurement Procedures ,The mode tested for SAR is referred to as the primary mode. The equivalent modes considered for SAR test reduction are denoted as secondary

modes. Both primary and secondary modes must be in the same frequency band. When the maximum output power and tune-up tolerance specified for production units in a secondary mode is⩽ 1/4 dB higher than the primary mode or when the highest reported SAR of the primary mode is scaled by the ratio of specified maximum output power and tune-up tolerance of secondary to primary mode and the adjusted SAR is ⩽1.2 W/kg, SAR measurement is not required for the secondary mode.

9.2.1 Results overview of GSM850

Test Position of Head	Test channel /Freq.(MHz)	Test Mode	SAR Value (W/kg)		Power Drift (%)	Conducted Power (dBm)	Tune-up Limit (dBm)	Scaled SAR_{1-g} (W/kg)	Scaling Factor
			1-g	10-g					
Left Head Touched	251/848.8	GPRS 4TS	0.006	0.004	0.000	29.880	30.000	0.006	1.028
Left Head Tilted 15°	251/848.8	GPRS 4TS	0.004	0.003	-2.210	29.880	30.000	0.004	1.028
Right Head Touched	251/848.8	GPRS 4TS	0.007	0.005	1.310	29.880	30.000	**0.007**	1.028
Right Head Tilted 15°	251/848.8	GPRS 4TS	0.004	0.002	1.300	29.880	30.000	0.004	1.028
Test Position of Body with 10mm	**Test channel /Freq.(MHz)**	**Test Mode**	**SAR Value (W/kg)**		**Power Drift (%)**	**Conducted Power (dBm)**	**Tune-up Limit (dBm)**	**Scaled SAR_{1-g} (W/kg)**	**Scaling Factor**
			1-g	**10-g**					
SAR Results for Hotspot Exposure Condition									
Front side	251/848.8	GPRS 4TS	0.047	0.032	-3.280	29.880	30.000	**0.048**	1.028
Rear side	251/848.8	GPRS 4TS	0.045	0.030	1.570	29.880	30.000	0.046	1.028
Bottom side	251/848.8	GPRS 4TS	0.043	0.028	-1.570	29.880	30.000	0.044	1.028
Right side	251/848.8	GPRS 4TS	0.035	0.012	-1.960	29.880	30.000	0.036	1.028
Left side	251/848.8	GPRS 4TS	0.013	0.008	-0.660	29.880	30.000	0.013	1.028

9.2.2 Results overview of GSM1900

Test Position of Head	Test channel /Freq.(MHz)	Test Mode	SAR Value (W/kg)		Power Drift (%)	Conducted Power (dBm)	Tune-up Limit (dBm)	Scaled SAR_{1-g} (W/kg)	Scalig Factor
			1-g	10-g					
Left Head Touched	512/1850.2	GPRS 4TS	0.146	0.082	-1.260	26.820	27.000	0.152	1.042
Left Head Tilted 15°	512/1850.2	GPRS 4TS	0.097	0.054	1.280	26.820	27.000	0.101	1.042
Right Head Touched	512/1850.2	GPRS 4TS	0.153	0.090	-0.690	26.820	27.000	**0.159**	1.042
Right Head Tilted 15°	512/1850.2	GPRS 4TS	0.078	0.043	1.160	26.820	27.000	0.081	1.042
Test Position of Body with 10mm	**Test channel /Freq.(MHz)**	**Test Mode**	**SAR Value (W/kg)**		**Power Drift (%)**	**Conducted Power (dBm)**	**Tune-up Limit (dBm)**	**Scaled SAR_{1-g} (W/kg)**	**Scalig Factor**
			1-g	**10-g**					
SAR Results for Hotspot Exposure Condition									
Front side	512/1850.2	GPRS 4TS	0.766	0.417	-2.080	26.820	27.000	**0.798**	1.042
Rear side	512/1850.2	GPRS 4TS	0.615	0.340	-2.020	26.820	27.000	0.641	1.042
Bottom side	512/1850.2	GPRS 4TS	0.693	0.371	3.060	26.820	27.000	0.722	1.042
Right side	512/1850.2	GPRS 4TS	0.132	0.074	-0.290	26.820	27.000	0.138	1.042
Left side	512/1850.2	GPRS 4TS	0.096	0.046	0.120	26.820	27.000	0.100	1.042

9.2.3 Results overview of UMTS Band II

Test Position of Head	Test channel /Freq.(MHz)	Test Mode	SAR Value (W/kg)		Power Drift (%)	Conducted Power (dBm)	Tune-up Limit (dBm)	Scaled SAR_{1-g} (W/kg)	Scalig Factor
			1-g	10-g					
Left Head Touched	9262/1852.4	RMC	0.166	0.097	0.610	21.860	22.000	**0.171**	1.033
Left Head Tilted 15°	9262/1852.4	RMC	0.107	0.061	1.790	21.860	22.000	0.111	1.033
Right Head Touched	9262/1852.4	RMC	0.084	0.046	-4.870	21.860	22.000	0.087	1.033
Right Head Tilted 15°	9262/1852.4	RMC	0.069	0.039	-3.750	21.860	22.000	0.071	1.033
Test Position of Body with 10mm	**Test channel /Freq.(MHz)**	**Test Mode**	**SAR Value (W/kg)**		**Power Drift (%)**	**Conducted Power (dBm)**	**Tune-up Limit (dBm)**	**Scaled SAR_{1-g} (W/kg)**	**Scalig Factor**
			1-g	**10-g**					
SAR Results for Hotspot Exposure Condition									
Front side	9262/1852.4	RMC	0.551	0.315	1.320	21.860	22.000	**0.569**	1.033
Rear side	9262/1852.4	RMC	0.434	0.254	1.830	21.860	22.000	0.448	1.033
Bottom side	9262/1852.4	RMC	0.527	0.309	3.250	21.860	22.000	0.544	1.033
Right side	9262/1852.4	RMC	0.205	0.115	0.310	21.860	22.000	0.212	1.033
Left side	9262/1852.4	RMC	0.102	0.085	0.210	21.860	22.000	0.105	1.033

9.2.4 Results overview of UMTS Band V

Test Position of Head	Test channel /Freq.(MHz)	Test Mode	SAR Value (W/kg)		Power Drift (%)	Conducted Power (dBm)	Tune-up Limit (dBm)	Scaled SAR_{1-g} (W/kg)	Scalig Factor
			1-g	10-g					
Left Head Touched	4233/846.6	RMC	0.130	0.080	2.750	22.420	22.500	0.132	1.019
Left Head Tilted 15°	4233/846.6	RMC	0.143	0.084	2.750	22.420	22.500	**0.146**	1.019
Right Head Touched	4233/846.6	RMC	0.113	0.070	2.800	22.420	22.500	0.115	1.019
Right Head Tilted 15°	4233/846.6	RMC	0.122	0.076	-1.260	22.420	22.500	0.124	1.019
Test Position of Body with 10mm	**Test channel /Freq.(MHz)**	**Test Mode**	**SAR Value (W/kg)**		**Power Drift (%)**	**Conducted Power (dBm)**	**Tune-up Limit (dBm)**	**Scaled SAR_{1-g} (W/kg)**	**Scalig Factor**
			1-g	**10-g**					
SAR Results for Hotspot Exposure Condition									
Front side	4233/846.6	RMC	0.132	0.070	1.500	22.420	22.500	0.134	1.019
Rear side	4233/846.6	RMC	0.136	0.072	3.410	22.420	22.500	**0.139**	1.019
Bottom side	4233/846.6	RMC	0.130	0.065	0.000	22.420	22.500	0.132	1.019
Right side	4233/846.6	RMC	0.038	0.022	2.980	22.420	22.500	0.039	1.019
Left side	4233/846.6	RMC	0.018	0.010	0.230	22.420	22.500	0.018	1.019

9.2.5 Results overview of Wi-Fi 2.4G

Test Position of Head	Test channel /Freq.(MHz)	Test Mode	SAR Value (W/kg)		Power Drift (%)	Conducted Power (dBm)	Tune-up Limit (dBm)	Scaled SAR_{1-g} (W/kg)	Scaling Factor
			1-g	10-g					
Left Head Touched	6/2437	802.11b	0.072	0.039	-0.310	15.480	15.500	0.072	1.005
Left Head Tilted 15°	6/2437	802.11b	0.033	0.017	0.740	15.480	15.500	0.033	1.005
Right Head Touched	6/2437	802.11b	0.091	0.047	-0.220	15.480	15.500	**0.091**	1.005
Right Head Tilted 15°	6/2437	802.11b	0.050	0.026	-1.750	15.480	15.500	0.050	1.005
Test Position of Body with 10mm	**Test channel /Freq.(MHz)**	**Test Mode**	**SAR Value (W/kg)**		**Power Drift (%)**	**Conducted Power (dBm)**	**Tune-up Limit (dBm)**	**Scaled SAR_{1-g} (W/kg)**	**Scaling Factor**
			1-g	**10-g**					
SAR Results for Hotspot Exposure Condition									
Front side	6/2437	802.11b	0.045	0.022	1.080	15.480	15.500	0.045	1.005
Rear side	6/2437	802.11b	0.085	0.043	-1.780	15.480	15.500	**0.085**	1.005
Top side	6/2437	802.11b	0.048	0.026	-1.110	15.480	15.500	0.048	1.005
Left side	6/2437	802.11b	0.046	0.023	-2.270	15.480	15.500	0.046	1.005

10 Multiple Transmitter Information

The SAR measurement positions of each side are as below:

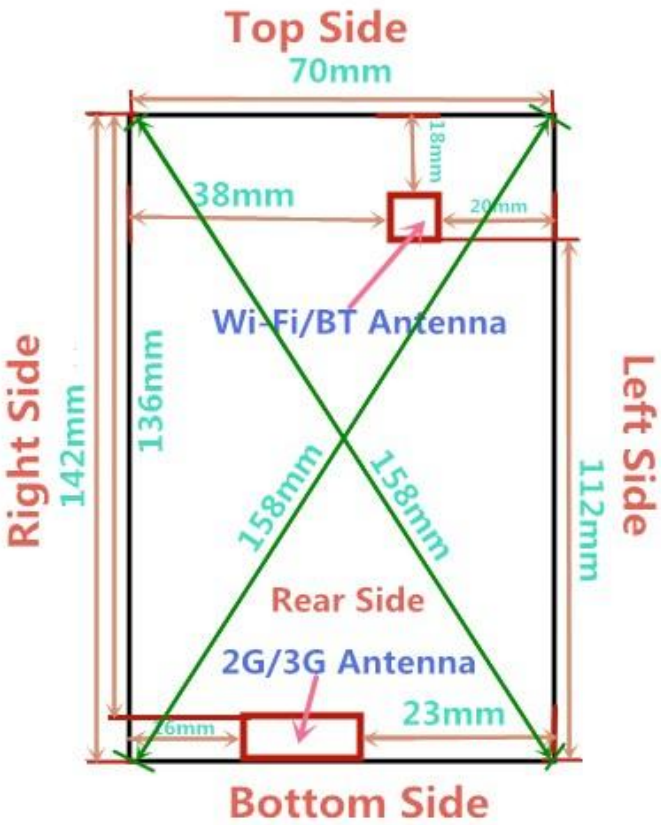

Mode	Front Side	Rear Side	Left Side	Right Side	Top Side	Bottom Side
2G/3G Antenna	Yes	Yes	Yes	Yes	No	Yes
Wi-Fi	Yes	Yes	Yes	No	Yes	No

1) Per KDB941225 D06v01r01, the DUT Dimension is bigger than 9 cm x 5 cm, so 10mm is chosen as the test separation distance for Hotspot mode. When the antenna-to-edge distance is greater than 2.5cm,such position does not need to be tested.

10.1.1 Stand-alone SAR test exclusion

The 1-g and 10-g SAR test exclusion thresholds for 100 MHz to 6 GHz at test separation distances ≤ 50 mm are determined by:

[(max. power of channel, including tune-up tolerance, mW)/(min. test separation distance, mm)] · [√f(GHz)] ≤ 3.0 for 1-g SAR and ≤ 7.5 for 10-g extremity SAR,where

• f(GHz) is the RF channel transmit frequency in GHz

• Power and distance are rounded to the nearest mW and mm before calculation

• The result is rounded to one decimal place for comparison

When the minimum test separation distance is < 5 mm, a distance of 5 mm is applied to determine SAR test exclusion.

Head position

Mode	Pmax(dBm)	Pmax(mW)	Distance(mm)	f(GHz)	Calculation Result	exclusion Threshold	SAR test exclusion
BT	2.00	1.58	5.00	2.45	0.50	3.00	Yes

Body-Worn position

Mode	Pmax(dBm)	Pmax(mW)	Distance(mm)	f(GHz)	Calculation Result	exclusion Threshold	SAR test exclusion
BT	2.00	1.58	10.00	2.45	0.25	3.00	Yes

When the standalone SAR test exclusion applies to an antenna that transmits simultaneously with other antennas, the standalone SAR must be estimated according to the following to determine simultaneous transmission SAR test exclusion

(max. power of channel, including tune-up tolerance, mW)/(min. test separation distance, mm)]·[√f(GHz)/x] W/kg for test separation distances ≤ 50 mm, where x = 7.5 for 1-g SAR.

When the minimum test separation distance is < 5 mm, a distance of 5 mm is applied to determine SAR test exclusion.

Mode	Position	Pmax(dBm)	Pmax(mW)	Distance(mm)	f(GHz)	X	Estimated SAR(W/Kg)
BT	Head	2.00	1.58	5.00	2.45	7.50	0.066
BT	Body	2.00	1.58	10.00	2.45	7.50	0.033

10.1.2 Simultaneous Transmission Possibilities

The Simultaneous Transmission Possibilities are as below:

Simultaneous Transmission Possibilities				
Simultaneous Tx Combination	Configuration	Head	Body	Hotspot
1	GSM/GPRS/UMTS +Wi-Fi	YES	YES	YES
2	GSM/GPRS/UMTS +BT	YES	NO	NO

Note: The device does not support simultaneous BT and Wi-Fi ,because the BT and Wi-Fi share the same antenna and can't transmit simultaneously.

10.1.3 SAR Summation Scenario

Test Position		Scaled SAR_{Max}		$\sum_{1-g}$ SAR	SPLSP
		GSM850	Wi-Fi		
Head	Left Head Touched	0.006	0.072	0.078	NA
	Left Head Tilted 15°	0.004	0.033	0.037	NA
	Right Head Touched	0.007	0.091	0.098	NA
	Right Head Tilted 15°	0.004	0.050	0.054	NA
Body Hotspot	Front side	0.048	0.045	0.093	NA
	Rear side	0.046	0.085	**0.131**	NA
	Bottom side	0.044	0.000	0.044	NA
	Right side	0.036	0.000	0.036	NA
	Left side	0.013	0.046	0.059	NA

Note: Simultaneous Tx Combination of GSM850 and Wi-Fi

Test Position		Scaled SAR_{Max}		$\sum_{1-g}$ SAR	SPLSP
		GSM1900	Wi-Fi		
Head	Left Head Touched	0.152	0.072	0.224	NA
	Left Head Tilted 15°	0.101	0.033	0.134	NA
	Right Head Touched	0.159	0.091	0.250	NA
	Right Head Tilted 15°	0.081	0.050	0.131	NA
Body Hotspot	Front side	0.798	0.045	**0.843**	NA
	Rear side	0.641	0.085	0.726	NA
	Bottom side	0.722	0.000	0.722	NA
	Right side	0.138	0.000	0.138	NA
	Left side	0.100	0.046	0.146	NA

Note: Simultaneous Tx Combination of GSM1900 and Wi-Fi

Test Position		Scaled SAR_{Max}		$\sum_{1-g}$ SAR	SPLSP
		UMTS Band II	Wi-Fi		
Head	Left Head Touched	0.171	0.072	0.243	NA
	Left Head Tilted 15°	0.111	0.033	0.144	NA
	Right Head Touched	0.087	0.091	0.178	NA
	Right Head Tilted 15°	0.071	0.050	0.121	NA
Body Hotspot	Front side	0.569	0.045	**0.614**	NA
	Rear side	0.448	0.085	0.533	NA
	Bottom side	0.544	0.000	0.544	NA
	Right side	0.212	0.000	0.212	NA
	Left side	0.105	0.046	0.151	NA

Note: Simultaneous Tx Combination of UMTS Band II and Wi-Fi

Test Position		Scaled SAR_{Max}		$\sum_{1-g}$ SAR	SPLSP
		UMTS Band V	Wi-Fi		
Head	Left Head Touched	0.132	0.072	0.204	NA
	Left Head Tilted 15°	0.146	0.033	0.179	NA
	Right Head Touched	0.115	0.091	0.206	NA
	Right Head Tilted 15°	0.124	0.050	0.174	NA
Body Hotspot	Front side	0.134	0.045	0.179	NA
	Rear side	0.139	0.085	**0.224**	NA
	Bottom side	0.132	0.000	0.132	NA
	Right side	0.039	0.000	0.039	NA
	Left side	0.018	0.046	0.064	NA

Note: Simultaneous Tx Combination of UMTS Band V and Wi-Fi

MAX.$\sum SAR_{1g}$ = 0.843W/kg<1.6 W/kg, so the Simultaneous SAR is not required for Wi-Fi and GSM&UMTS antenna.

Test Position		Scaled SAR_{Max}		$\sum_{1-g}$ SAR	SPLSP
		GSM850	BT		
Head	Left Head Touched	0.006	0.066	0.072	NA
	Left Head Tilted 15°	0.004	0.066	0.070	NA
	Right Head Touched	0.007	0.066	**0.073**	NA
	Right Head Tilted 15°	0.004	0.066	0.070	NA

Note: Simultaneous Tx Combination of GSM850 and BT

Test Position		Scaled SAR_{Max}		$\sum_{1-g}$ SAR	SPLSP
		GSM1900	BT		
Head	Left Head Touched	0.152	0.066	0.218	NA
	Left Head Tilted 15°	0.101	0.066	0.167	NA
	Right Head Touched	0.159	0.066	**0.225**	NA
	Right Head Tilted 15°	0.081	0.066	0.147	NA

Note: Simultaneous Tx Combination of GSM1900 and BT

Test Position		Scaled SAR_{Max}		$\sum_{1-g}$ SAR	SPLSP
		UMTS Band II	BT		
Head	Left Head Touched	0.171	0.066	**0.237**	NA
	Left Head Tilted 15°	0.111	0.066	0.177	NA
	Right Head Touched	0.087	0.066	0.153	NA
	Right Head Tilted 15°	0.071	0.066	0.137	NA

Note: Simultaneous Tx Combination of UMTS Band II and BT

Test Position		Scaled SAR_{Max}		$\sum_{1-g}$ SAR	SPLSP
		UMTS Band V	BT		
Head	Left Head Touched	0.132	0.066	0.198	NA
	Left Head Tilted 15°	0.146	0.066	**0.212**	NA
	Right Head Touched	0.115	0.066	0.181	NA
	Right Head Tilted 15°	0.124	0.066	0.190	NA

Note: Simultaneous Tx Combination of UMTS Band V and BT

MAX.$\sum SAR_{1g}$ = 0.237W/kg<1.6 W/kg, so the Simultaneous SAR is not required for BT and GSM&UMTS antenna.

11 Measurement uncertainty evaluation

11.1 Measurement uncertainty evaluation for SAR test

The following table includes the uncertainty table of the IEEE 1528. The values are determined by Satimo.The breakdown of the individual uncertainties is as follows:

Measurement Uncertainty evaluation for SAR test								
Uncertainty Component	Tol. (±%)	Prob. Dist.	Div.	C_i (1g)	C_i (10g)	1g U_i (±%)	10g U_i (±%)	V_i
measurement system								
Probe Calibration	5.8	N	1	1	1	5.8	5.8	∞
Axial Isotropy	3.5	R	$\sqrt{3}$	$(1-C_p)^{1/2}$	$(1-C_p)^{1/2}$	1.43	1.43	∞
Hemispherical Isotropy	5.9	R	$\sqrt{3}$	$\sqrt{C_p}$	$\sqrt{C_p}$	2.41	2.41	∞
Boundary Effect	1	R	$\sqrt{3}$	1	1	0.58	0.58	∞
Linearity	4.7	R	$\sqrt{3}$	1	1	2.71	2.71	∞
system Detection Limits	1	R	$\sqrt{3}$	1	1	0.58	0.58	∞
Modulation response	3	N	1	1	1	3.00	3.00	∞
Readout Electronics	0.5	N	1	1	1	0.50	0.50	∞
Response Time	0	R	$\sqrt{3}$	1	1	0.00	0.00	∞
Integration Time	1.4	R	$\sqrt{3}$	1	1	0.81	0.81	∞
RF Ambient Conditions-Noise	3	R	$\sqrt{3}$	1	1	1.73	1.73	∞
RF Ambient Conditions-Reflections	3	R	$\sqrt{3}$	1	1	1.73	1.73	∞
Probe Positioner Mechanical Tolerance	1.4	R	$\sqrt{3}$	1	1	0.81	0.81	∞
Probe positioning with respect to Phantom Shell	1.4	R	$\sqrt{3}$	1	1	0.81	0.81	∞
Extrapolation, interpolation and Integration Algorithms for Max.SAR Evaluation	2.3	R	$\sqrt{3}$	1	1	1.33	1.33	∞
Test sample Related								
Test Sample Positioning	2.6	N	1	1	1	2.60	2.60	11
Device Holder Uncertainty	3	N	1	1	1	3.00	3.00	7
Output Power Variation-SAR drift measurement	5	R	$\sqrt{3}$	1	1	2.89	2.89	∞
SAR scaling	2	R	$\sqrt{3}$	1	1	1.15	1.15	∞
Phantom and Tissue Parameters								
Phantom Uncertainty (shape and thickness tolerances)	4	R	$\sqrt{3}$	1	1	2.31	2.31	∞
Uncertainty in SAR correction for deviation (in permittivity and conductivity)	2	N	1	1	0.84	2.00	1.68	∞
Liquid conductivity（meas.）	2.5	N	1	0.64	0.43	1.60	1.08	5
Liquid conductivity (target.)	5	R	$\sqrt{3}$	0.64	0.43	1.85	1.24	5
Liquid Permittivity（meas.）	2.5	N	1	0.60	0.49	1.50	1.23	∞
Liquid Permittivity (target.)	5	R	$\sqrt{3}$	0.60	0.49	1.73	1.42	∞
Combined Standard Uncertainly		Rss				10.63	10.54	
Expanded Uncertainty{95% CONFIDENCE INTERRVAL}		k				21.26	21.08	

11.2 Measurement uncertainty evaluation for system check

The following table includes the uncertainty table of the IEEE 1528. The values are determined by Satimo.The breakdown of the individual uncertainties is as follows:

Uncertainty For System Performance Check								
Uncertainty Component	Tol. (±%)	Prob. Dist.	Div.	C_i 1g	C_i 10g	1g U_i(±%)	10g U_i (±%)	V_i
measurement system								
Probe Calibration	5.8	N	1	1	1	5.80	5.80	∞
Axial Isotropy	3.5	R	$\sqrt{3}$	$(1-C_p)^{1/2}$	$(1-C_p)^{1/2}$	1.43	1.43	∞
Hemispherical Isotropy	5.9	R	$\sqrt{3}$	$\sqrt{C_p}$	$\sqrt{C_p}$	2.41	2.41	∞
Boundary Effect	1	R	$\sqrt{3}$	1	1	0.58	0.58	∞
Linearity	4.7	R	$\sqrt{3}$	1	1	2.71	2.71	∞
system detection Limits	1	R	$\sqrt{3}$	1	1	0.58	0.58	∞
Modulation response	0	N	1	1	1	0.00	0.00	∞
Readout Electronics	0.5	N	1	1	1	0.50	0.50	∞
Response Time	0	R	$\sqrt{3}$	1	1	0.00	0.00	∞
Integration Time	1.4	R	$\sqrt{3}$	1	1	0.81	0.81	∞
RF ambient Conditions - Noise	3	R	$\sqrt{3}$	1	1	1.73	1.73	∞
RF ambient Conditions – Reflections	3	R	$\sqrt{3}$	1	1	1.73	1.73	∞
Probe positioned Mechanical Tolerance	1.4	R	$\sqrt{3}$	1	1	0.81	0.81	∞
Probe positioning with respect to Phantom Shell	1.4	R	$\sqrt{3}$	1	1	0.81	0.81	∞
Extrapolation, interpolation and integration Algorithms for Max. SAR Evaluation	2.3	R	$\sqrt{3}$	1	1	1.33	1.33	∞
Dipole								
Deviation of experimental source from numerical source	4	N	1	1	1	4.00	4.00	∞
Input power and SAR drift measurement	5	R	$\sqrt{3}$	1	1	2.89	2.89	∞
Dipole axis to liquid Distance	2	R	$\sqrt{3}$	1	1	1.16	1.16	∞
Phantom and Tissue Parameters								
Phantom Uncertainty (shape and thickness tolerances)	4	R	$\sqrt{3}$	1	1	2.31	2.31	∞
Uncertainty in SAR correction for deviation (in permittivity and conductivity)	2	N	1	1	0.84	2.00	1.68	∞
Liquid conductivity（meas.）	2.5	N	1	0.64	0.43	1.60	1.08	5
Liquid conductivity (target.)	5	R	$\sqrt{3}$	0.64	0.43	1.85	1.24	5
Liquid Permittivity（meas.）	2.5	N	1	0.60	0.49	1.50	1.23	∞
Liquid Permittivity (target.)	5	R	$\sqrt{3}$	0.60	0.49	1.73	1.41	∞
Combined Standard Uncertainty		Rss				10.28	9.98	
Expanded Uncertainty (95% Confidence interval)		k				20.57	19.95	

12 Test equipment and ancillaries used for tests

To simplify the identification of the test equipment and/or ancillaries which were used, the reporting of the relevant test cases only refer to the test item number as specified in the table below.

	Manufacturer	Device Type	Type(Model)	Serial number	calibration	
					Last Cal.	Due Date
☒	SATIMO	COMOSAR DOSIMETRIC E FIELD PROBE	SSE5	SN 09/13 EP170	2016-07-25	2017-07-24
☒	SATIMO	COMOSAR 835 MHz REFERENCE DIPOLE	SID835	SN 14/13 DIP0G835-235	2016-07-25	2017-07-24
☐	SATIMO	COMOSAR 900 MHz REFERENCE DIPOLE	SID900	SN 14/13 DIP0G900-231	2016-07-25	2017-07-24
☐	SATIMO	COMOSAR 1800 MHz REFERENCE DIPOLE	SID1800	SN 14/13 DIP1G800-232	2016-07-25	2017-07-24
☒	SATIMO	COMOSAR 1900 MHz REFERENCE DIPOLE	SID1900	SN 14/13 DIP1G900-236	2016-07-25	2017-07-24
☐	SATIMO	COMOSAR 2000 MHz REFERENCE DIPOLE	SID2000	SN 14/13 DIP2G000-237	2016-07-25	2017-07-24
☒	SATIMO	COMOSAR 2450 MHz REFERENCE DIPOLE	SID2450	SN 14/13 DIP2G450-238	2016-07-25	2017-07-24
☐	SATIMO	COMOSAR 2600 MHz REFERENCE DIPOLE	SID2600	SN 28/14 DIP2G600-327	2016-07-25	2017-07-24
☒	SATIMO	Software	OPENSAR	N/A	N/A	N/A
☒	SATIMO	Phantom	COMOSAR IEEE SAM PHANTOM	SN 14/13 SAM99	N/A	N/A
☒	R & S	Universal Radio Communication Tester	CMU 200	117528	2016-08-19	2017-08-18
☒	HP	Network Analyser	8753D	3410A08889	2016-08-19	2017-08-18
☒	HP	Signal Generator	E4421B	GB39340770	2016-08-19	2017-08-18
☒	Keithley	Multimeter	Keithley 2000	4014539	2016-08-19	2017-08-18
☒	SATIMO	Amplifier	Power Amplifier	MODU-023-A-0004	2015-10-13	2016-10-12
☒	Agilent	Power Meter	E4418B	GB43312909	2015-10-13	2016-10-12
☒	Agilent	Power Meter Sensor	E4412A	MY41500046	2015-10-13	2016-10-12
☒	Agilent	Power Meter	E4417A	GB41291826	2015-10-13	2016-10-12
☒	Agilent	Power Meter Sensor	8481H	MY41091215	2015-10-13	2016-10-12
☒	SATIMO	DAE	SUPR72	SN 42/13	2016-07-25	2017-07-24

Annex A: System performance verification

(**Please See the SAR Measurement Plots of annex A.**)

Annex B: Measurement results

(**Please See the SAR Measurement Plots of annex B.**)

Annex C: Calibration reports

(Please See the Calibration reports of annex C.)

Annex D: Photo documentation

Photo 1: Measurement System OPENSAR	Photo 2: Front view
Photo 3: Rear View	Photo 4: Left Head Touched
	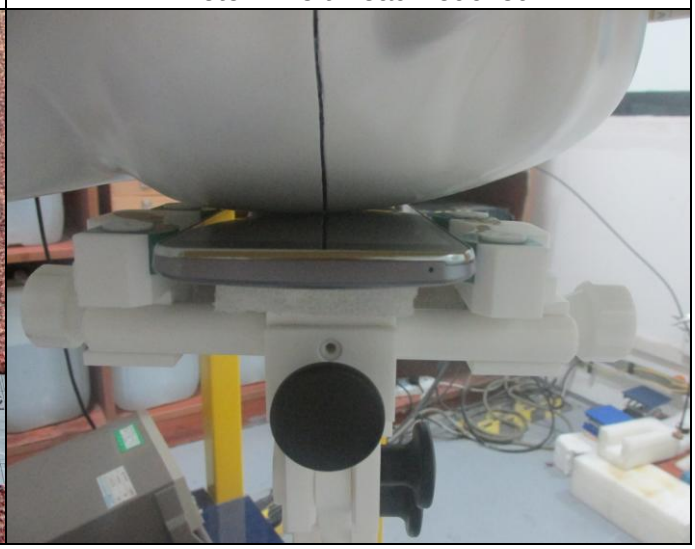

Photo 5: Left Head Tilted 15°	Photo 6: Right Head Touched
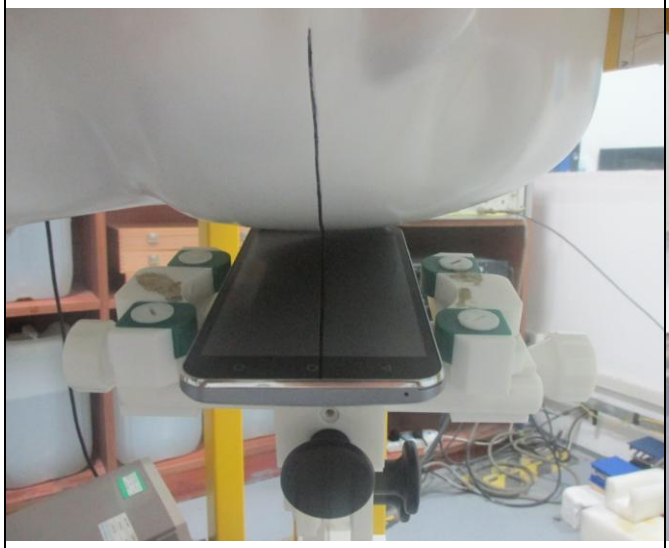	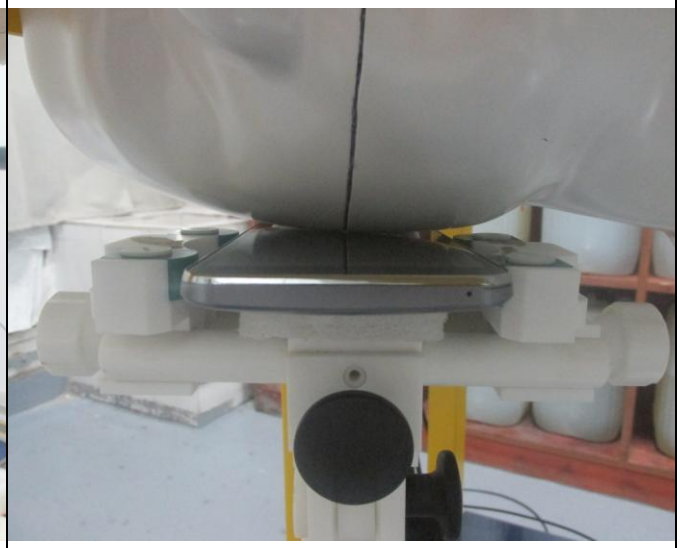
Photo 7: Right Head Tilted 15°	Photo 8: Towards Phantom 10mm
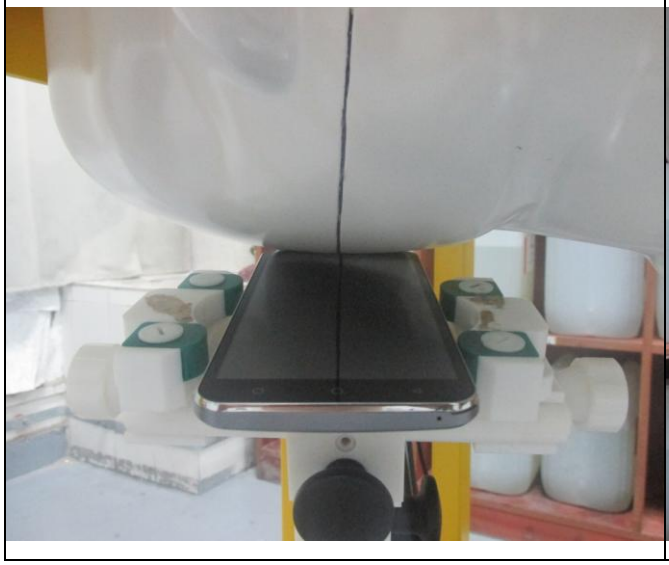	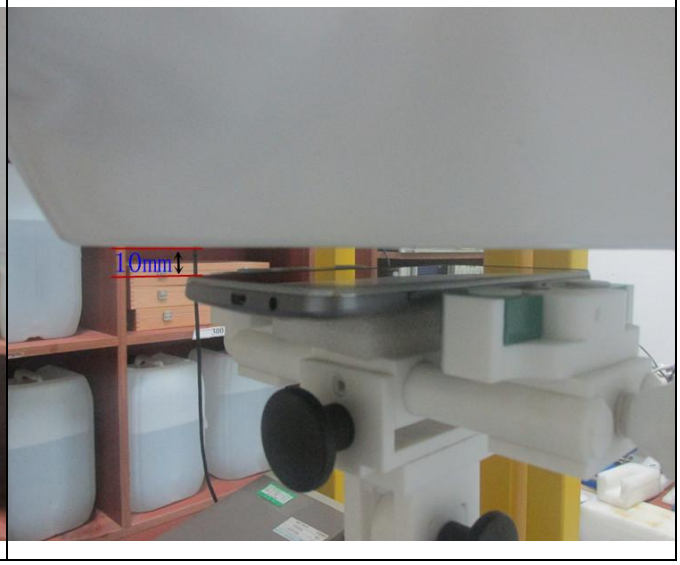

Photo 9: Towards Ground 10mm	Photo 10: Bottom Side 10mm
Photo 11: Top Side 10mm	Photo 12: Right Side 10mm

Photo 13: Left Side 10mm	Photo 14: 850MHz Liquid Depth ≥ 15.0cm
	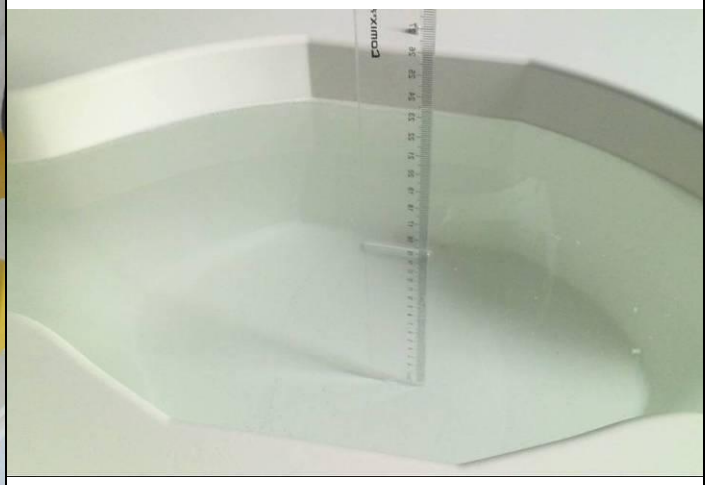

Photo 15: 1800~1900MHz Liquid Depth ≥ 15.0cm	Photo 16: 2450MHz Liquid Depth ≥ 15.0cm

End