FCC Radio Test Report

FCC ID:2AM8GCHAMELEON5RV2

Original Grant

Report No.	:	TBR-C-202202-0108-148
Applicant	:	Guangzhou Lie Dun Electronics Technology CO., Ltd
Equipment Under Test (EUT)		
EUT Name	:	RUGGEDIZED HAND-HELD DEVICE
Model No.	:	CHAMELEON 5R V2 DUAL
Series Model No.	:	CHAMELEON 5R V2 SINGLE
Brand Name	:	CHAMELEON
Sample ID	:	202202_0108-01-3 & 202202_0108-01-4
Receipt Date	:	2022-07-13
Test Date	:	2022-07-13 to 2022-09-29
Issue Date	:	2022-12-28
Standards	:	47 CFR FCC Part 2, Part 90
Test Method	:	ANSI C63.26 2015
Conclusions	:	**PASS**

In the configuration tested, the EUT complied with the standards specified above,

Test/Witness Engineer	:	Camille Li
Engineer Supervisor	:	Ivan Su
Engineer Manager	:	Ray Lai

This report details the results of the testing carried out on one sample. The results contained in this test report do not relate to other samples of the same product. The manufacturer should ensure that all products in series production are in conformity with the product sample detailed in the report.

1/F.,Building 6, Rundongsheng Industrial Zone, Longzhu, Xixiang, Bao'an District, Shenzhen, Guangdong, China
Tel: +86 75526509301 Fax: +86 75526509195

Contents

CONTENTS....2
1. GENERAL INFORMATION ABOUT EUT....5
1.1 Client Information....5
1.2 General Description of EUT (Equipment Under Test)....5
1.3 Block Diagram Showing the Configuration of System Tested....6
1.4 Description of Support Units....7
1.5 Description of Test Mode....7
1.6 Measurement Uncertainty....8
1.7 Test Facility....8
2. TEST SUMMARY....9
3. TEST SOFTWARE....9
4. TEST EQUIPMENT....10
5. CONDUCTED RF OUTPUT POWER....12
5.1 Test Standard and Limit....12
5.2 Test Setup....12
5.3 Test Procedure....12
5.4 Deviation From Test Standard....12
5.5 EUT Operating Condition....12
5.6 Test Data....12
6. PEAK-AVERAGE RATIO....13
6.1 Test Standard and Limit....13
6.2 Test Setup....13
6.3 Test Procedure....13
6.4 Deviation From Test Standard....13
6.5 EUT Operating Condition....13
6.6 Test Data....13
7. OCCUPIED BANDWIDTH....14
7.1 Test Standard and Limit....14
7.2 Test Setup....14
7.3 Test Procedure....14
7.4 Deviation From Test Standard....15
7.5 EUT Operating Condition....15
7.6 Test Data....15
8. OUT OF BAND EMISSION AT ANTENNA TERMINALS....16
8.1 Test Standard and Limit....16
8.2 Test Setup....16
8.3 Test Procedure....17
8.4 Deviation From Test Standard....17
8.5 EUT Operating Condition....17

8.6 Test Data 17
9. EMISSION MASK 18
9.1 Test Standard and Limit 18
9.2 Test Setup 18
9.3 Test Procedure 18
9.4 Deviation From Test Standard 18
9.5 EUT Operating Condition 18
9.6 Test Data 18
10. RADIATED OUTPUT POWER 19
10.1 Test Standard and Limit 19
10.2 Test Setup 19
10.3 Test Procedure 20
10.4 Deviation From Test Standard 20
10.5 EUT Operating Condition 20
10.6 Test Data 20
11. RADIATED OUT BAND OF EMISSIONS 21
11.1 Test Standard and Limit 21
11.2 Test Setup 21
11.3 Test Procedure 21
11.4 Deviation From Test Standard 22
11.5 EUT Operating Condition 22
11.6 Test Data 22
12. FREQUENCY STABILITY 23
12.1 Test Standard and Limit 23
12.2 Test Setup 23
12.3 Test Procedure 24
12.4 Deviation From Test Standard 24
12.5 EUT Operating Condition 24
12.6 Test Data 24
ATTACHMENT A--RADIATED OUTPUT POWER 25
ATTACHMENT B--RADIATED OUT BAND OF EMISSIONS 29

Revision History

Report No.	Version	Description	Issued Date
TBR-C-202202-0108-148	Rev.01	Initial issue of report	2022-12-28

1. General Information about EUT

1.1 Client Information

Applicant	:	Guangzhou Lie Dun Electronics Technology CO., Ltd
Address	:	No.4 plant of No.43 South International Trade Avenue, Hualong Town, Panyu District, Guangzhou, Guangdong, China
Manufacturer	:	Guangzhou Lie Dun Electronics Technology CO., Ltd
Address	:	No.4 plant of No.43 South International Trade Avenue, Hualong Town, Panyu District, Guangzhou, Guangdong, China

1.2 General Description of EUT (Equipment Under Test)

EUT Name	:	RUGGEDIZED HAND-HELD DEVICE	
Models No.	:	CHAMELEON 5R V2 DUAL, CHAMELEON 5R V2 SINGLE	
Model Difference	:	All these models are identical in the same PCB, layout and electrical circuit, the only difference is appearance size, finger print and antenna location.	
Product Description	:	Frequency Bands: LTE Band 26:TX: 814MHz-824MHz, RX: 859MHz-869MHz	
		Antenna Type:	PIFA Antenna
		Antenna Gain:	1.5dBi
		Modulation Type:	QPSK, 16QAM
		Bandwidth:	LTE Band 26: 1.4MHz/3MHz/5MHz/10MHz
		LTE Category:	1
Power Rating	:	For adapter: (Model:MX15W-0502000UX) Input: AC 100V-240V, 50/60Hz 0.3A Output: DC 5V⎓, 2000mA DC 3.85V by 7100mAh Li-ion battery	
Software Version	:	----	
Hardware Version	:	QH6601_MB_V1.1	

Note:

(1) For a more detailed features description, please refer to the manufacturer's specifications or the User's Manual.

(2) Channel List

LTE Band 26(1.4MHz)		LTE Band 26(3MHz)	
Channel	**Frequency (MHz)**	**Channel**	**Frequency (MHz)**
26697	**814.70**	**26705**	**815.50**
26698	814.60	26706	814.60
…...	……	…...	……
26739	818.90	26739	818.90
26740	**819.00**	**26740**	**819.00**
26741	819.10	26741	819.10
……	…..	……	…..
26782	823.20	26774	822.40
26783	**823.30**	**26775**	**822.50**
LTE Band 26(5MHz)		**LTE Band 26(10MHz)**	
Channel	**Frequency (MHz)**	**Channel**	**Frequency (MHz)**
26715	**816.50**	…...	……
26698	816.60	…...	……
…...	……	…...	……
26739	818.90	……	…..
26740	**819.00**	**26740**	**819.00**
26741	819.10	……	…..
……	…..	……	…..
26764	822.40	……	…..
26765	**821.50**	……	…..

1.3 Block Diagram Showing the Configuration of System Tested

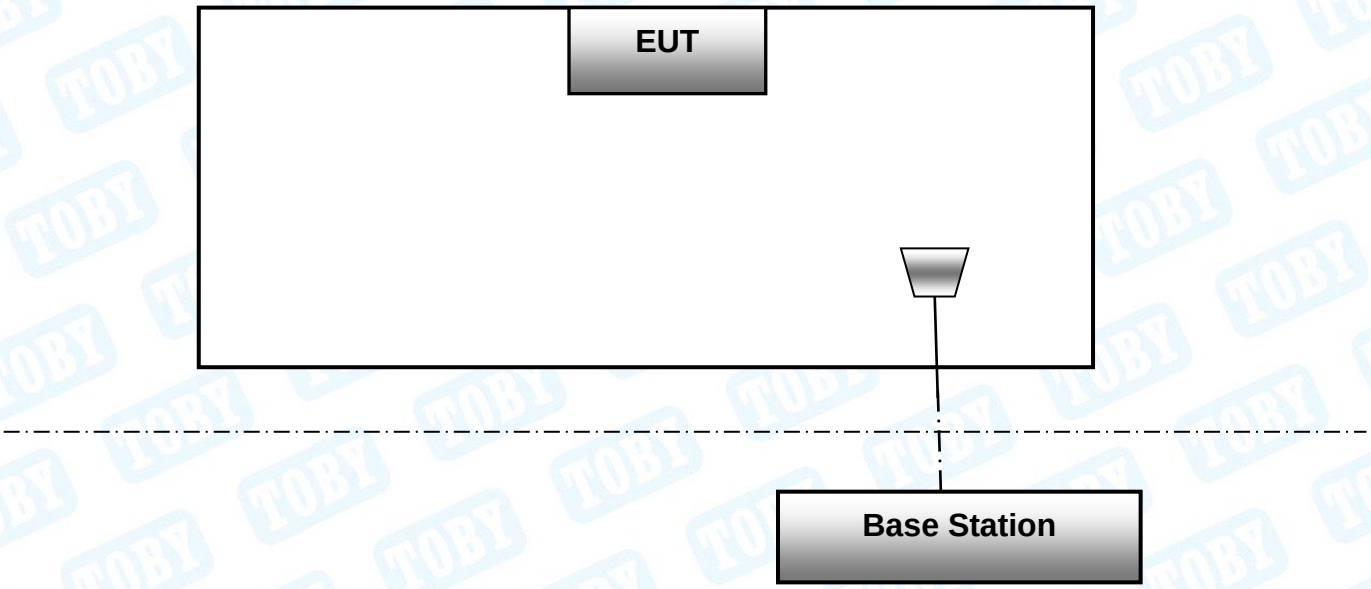

The above block diagram of setup is the normal mode. And more detail please refer to the test setup of each test item of bellow.

1.4 Description of Support Units

The EUT has been tested as an independent unit.

1.5 Description of Test Mode

Antenna port conducted and radiated test items listed below are performed according to KDB 971168 D01 v03r01 and ANSI C63.26 2015 Power Meas. License Digital Systems with maximum output power. Radiated measurements are performed by rotating the EUT in three different or tho-gonal test planes to find the maximum emission.

Remark:
1. The mark “v “ means that this configuration is chosen for testing
2. The mark “--“ means that this bandwidth is not supported.
3. The device is investigated from 30MHz to 10 times of fundamental signal for radiated

ITEMS	Band	Bandwidth (MHz)						Modulation		RB #			Test Channel		
		1.4	3	5	10	15	20	QPSK	16QAM	1	Half	Full	L	M	H
RF Output Power	26	V	V	V	V	--	--	V	V	V	V	V	V	V	V
Peak-to-Average Ratio	26	--	--	--	V	--	--	V	V			V	--	V	--
99% & -26 dB Occupied Bandwidth	26	V	V	V	V	--	--	V	V	V			V	V	V
Spurious Emissions at Antenna Terminal	26	V	V	V	V	--	--	V	V	V		V	V	V	V
Field Strength of Spurious Radiation	26	V	V	V	V	--	--	V	V	V				V	
Emission Masks	26	V	V	V	V	--	--	V	V	V		V	V	V	V
Frequency stability	26	V	V	V	V	--	--	V	V	V				V	
The EUT is LTE Category 1, 16QAM only supports 25%RB. So the 16QAM only test 25%RB.															

Note:

(1) During the testing procedure, the EUT is in link mode with base station emulator at maximum power level in each test mode.

(2) The EUT is considered a portable unit; it was pre-tested on the positioned of each 3 axis, X-plane, Y-plane and Z-plane. The worst case was found positioned on Z-plane as the normal use. Therefore only the test data of this Z-plane was used for radiated emission measurement test.

1.6 Measurement Uncertainty

Test Item	Parameters	Expanded Uncertainty (U_{Lab})
RF Power, conducted	/	±0.82 dB
Radiated Emission	Level Accuracy: 9kHz to 30 MHz	±4.60 dB
Radiated Emission	Level Accuracy: 30MHz to 1000 MHz	±4.50 dB
Radiated Emission	Level Accuracy: Above 1000MHz	±4.20 dB

1.7 Test Facility

The testing was performed by the Shenzhen Toby Technology Co., Ltd., in their facilities located at:1A/F., Bldg.6, Yusheng Industrial Zone, The National Road No.107 Xixiang Section 467, Xixiang, Bao'an, Shenzhen, Guangdong, China.
At the time of testing, the following bodies accredited the Laboratory:

CNAS (L5813)

The Laboratory has been accredited by CNAS to ISO/IEC 17025: 2005 General Requirements for the Competence of Testing and Calibration Laboratories for the competence in the field of testing. And the Registration No.: CNAS L5813.

A2LA Certificate No.: 4750.01

The laboratory has been accredited by American Association for Laboratory Accreditation(A2LA) to ISO/IEC 17025：2005 General Requirements for the Competence of Testing and Calibration Laboratories for the technical competence in the field of Electrical Testing. And the A2LA Certificate No.: 4750.01. FCC Accredited Test Site Number: 854351.

IC Registration No.: (11950A)

The Laboratory has been registered by Certification and Engineering Bureau of Industry Canada for radio equipment testing. The site registration: Site# 11950A.

2. Test Summary

Test Item	Section in CFR 47	Result
RF Output Power	2.1046/90.635(b)	**PASS**
Peak-to-Average Ratio	KDB 971168 D01(5.7)	**PASS**
99% & -26 dB Occupied Bandwidth	2.1049/ 90.209	**PASS**
Spurious Emissions at Antenna Terminal	2.1051 / 90.691	**PASS**
Field Strength of Spurious Radiation	2.1053 /90.691	**PASS**
Emission Masks	2.1051 / 90.691	**PASS**
Frequency stability vs. temperature	2.1055 / 90.213	**PASS**
Frequency stability vs. voltage	2.1055 / 90.213	**PASS**
Pass: The EUT complies with the essential requirements in the standard.		

3. Test Software

Test Item	Test Software	Manufacturer	Version No.
Radiation Emission	EZ-EMC	EZ	FA-03A2RE

4. Test Equipment

Conducted Emission Test					
Equipment	**Manufacturer**	**Model No.**	**Serial No.**	**Last Cal.**	**Cal. Due Date**
EMI Test Receiver	Rohde & Schwarz	ESCI	100321	Jun. 23, 2022	Jun. 22, 2023
RF Switching Unit	Compliance Direction Systems Inc	RSU-A4	34403	Jun. 23, 2022	Jun. 22, 2023
AMN	SCHWARZBECK	NNBL 8226-2	8226-2/164	Jun. 22, 2022	Jun. 21, 2023
LISN	Rohde & Schwarz	ENV216	101131	Jun. 22, 2022	Jun. 21, 2023
Radiation Emission Test					
Equipment	**Manufacturer**	**Model No.**	**Serial No.**	**Last Cal.**	**Cal. Due Date**
Spectrum Analyzer	Agilent	E4407B	MY45106456	Jun. 23, 2022	Jun. 22, 2023
EMI Test Receiver	Rohde & Schwarz	ESPI	100010/007	Jun. 23, 2022	Jun. 22, 2023
Spectrum Analyzer	Rohde & Schwarz	FSV40-N	102197	Jun. 23, 2022	Jun. 22, 2023
Bilog Antenna	ETS-LINDGREN	3142E	00117537	Feb. 27, 2022	Feb.26, 2024
Horn Antenna	ETS-LINDGREN	3117	00143207	Feb. 26, 2022	Feb.25, 2024
Horn Antenna	ETS-LINDGREN	BBHA 9170	1118	Feb. 26, 2022	Feb.25, 2024
Loop Antenna	SCHWARZBECK	FMZB 1519 B	1519B-059	Feb. 26, 2022	Feb.25, 2024
Pre-amplifier	Sonoma	310N	185903	Feb. 26, 2022	Feb.25, 2023
Pre-amplifier	HP	8449B	3008A00849	Feb. 26, 2022	Feb.25, 2023
Pre-amplifier	SKET	LNPA_1840G-50	SK201904032	Feb. 26, 2022	Feb.25, 2023
Cable	HUBER+SUHNER	100	SUCOFLEX	Feb. 26, 2022	Feb.25, 2023
Positioning Controller	ETS-LINDGREN	2090	N/A	N/A	N/A
Antenna Conducted Emission					
Equipment	**Manufacturer**	**Model No.**	**Serial No.**	**Last Cal.**	**Cal. Due Date**
Spectrum Analyzer	Agilent	E4407B	MY45106456	Jun. 23, 2022	Jun. 22, 2023
Spectrum Analyzer	Rohde & Schwarz	FSV40-N	102197	Jun. 23, 2022	Jun. 22, 2023
MXA Signal Analyzer	Agilent	N9020A	MY47380425	Sep. 01, 2022	Aug. 31, 2023
Vector Signal Generator	Agilent	N5182A	MY50141294	Sep. 01, 2022	Aug. 31, 2023
Analog Signal Generator	Agilent	N5181A	MY48180463	Sep. 01, 2022	Aug. 31, 2023
RF Power Sensor	DARE!! Instruments	RadiPowerRPR3006W	17I00015SNO26	Sep. 01, 2022	Aug. 31, 2023
	DARE!! Instruments	RadiPowerRPR3006W	17I00015SNO29	Sep. 01, 2022	Aug. 31, 2023
	DARE!! Instruments	RadiPowerRPR3006W	17I00015SNO31	Sep. 01, 2022	Aug. 31, 2023
	DARE!! Instruments	RadiPowerRPR3006W	17I00015SNO33	Sep. 01, 2022	Aug. 31, 2023
Temperature and	ZhengHang	ZH-QTH-1500	ZH2107264	Jun. 22, 2022	Jun. 21, 2023

Humidity Chamber					

5. Conducted RF Output Power

5.1 Test Standard and Limit

5.1.1 Test Standard

FCC part 2.1046
FCC Part 90.635(b)

5.1.2 Test Limit

RF Output Power
LTE Band 26(814MHz-824MHz**)**
100W(50dBm)

5.2 Test Setup

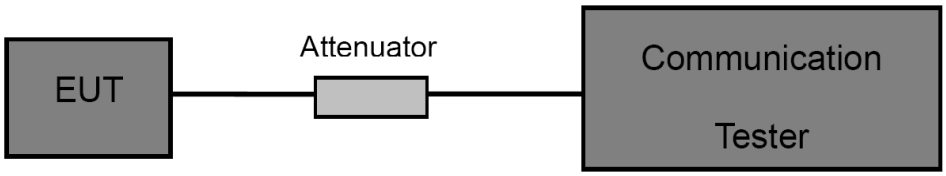

5.3 Test Procedure

(1) The EUT is coupled to the Base Station with the suitable Attenuator, the path loss is calibrated to correct the reading.
(2) A call is set up by the Base Station to the generic call set up procedure.
(3) Set EUT at maximum power level through base station by power level command.
(4) Then read record the power value from the Base Station in dBm.

5.4 Deviation From Test Standard

No deviation

5.5 EUT Operating Condition

The EUT was continuously connected with the Base station and transmitting in the max power during the test.

5.6 Test Data

Please refer to the Appendix LTE Test Data

6. Peak-Average Ratio

6.1 Test Standard and Limit

6.1.1 Test Standard

FCC Part 90

6.1.2 Test Limit

Peak-to-Average Ratio
The peak-to-average ratio (PAR) of the transmission may not exceed 13 dB.

6.2 Test Setup

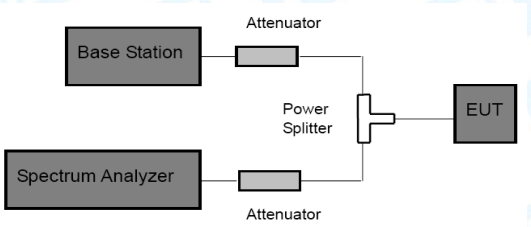

6.3 Test Procedure

According with KDB 971168

(1) The signal analyzer's CCDF measurement profile is enabled.
(2) Frequency = carrier center frequency.
(3) Measurement BW>Emission bandwidth of signal.
(4) The signal analyzer was set to collect one million samples to generate the CCDF curve.
(5) Set the EUT working in highest power level, measured and recorded the 0.1% as PAPR level.
(6) The measurement interval was set depending on the type of signal analyzed. For continuous signals (>98% duty cycle), the measurement interval was set to 1ms. For burst transmissions, the spectrum analyzer is set to use an internal "RF Burst" trigger that is synced with an incoming pulse and the measurement interval is set to less than the duration of the "on time" of one burst to ensure that energy is only captured during a time in which of the transmitter is operating at maximum power.

6.4 Deviation From Test Standard

No deviation

6.5 EUT Operating Condition

The EUT was continuously connected with the Base station and transmitting in the max power during the test.

6.6 Test Data

Please refer to the Appendix LTE Test Data

7. Occupied Bandwidth

7.1 Test Standard and Limit

7.1.1 Test Standard

FCC Part 2.1049

FCC Part 90.209

7.1.2 Test Requirement

According to FCC section 2.1049, the occupied bandwidth is the frequency bandwidth such that below its lower and above its upper frequency limits, the mean powers radiated are each equal to 0.5 percent of the total mean power radiated by a given emission.

Occupied bandwidth is also known as 99% power and -26dBC occupied bandwidths.

7.2 Test Setup

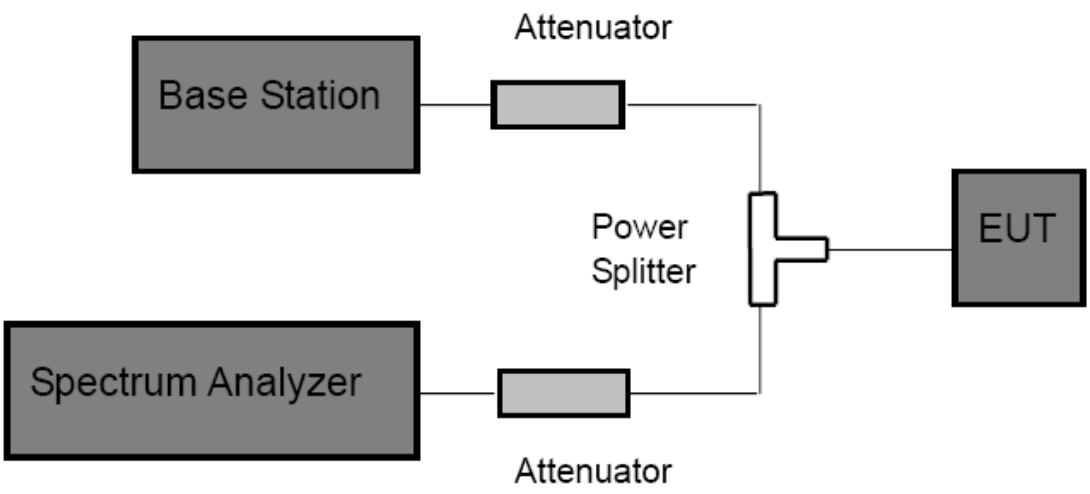

7.3 Test Procedure

(1) The EUT was directly connected to the spectrum analyzer and Base station via power splitter as show in the block diagram above.

(2) The resolution bandwidth of the Spectrum Analyzer is set to at least 1% of the occupied bandwidth. VBW= 3 times RBW.

(3) The low, middle and the high channels are selected to perform tests respectively.

(4) Set the frequency range of the Spectrum Analyzer suitably to capture the waveform; search peak; make a line whose value is 26dB lower than the peak; mark two points which the line intersected the waveform at; finally record the delta of the two points as the occupied bandwidth and the plot.

(5) Set the Spectrum Analyzer Occupied bandwidth function to measure the 99% occupied bandwidth.

7.4 Deviation From Test Standard

No deviation

7.5 EUT Operating Condition

The EUT was continuously connected with the Base station and transmitting in the max power during the test.

7.6 Test Data

Please refer to the Appendix LTE Test Data

8. Out of Band Emission at Antenna Terminals

8.1 Test Standard and Limit

8.1.1 Test Standard

FCC Part 2: 2.1051
FCC Part 90.691

8.1.2 Test Limit

Rule Part 90.691 specifies that “The power of any emission outside of the authorized operating frequency ranges must be attenuated below the transmitting power (P) by a factor of at least 43 + 10 log (P) dB.” this becomes a constant specification limit of -13 dBm.

8.2 Test Setup

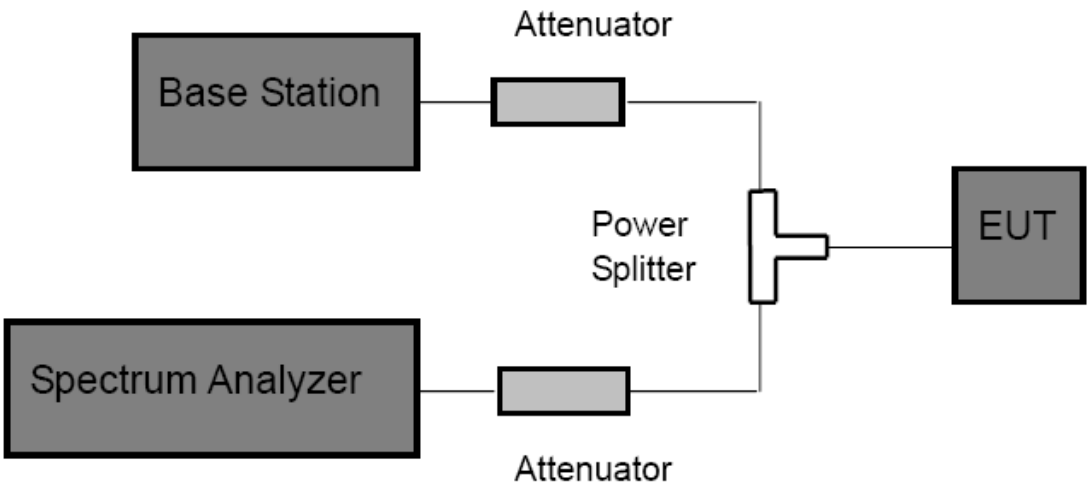

8.3 Test Procedure

1 The RF output of the transceiver was connected to a spectrum analyzer through appropriate attenuation.

2 The resolution bandwidth of the spectrum analyzer was set at 100 kHz when below 1GHz, 1MHz when above 1 GHz; sufficient scans were taken to show the out of band Emissions if any up to 10th harmonic.

3 For the out of band: Set the RBW=100 kHz, VBW=300 kHz when below 1 GHz, RBW =1 MHz, VBW=3 MHz when above 1 GHz, Start=30MHz, Stop= 10th harmonic.

4 Band Edge Requirements: In the 1 MHz bands immediately outside and adjacent to the frequency block, a resolution bandwidth of at least 1 percent of the emission bandwidth of the fundamental emission of the transmitter.

8.4 Deviation From Test Standard

No deviation

8.5 EUT Operating Condition

The EUT was continuously connected with the Base station and transmitting in the max power during the test.

8.6 Test Data

Please refer to the Appendix LTE Test Data

9. Emission Mask

9.1 Test Standard and Limit

9.1.1 Test Standard

FCC Part 2: 2.1051
FCC Part 90.691

9.1.2 Test Limit

Rule Part 90.691(a) specifies that " For any frequency removed from the EA licensee's frequency block by up to and including 37.5 kHz, the power of any emission shall be attenuated below the transmitter power (P) in watts by at least 116 Log10(f/6.1) decibels or 50 + 10 Log10(P) decibels or 80 decibels, whichever is the lesser attenuation, where f is the frequency removed from the center of the outer channel in the block in kilohertz and where f is greater than 12.5 kHz."

9.2 Test Setup

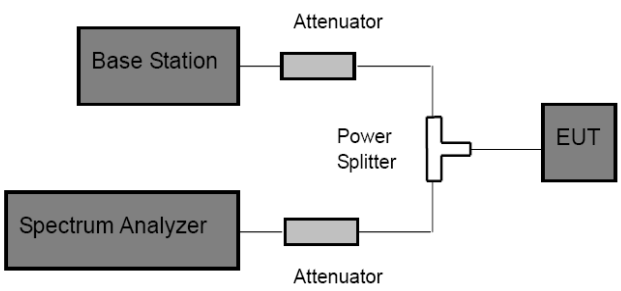

9.3 Test Procedure

(1) The EUT was directly connected to the spectrum analyzer and Base station via power splitter as show in the block diagram above.
(2) Band Edge Requirements: In the 1 MHz bands immediately outside and adjacent to the frequency block, a resolution bandwidth of at least 1 percent of the emission bandwidth of the fundamental emission of the transmitter.

9.4 Deviation From Test Standard

No deviation

9.5 EUT Operating Condition

The EUT was continuously connected with the Base station and transmitting in the max power during the test.

9.6 Test Data

Please refer to the Appendix LTE Test Data

10. Radiated Output Power

10.1 Test Standard and Limit

10.1.1 Test Standard

FCC Part 2.1046
FCC part 90.635(B)

10.1.2 Test Limit

E.R.P
LTE Band 26(814MHz-824MHz**)**
100W(50dBm)

10.2 Test Setup

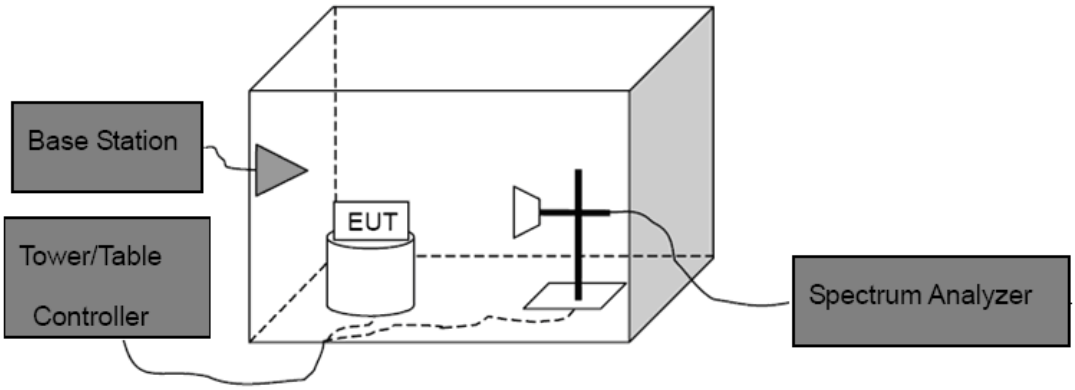

Above 1G

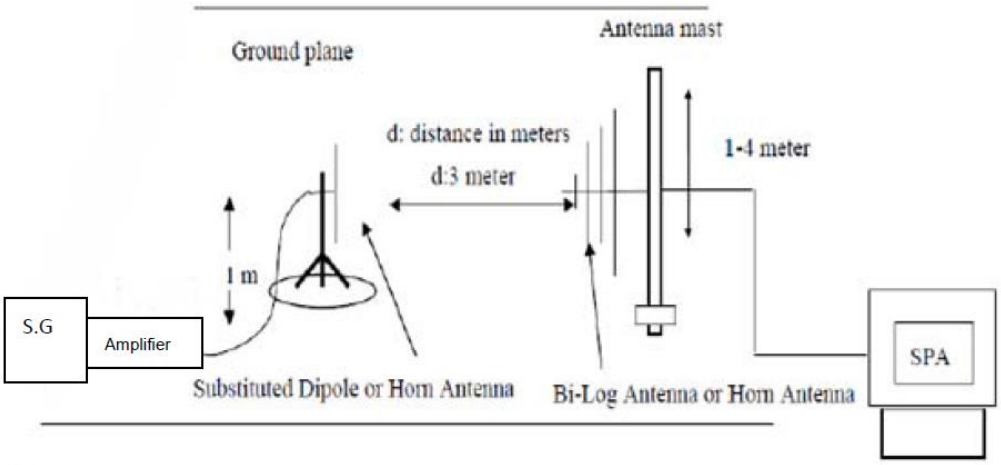

Substituted Method

10.3 Test Procedure

(1) The EUT was placed on an non-conductive rotating platform with 0.8 meter height in an anechoic chamber. The radiated emission at the fundamental frequency was measured at 3 m with a test antenna and a spectrum analyzer with RBW=3 MHz, VBW=3 MHz and peak detector settings.

(2) During the measurement, the EUT was enforced in maximum power and linked with the Base Station. The highest was recorded from analyzer power level (LVT) from the 360 degrees rotation of the turntable and the test antenna raised and lowered over a range from 1 to 4 meters in both horizontally and vertically polarized orientations.

(3) Effective Isotropic Radiated Power (EIRP) was measured by substitution method according to C63.26. The EUT was replaced by dipole antenna (for frequency below 1 GHz) or Horn antenna (for frequency above 1 GHz) at same location with same polarize of receiver antenna and then a known power of each measure frequency from S.G. was applied into the dipole antenna or Horn antenna through a TX cable, and then recorded the maximum Analyzer reading through raised and lowered the test antenna.

Note: In test, the S.G Connect the Pre-amplifier(Sonoma 310N Pre-amplifier for frequency below 1 GHz, HP 8449B Pre-amplifier for frequency above 1 GHz)

Then the EUT's EIRP and ERP was calculated with the correction factor:
ERP=S.G.Level +Antenna Gain Cord.(dBd)-Cable Loss(dB)
EIRP=S.G.Level+Antenna Gain Cord.(dBi)-Cable Loss(dB)

10.4 Deviation From Test Standard

No deviation

10.5 EUT Operating Condition

The EUT was continuously connected with the Base station and transmitting in the max power during the test.

10.6 Test Data

Please refer to the Attachment A.
Measurement Data (worst case)

11. Radiated Out Band of Emissions

11.1 Test Standard and Limit

11.1.1 Test Standard

FCC Part 2.1053

FCC Part 90.691

11.1.2 Test Limit

The power of any emission outside of the authorized operating frequency ranges must be attenuated below the transmitting power(P) by a factor of at least 43+10log(P) dB. For all power levels +30 dBm to 0 dBm, this becomes a constant specification limit of -13 dBm.

11.2 Test Setup

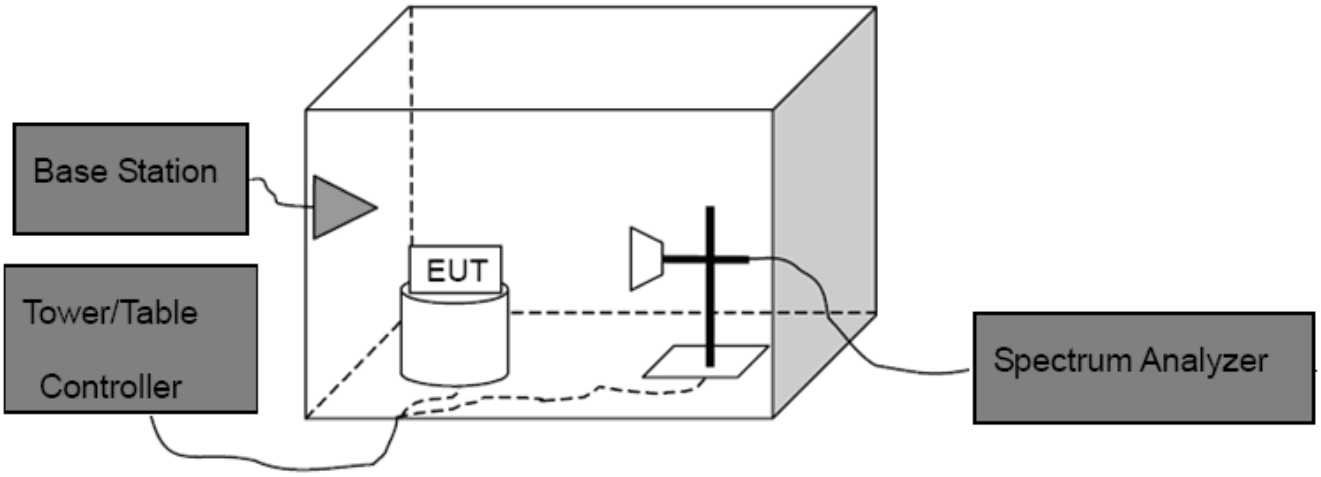

11.3 Test Procedure

(1) The test system setup as show in the block diagram above.

(2) The EUT was placed on an non-conductive rotating platform in an anechoic chamber. The radiated spurious emissions from 30MHz to 10th harmonious of fundamental frequency were measured at 3 m with a test antenna and a spectrum analyzer with RBW=1 MHz, VBW=1 MHz, peak detector settings.

(3) During the measurement, the EUT was enforced in maximum power and linked with a base station. All the spurious emissions at 3m were measured by rotation of the turntable and the test antenna raised and lowered over a range from 1 to 4 meters in both horizontally and vertically polarized orientations.

(4) When found the maximum level of emissions from the EUT. Remove the EUT and replace it with substitution antenna. A signal generator was connected to the substitution antenna by a non-radiating cable. The absolute levels of the spurious emissions were measured by the substitution.

Spurious emissions in dB=10 log(TX power in Watts/0.001)-the absolute level

Spurious attenuation limit in dB=43+10 log(power out in Watts)

11.4 Deviation From Test Standard

No deviation

11.5 EUT Operating Condition

The EUT was continuously connected with the Base station and transmitting in the max power during the test.

11.6 Test Data

Please refer to the Attachment B.
Measurement Data (worst case)

12. Frequency Stability

12.1 Test Standard and Limit

12.1.1 Test Standard

FCC Part 2.1055(a)(1)(b)
FCC Part 90.213

12.1.2 Limit

According to the Sec. 90.213.(a) Unless noted elsewhere, transmitters used in the services governed by this part must have a minimum frequency stability as specified in the following table. Minimum Frequency Stability
[Parts per million (ppm)]

Frequency range (MHz)	Fixed and base stations	Mobile stations	
		Over 2 watts output power	2 watts or less output power
809-824	1.5	2.5	2.5

12.2 Test Setup

For Temperature Test:

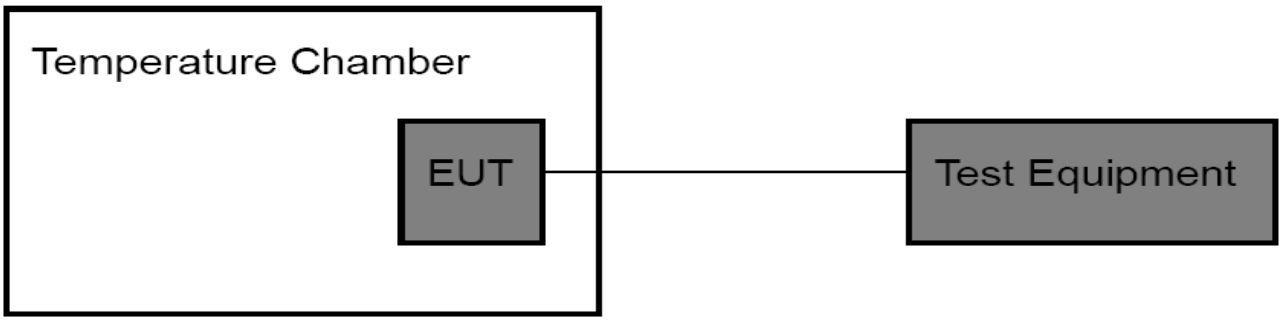

For Voltage Test:

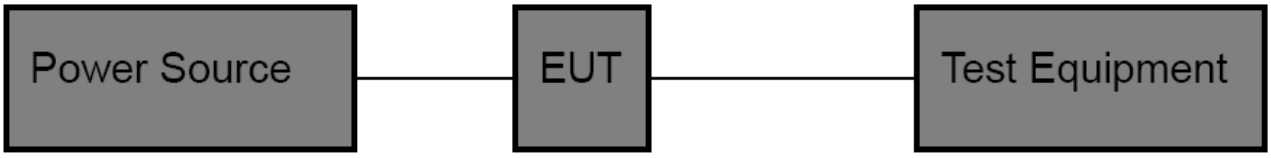

12.3 Test Procedure

Test Procedures for Temperature Variation:

(1) The EUT was set up in the thermal chamber and connected with the base station.

(2) With power off, the temperature was decreased to -30℃ and the EUT was stabilized for three hours. Power was applied and the maximum change in frequency was recorded within one minute.

(3) With power off, the temperature was raised in 10℃ set up to 50℃ and the EUT was stabilized for three hours. Power was applied and the maximum change in frequency was recorded within one minute.

(4) If the EUT cannot be turned on at -30℃, the testing lowest temperature will be raised in 10℃ step until the EUT can be turned on.

Test Procedures for Voltage Variation:

(1) The EUT was placed in a temperature chamber at 25±5℃ and connected with the base station.

(2) Reduce the input voltage to specify extreme voltage variation (+/- 15%) and endpoint, record the maximum frequency change.

(3) The variation in frequency was measured for the worst case.

12.4 Deviation From Test Standard

No deviation

12.5 EUT Operating Condition

The Equipment Under Test was set to Communication with the Base Station.

12.6 Test Data

Please refer to the Appendix LTE Test Data

ATTACHMENT A--RADIATED OUTPUT POWER

Test Results of the SINGLE

Radiated Power (ERP) for LTE Band 26 / 1.4M								
Modulation	RB		Channel	Antenna (H&V)	SG Level (dBm)	Antenna Factor (dBd)	Cable Loss (dB)	EIRP (dBm)
	Size	offset						
QPSK	1	0	Lowest	H	19.99	5.01	2.59	22.41
				V	16.11	5.01	2.59	18.53
	1	0	Middle	H	18.30	4.82	2.59	20.53
				V	17.27	4.82	2.59	19.50
	1	0	Highest	H	17.99	4.45	2.59	19.85
				V	18.41	4.45	2.59	20.27
16QAM	1	0	Lowest	H	18.22	5.01	2.59	20.64
				V	16.62	5.01	2.59	19.04
	1	0	Middle	H	17.76	4.82	2.59	19.99
				V	14.52	4.82	2.59	16.75
	1	0	Highest	H	20.90	4.45	2.59	22.76
				V	14.39	4.45	2.59	16.25
Limit								**50**

Radiated Power (ERP) for LTE Band 26 / 3M								
Modulation	RB		Channel	Antenna (H&V)	SG Level (dBm)	Antenna Factor (dBd)	Cable Loss (dB)	EIRP (dBm)
	Size	offset						
QPSK	1	0	Lowest	H	21.72	5.01	2.59	24.14
				V	18.55	5.01	2.59	20.97
	1	0	Middle	H	16.53	4.82	2.59	18.76
				V	15.21	4.82	2.59	17.44
	1	0	Highest	H	22.73	4.45	2.59	24.59
				V	15.02	4.45	2.59	16.88
16QAM	1	0	Lowest	H	21.73	5.01	2.59	24.15
				V	16.56	5.01	2.59	18.98
	1	0	Middle	H	18.10	4.82	2.59	20.33
				V	16.68	4.82	2.59	18.91
	1	0	Highest	H	22.45	4.45	2.59	24.31
				V	13.95	4.45	2.59	15.81
Limit								**50**

Radiated Power (ERP) for LTE Band 26 / 5M								
Modulation	RB		Channel	Antenna (H&V)	SG Level (dBm)	Antenna Factor (dBd)	Cable Loss (dB)	EIRP (dBm)
	Size	offset						
QPSK	1	0	Lowest	H	18.16	5.01	2.59	20.58
				V	13.55	5.01	2.59	15.97
	1	0	Middle	H	17.32	4.82	2.59	19.55
				V	14.38	4.82	2.59	16.61
	1	0	Highest	H	21.44	4.45	2.59	23.30
				V	14.23	4.45	2.59	16.09
16QAM	1	0	Lowest	H	17.32	5.01	2.59	19.74
				V	17.60	5.01	2.59	20.02
	1	0	Middle	H	22.21	4.82	2.59	24.44
				V	13.78	4.82	2.59	16.01
	1	0	Highest	H	22.74	4.45	2.59	24.60
				V	18.23	4.45	2.59	20.09
Limit								50

Radiated Power (ERP) for LTE Band 26 / 10M								
Modulation	RB		Channel	Antenna (H&V)	SG Level (dBm)	Antenna Factor (dBd)	Cable Loss (dB)	EIRP (dBm)
	Size	offset						
QPSK	1	0	Middle	H	19.57	5.01	2.59	21.99
				V	18.24	5.01	2.59	20.66
16QAM	1	0	Middle	H	20.35	4.82	2.59	22.58
				V	18.66	4.82	2.59	20.89
Limit								50

Test Results of the DUAL

Radiated Power (ERP) for LTE Band 26 / 1.4M								
Modulation	RB		Channel	Antenna (H&V)	SG Level (dBm)	Antenna Factor (dBd)	Cable Loss (dB)	EIRP (dBm)
	Size	offset						
QPSK	1	0	Lowest	H	19.92	5.01	2.59	22.34
				V	15.85	5.01	2.59	18.27
	1	0	Middle	H	20.14	4.82	2.59	22.37
				V	13.92	4.82	2.59	16.15
	1	0	Highest	H	17.64	4.45	2.59	19.50
				V	19.48	4.45	2.59	21.34
16QAM	1	0	Lowest	H	18.38	5.01	2.59	20.80
				V	15.29	5.01	2.59	17.71
	1	0	Middle	H	21.06	4.82	2.59	23.29
				V	17.21	4.82	2.59	19.44
	1	0	Highest	H	20.29	4.45	2.59	22.15
				V	16.42	4.45	2.59	18.28
Limit								**50**

Radiated Power (ERP) for LTE Band 26 / 3M								
Modulation	RB		Channel	Antenna (H&V)	SG Level (dBm)	Antenna Factor (dBd)	Cable Loss (dB)	EIRP (dBm)
	Size	offset						
QPSK	1	0	Lowest	H	20.49	5.01	2.59	22.91
				V	17.65	5.01	2.59	20.07
	1	0	Middle	H	20.17	4.82	2.59	22.40
				V	18.14	4.82	2.59	20.37
	1	0	Highest	H	18.05	4.45	2.59	19.91
				V	15.39	4.45	2.59	17.25
16QAM	1	0	Lowest	H	21.15	5.01	2.59	23.57
				V	16.37	5.01	2.59	18.79
	1	0	Middle	H	19.45	4.82	2.59	21.68
				V	13.80	4.82	2.59	16.03
	1	0	Highest	H	22.84	4.45	2.59	24.70
				V	17.93	4.45	2.59	19.79
Limit								**50**

Radiated Power (ERP) for LTE Band 26 / 5M								
Modulation	RB		Channel	Antenna (H&V)	SG Level (dBm)	Antenna Factor (dBd)	Cable Loss (dB)	EIRP (dBm)
	Size	offset						
QPSK	1	0	Lowest	H	16.67	5.01	2.59	19.09
				V	14.56	5.01	2.59	16.98
	1	0	Middle	H	17.89	4.82	2.59	20.12
				V	15.18	4.82	2.59	17.41
	1	0	Highest	H	21.81	4.45	2.59	23.67
				V	15.61	4.45	2.59	17.47
16QAM	1	0	Lowest	H	22.19	5.01	2.59	24.61
				V	13.79	5.01	2.59	16.21
	1	0	Middle	H	16.67	4.82	2.59	18.90
				V	18.95	4.82	2.59	21.18
	1	0	Highest	H	19.61	4.45	2.59	21.47
				V	17.89	4.45	2.59	19.75
Limit								**50**

Radiated Power (ERP) for LTE Band 26 / 10M								
Modulation	RB		Channel	Antenna (H&V)	SG Level (dBm)	Antenna Factor (dBd)	Cable Loss (dB)	EIRP (dBm)
	Size	offset						
QPSK	1	0	Middle	H	20.16	5.01	2.59	22.58
				V	15.34	5.01	2.59	17.76
16QAM	1	0	Middle	H	21.48	4.82	2.59	23.71
				V	17.71	4.82	2.59	19.94
Limit								**50**

ATTACHMENT B--RADIATED OUT BAND OF EMISSIONS

Measurement Data (worst case)

Test Results of the SINGLE

Test mode:	**LTE BAND 26 1.4MHz(RB size 1 & RB offset 0) for QPSK**						
Channel:	**Middle**						
Frequency (MHz)	Spurious Emission					Limit (dBm)	Result
	Polarization (H&V)	Read Level (dBm)	Antenna Correct Factor (dBi)	Cable Loss (dB)	Emission Level (dBm)		
1638.45	Horizontal	-56.12	14.94	6.12	-35.06	-13.00	Pass
2457.51	H	-66.39	13.87	7.86	-44.66		
3276.84	H	-71.20	14.49	9.54	-47.17		
1638.45	Vertical	-37.93	8.02	3.97	-25.94	-13.00	Pass
2457.51	V	-46.50	10.47	5.05	-30.98		
3276.84	V	-54.82	16.92	5.98	-31.92		

Remark: 1, The testing has been conformed to 10*819.0MHz=819.0MHz.
2, All other emissions more than 50 dB below the limit.
3, Emission Level= Read Level+ Antenna Correct Factor +Cable Loss

Test mode:	**LTE BAND 26 3MHz(RB size 1 & RB offset 0) for QPSK**						
Channel:	**Middle**						
Frequency (MHz)	Spurious Emission					Limit (dBm)	Result
	Polarization (H&V)	Read Level (dBm)	Antenna Correct Factor (dBi)	Cable Loss (dB)	Emission Level (dBm)		
1638.45	Horizontal	-57.87	14.94	6.12	-36.81	-13.00	Pass
2457.51	H	-68.18	13.87	7.86	-46.45		
3276.84	H	-68.17	14.49	9.54	-44.14		
1638.45	Vertical	-35.69	8.02	3.97	-23.70	-13.00	Pass
2457.51	V	-48.43	10.47	5.05	-32.91		
3276.84	V	-57.47	16.92	5.98	-34.57		

Remark: 1, The testing has been conformed to 10*819.0MHz=819.0MHz.
2, All other emissions more than 50 dB below the limit.
3, Emission Level= Read Level+ Antenna Correct Factor +Cable Loss

Test mode:	LTE BAND 26 5MHz(RB size 1 & RB offset 0) for QPSK						
Channel:	Middle						
Frequency (MHz)	Spurious Emission					Limit (dBm)	Result
	Polarization (H&V)	Read Level (dBm)	Antenna Correct Factor (dBi)	Cable Loss (dB)	Emission Level (dBm)		
1638.45	Horizontal	-52.62	14.94	6.12	-31.56	-13.00	Pass
2457.51	H	-64.26	13.87	7.86	-42.53		
3276.84	H	-70.12	14.49	9.54	-46.09		
1638.45	Vertical	-39.43	8.02	3.97	-27.44	-13.00	Pass
2457.51	V	-45.16	10.47	5.05	-29.64		
3276.84	V	-56.79	16.92	5.98	-33.89		

Remark: 1, The testing has been conformed to 10*819.0MHz=819.0MHz.
2, All other emissions more than 50 dB below the limit.
3, Emission Level= Read Level+ Antenna Correct Factor +Cable Loss

Test mode:	LTE BAND 26 10MHz(RB size 1 & RB offset 0) for QPSK						
Channel:	Middle						
Frequency (MHz)	Spurious Emission					Limit (dBm)	Result
	Polarization (H&V)	Read Level (dBm)	Antenna Correct Factor (dBi)	Cable Loss (dB)	Emission Level (dBm)		
1638.45	Horizontal	-57.28	14.94	6.12	-36.22	-13.00	Pass
2457.51	H	-63.75	13.87	7.86	-42.02		
3276.84	H	-68.49	14.49	9.54	-44.46		
1638.45	Vertical	-37.57	8.02	3.97	-25.58	-13.00	Pass
2457.51	V	-46.34	10.47	5.05	-30.82		
3276.84	V	-55.03	16.92	5.98	-32.13		

Remark: 1, The testing has been conformed to 10*819.0MHz=819.0MHz.
2, All other emissions more than 50 dB below the limit.
3, Emission Level= Read Level+ Antenna Correct Factor +Cable Loss

Test Results of the DUAL

Test mode:	**LTE BAND 26 1.4MHz(RB size 1 & RB offset 0) for QPSK**						
Channel:	**Middle**						
Frequency (MHz)	Spurious Emission					Limit (dBm)	Result
	Polarization (H&V)	Read Level (dBm)	Antenna Correct Factor (dBi)	Cable Loss (dB)	Emission Level (dBm)		
1638.45	Horizontal	-55.37	14.94	6.12	-34.31	-13.00	Pass
2457.51	H	-66.61	13.87	7.86	-44.88		
3276.84	H	-68.78	14.49	9.54	-44.75		
1638.45	Vertical	-38.42	8.02	3.97	-26.43	-13.00	Pass
2457.51	V	-45.37	10.47	5.05	-29.85		
3276.84	V	-54.60	16.92	5.98	-31.70		

Remark: 1, The testing has been conformed to 10*819.0MHz=819.0MHz.
2, All other emissions more than 50 dB below the limit.
3, Emission Level= Read Level+ Antenna Correct Factor +Cable Loss

Test mode:	**LTE BAND 26 3MHz(RB size 1 & RB offset 0) for QPSK**						
Channel:	**Middle**						
Frequency (MHz)	Spurious Emission					Limit (dBm)	Result
	Polarization (H&V)	Read Level (dBm)	Antenna Correct Factor (dBi)	Cable Loss (dB)	Emission Level (dBm)		
1638.45	Horizontal	-53.43	14.94	6.12	-32.37	-13.00	Pass
2457.51	H	-63.83	13.87	7.86	-42.10		
3276.84	H	-68.46	14.49	9.54	-44.43		
1638.45	Vertical	-37.55	8.02	3.97	-25.56	-13.00	Pass
2457.51	V	-46.06	10.47	5.05	-30.54		
3276.84	V	-54.20	16.92	5.98	-31.30		

Remark: 1, The testing has been conformed to 10*819.0MHz=819.0MHz.
2, All other emissions more than 50 dB below the limit.
3, Emission Level= Read Level+ Antenna Correct Factor +Cable Loss

Test mode:	LTE BAND 26 5MHz(RB size 1 & RB offset 0) for QPSK						
Channel:	Middle						
Frequency (MHz)	Spurious Emission					Limit (dBm)	Result
	Polarization (H&V)	Read Level (dBm)	Antenna Correct Factor (dBi)	Cable Loss (dB)	Emission Level (dBm)		
1638.45	Horizontal	-58.06	14.94	6.12	-37.00	-13.00	Pass
2457.51	H	-64.61	13.87	7.86	-42.88		
3276.84	H	-68.22	14.49	9.54	-44.19		
1638.45	Vertical	-40.18	8.02	3.97	-28.19	-13.00	Pass
2457.51	V	-45.34	10.47	5.05	-29.82		
3276.84	V	-56.27	16.92	5.98	-33.37		

Remark: 1, The testing has been conformed to 10*819.0MHz=819.0MHz.
2, All other emissions more than 50 dB below the limit.
3, Emission Level= Read Level+ Antenna Correct Factor +Cable Loss

Test mode:	LTE BAND 26 10MHz(RB size 1 & RB offset 0) for QPSK						
Channel:	Middle						
Frequency (MHz)	Spurious Emission					Limit (dBm)	Result
	Polarization (H&V)	Read Level (dBm)	Antenna Correct Factor (dBi)	Cable Loss (dB)	Emission Level (dBm)		
1638.45	Horizontal	-54.72	14.94	6.12	-33.66	-13.00	Pass
2457.51	H	-64.65	13.87	7.86	-42.92		
3276.84	H	-71.65	14.49	9.54	-47.62		
1638.45	Vertical	-40.53	8.02	3.97	-28.54	-13.00	Pass
2457.51	V	-44.19	10.47	5.05	-28.67		
3276.84	V	-59.56	16.92	5.98	-36.66		

Remark: 1, The testing has been conformed to 10*819.0MHz=819.0MHz.
2, All other emissions more than 50 dB below the limit.
3, Emission Level= Read Level+ Antenna Correct Factor +Cable Loss

------End of Report------