TEST REPORT

Product Name : Pocket WiFi+LAN
Model Number : Pocket WiFi+LAN
FCC ID : 2AMEHPOCKETWIFI-LAN

Prepared for : SOLAX POWER NETWORK TECHNOLOGY (ZHEJIANG) CO. ,LTD.
Address : No.288,Shizhu Road, Tonglu Economic Development Zone, Tonglu City, Zhejiang Province, 310000

Prepared by : EMTEK (DONGGUAN) CO., LTD.
Address : -1&2F., Building 2, Zone A, Zhongda Marine Biotechnology Research and Development Base, No. 9, Xincheng Avenue, Songshanhu High-technology Industrial Development Zone, Dongguan, Guangdong, China

Tel : +86-0769-22807078
Fax: +86-0769-22807079

Report Number : EDG2301300046E01401R
Date(s) of Tests : January 30, 2023 to February 20, 2023
Date of Issue : March 15, 2023

TABLE OF CONTENTS

1 TEST RESULT CERTIFICATION 3

2 EUT TECHNICAL DESCRIPTION 4

3 SUMMARY OF TEST RESULT 5

4 TEST METHODOLOGY 6

4.1 GENERAL DESCRIPTION OF APPLIED STANDARDS 6
4.2 MEASUREMENT EQUIPMENT USED 6
4.3 DESCRIPTION OF TEST MODES 7
4.4 TEST SOFTWARE 8

5 FACILITIES AND ACCREDITATIONS 9

5.1 FACILITIES 9
5.2 LABORATORY ACCREDITATIONS AND LISTINGS 9

6 TEST SYSTEM UNCERTAINTY 10

7 SETUP OF EQUIPMENT UNDER TEST 11

7.1 RADIO FREQUENCY TEST SETUP 1 11
7.2 RADIO FREQUENCY TEST SETUP 2 11
7.3 CONDUCTED EMISSION TEST SETUP 12
7.4 BLOCK DIAGRAM CONFIGURATION OF TEST SYSTEM 13
7.5 SUPPORT EQUIPMENT 13

8 TEST REQUIREMENTS 14

8.1 DTS (6DB) BANDWIDTH 14
8.2 MAXIMUM CONDUCTED(AVERAGE) OUTPUT POWER 21
8.3 MAXIMUM POWER SPECTRAL DENSITY 30
8.4 UNWANTED EMISSIONS IN NON-RESTRICTED FREQUENCY BANDS 37
8.5 RADIATED SPURIOUS EMISSION 42
8.6 CONDUCTED EMISSIONS TEST 55
8.7 ANTENNA APPLICATION 58

1 TEST RESULT CERTIFICATION

Applicant	:	SOLAX POWER NETWORK TECHNOLOGY (ZHEJIANG) CO. ,LTD.
Address	:	No.288,Shizhu Road, Tonglu Economic Development Zone, Tonglu City, Zhejiang Province, 310000
Manufacturer	:	SOLAX POWER NETWORK TECHNOLOGY (ZHEJIANG) CO. ,LTD.
Address	:	No.288,Shizhu Road, Tonglu Economic Development Zone, Tonglu City, Zhejiang Province, 310000
EUT	:	Pocket WiFi+LAN
Model Name	:	Pocket WiFi+LAN
Trademark	:	SolaX Power

Measurement Procedure Used:

APPLICABLE STANDARDS	
STANDARD	**TEST RESULT**
FCC 47 CFR Part 2, Subpart J FCC 47 CFR Part 15, Subpart C	PASS

The above equipment was tested by EMTEK (DONGGUAN) CO., LTD. The test data, data evaluation, test procedures, and equipment configurations shown in this report were made in accordance with the procedures given in ANSI C63.10 (2013) and the energy emitted by the sample EUT tested as described in this report is in compliance with the requirements of FCC Rules Part 2 and Part 15.247

The test results of this report relate only to the tested sample identified in this report.

Date of Test : January 30, 2023 to February 20, 2023

Prepared by : Warren Deng
Warren deng /Engineer

Reviewer : Tim Dong
Tim Dong /Supervisor

Approved & Authorized Signer : Sam Lv
Sam Lv /Manager

EMTEK (DONGGUAN) CO.,LTD. TESTING

2 EUT TECHNICAL DESCRIPTION

Characteristics	Description
Product	Pocket WiFi+LAN
Model Number	Pocket WiFi+LAN
Sample Number	1#
IEEE 802.11 WLAN Mode Supported	☒802.11b ☒802.11g ☒802.11n(20MHz channel bandwidth) ☒802.11n(40MHz channel bandwidth)
Data Rate	802.11 b:1,2,5.5,11Mbps; 802.11 g:6,9,12,18,24,36,48,54Mbps; 802.11 n: MCS0~7,up to 150Mbps;
Modulation	DSSS with DBPSK/DQPSK/CCK for 802.11b; OFDM with BPSK/ CCK /16QAM/64QAM for 802.11g/n(HT20)/n(HT40);
Operating Frequency Range	☒2412-2462MHz for 802.11b/g/n(HT20); ☒2422-2452MHz for 802.11n(HT40);
Number of Channels	☒11 channels for 802.11b/g n(HT20); ☒7 Channels for 802.11n(HT40);
Transmit Power Max	14.04 dBm
Smart system	☒SISO for802.11 b/g/n(HT20)/n(HT40); ☐MIMO for802.11n(HT20);
Antenna Type	PCB Antenna
Antenna Gain	3.16 dBi
Test Voltage	DC 5V for USB
Temperature Range	-35℃~+60℃
Date of Received	January 30, 2023

Note: *for more details, please refer to the User's manual of the EUT.*

3 SUMMARY OF TEST RESULT

FCC Part Clause	Test Parameter	Verdict	Remark
15.247(a)(2)	DTS (6dB) Bandwidth	PASS	
15.247(b)(3)	Maximum Peak Conducted Output Power	PASS	
15.247(e)	Maximum Power Spectral Density Level	PASS	
15.247(d)	Unwanted Emission Into Non-Restricted Frequency Bands	PASS	
15.247(d) 15.209	Unwanted Emission Into Restricted Frequency Bands (conducted)	PASS	
15.247(d) 15.209	Radiated Spurious Emission	PASS	
15.207	Conducted Emission Test	PASS	
15.247(b)	Antenna Application	PASS	
	NOTE1:N/A (Not Applicable) NOTE2: According to FCC OET KDB 558074, the report use radiated measurements in the restricted frequency bands. In addition, the radiated test is also performed to ensure the emissions emanating from the device cabinet also comply with the applicable limits.		

RELATED SUBMITTAL(S) / GRANT(S):

This submittal(s) (test report) is intended for 2AMEHPOCKET-LAN filing to comply with Section 15.247 of the FCC Part 15, Subpart C Rules.

4 TEST METHODOLOGY

4.1 GENERAL DESCRIPTION OF APPLIED STANDARDS

According to its specifications, the EUT must comply with the requirements of the following standards:
FCC 47 CFR Part 2, Subpart J
FCC 47 CFR Part 15, Subpart C
FCC KDB 558074 D01 15.247 Meas Guidance v05r02

4.2 MEASUREMENT EQUIPMENT USED

4.2.1 Conducted Emission Test Equipment

Equipment	Manufacturer	Model No.	Serial No.	Last Cal.	Cal. Interval
Test Receiver	Rohde& Schwarz	ESCI	100137	2022/05/19	1Year
L.I.S.N.	Rohde& Schwarz	ENV216	101209	2022/05/19	1Year
RF Switching Unit	CDS	RSU-M2	38401	2022/05/19	1Year

4.2.2 Radiated Emission Test Equipment

Equipment	Manufacturer	Model No.	Serial No.	Last Cal.	Cal. Interval
EMI Test Receiver	Rohde & Schwarz	ESCI	101415	2022/05/19	1Year
Power Amplifier	HP	8447F	OPTH64	2022/05/19	1Year
Bilog Antenna	Schwarzbeck	VULB9163	141	2022/05/22	1Year
Horn antenna	Schwarzbeck	BBHA9120D	1272	2022/05/22	1Year
Power Amplifier	LUNAR EM	LNA1G18-40	J10100000081	2022/05/19	1Year
Loop Antenna	Schwarzbeck	FMZB1513	1513-60	2022/05/22	2 Year
Signal Analyzer	R&S	FSV30	103039	2022/05/19	1Year
Bilog Antenna	Schwarzbeck	VULB9163	141	2022/05/22	1Year
Band reject Filter(50dB)	WI/DE	WRCGV-2400(2400-2485MHz)	2	2022/05/20	1 Year

4.2.3 Radio Frequency Test Equipment

Equipment	Manufacturer	Model No.	Serial No.	Last Cal.	Cal. Interval
Wireless Connectivity Tester	R&S	CMW270	102543	2022/06/21	1Year
Automatic Control Unit	Tonscend	JS0806-2	21I8060480	2022/06/21	1Year
Signal Analyzer	KEYSIGHT	N9010B	MY60242456	2022/06/21	1Year
Analog Signal Generator	KEYSIGHT	N5173B	MY61252625	2022/06/21	1Year
UP/DOWN-Converter	R&S	CMW-Z800A	100274	2022/06/21	1Year
Vector Signal Generator	KEYSIGHT	N5182B	MY61252674	2022/06/21	1Year
Frequency Extender	KEYSIGHT	N5182BX07	MY59362541	2022/06/21	1Year
Temperature&Humidity test chamber	ESPEC	EL-02KA	12107166	2022/06/21	1 Year

4.3 DESCRIPTION OF TEST MODES

The EUT has been tested under its typical operating condition.
The EUT configuration for testing is installed on RF field strength measurement to meet the Commissions requirement and operating in a manner which intends to maximize its emission characteristics in a continuous normal application.

The Transmitter was operated in the normal operating mode. The TX frequency was fixed which was for the purpose of the measurements.

Test of channel included the lowest and middle and highest frequency to perform the test, then record on this report.

Those data rates (☒802.11b:1 Mbps;☒802.11g: 6 Mbps;☒802.11n(HT20): MCS0;☒802.11n(HT40): MCS0) were used for all test.

Pre-defined engineering program for regulatory testing used to control the EUT for staying in continuous transmitting and receiving mode is programmed.

☒Frequency and Channel list for 802.11b/g/n (HT20):

Channel	Frequency (MHz)	Channel	Frequency (MHz)	Channel	Frequency (MHz)
1	2412	6	2437	11	2462
2	2417	7	2442		
3	2422	8	2447		
4	2427	9	2452		
5	2432	10	2457		

☒Frequency and Channel list for 802.11n (HT40):

Channel	Frequency (MHz)	Channel	Frequency (MHz)	Channel	Frequency (MHz)
3	2422	6	2437	9	2452
4	2427	7	2442		
5	2432	8	2447		

☒Test Frequency and Channel for 802.11b/g/n (HT20):

Lowest Frequency		Middle Frequency		Highest Frequency	
Channel	Frequency (MHz)	Channel	Frequency (MHz)	Channel	Frequency (MHz)
1	2412	6	2437	11	2462

☒Test Frequency and Channel for 802.11n (HT40):

Lowest Frequency		Middle Frequency		Highest Frequency	
Channel	Frequency (MHz)	Channel	Frequency (MHz)	Channel	Frequency (MHz)
3	2422	6	2437	9	2452

4.4 TEST SOFTWARE

Item	Software
Radiated Emission:	EMC (Ver. EMEC-3A1)
Conducted Emission	EZ-EMC (Ver. CON-03A1)

5 FACILITIES AND ACCREDITATIONS

5.1 FACILITIES

All measurement facilities used to collect the measurement data are located at
EMTEK (DONGGUAN) CO., LTD.
-1&2F., Building 2, Zone A, Zhongda Marine Biotechnology Research and Development Base, No. 9, Xincheng Avenue, Songshanhu High-technology Industrial Development Zone, Dongguan, Guangdong, China
The sites are constructed in conformance with the requirements of ANSI C63.7, ANSI C63.10 and CISPR Publication 32.

5.2 LABORATORY ACCREDITATIONS AND LISTINGS

Site Description
EMC Lab. : Accredited by CNAS, 2020.08.27
The certificate is valid until 2024.07.05
The Laboratory has been assessed and proved to be in compliance with CNAS/CL01:2018
The Certificate Registration Number is L3150

Accredited by FCC
Designation Number: CN1300
Test Firm Registration Number: 945551

Accredited by A2LA, April 05, 2021
The Certificate Registration Number is 4321.02

Accredited by Industry Canada
The Certificate Registration Number is CN0113

Name of Firm : EMTEK (Dongguan) Co., Ltd.
Site Location : -1&2/F.,Buiding 2,Zone A,Zhongda Marine Biotechnology Research and Development Base,N.9,Xincheng Avenue,Songshanhu High-technology Industrial Development Zone, Dongguan, Guangdong, China

6 TEST SYSTEM UNCERTAINTY

The following measurement uncertainty levels have been estimated for tests performed on the apparatus:

Parameter	Uncertainty
Radio Frequency	± 1x10^-5
Maximum Peak Output Power Test	± 1.0 dB
Conducted Emissions Test	± 2.0 dB
Radiated Emission Test	± 2.0 dB
Power Density	± 2.0 dB
Occupied Bandwidth Test	± 1.0 dB
Band Edge Test	± 3 dB
All emission, radiated	± 3 dB
Antenna Port Emission	± 3 dB
Temperature	± 0.5 ℃
Humidity	± 3 %

Measurement Uncertainty for a level of Confidence of 95%

7 SETUP OF EQUIPMENT UNDER TEST

7.1 RADIO FREQUENCY TEST SETUP 1

The WLAN component's antenna ports(s) of the EUT are connected to the measurement instrument per an appropriate attenuator. The EUT is controlled by PC/software to emit the specified signals for the purpose of measurements.

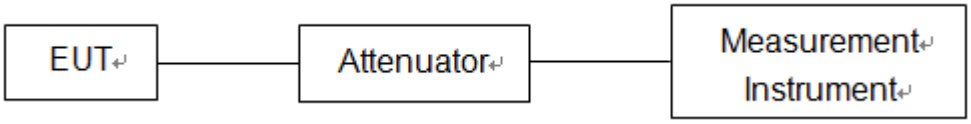

7.2 RADIO FREQUENCY TEST SETUP 2

The test site semi-anechoic chamber has met the requirement of NSA tolerance 4 dB according to the standards: ANSI C63.10. The test distance is 3m.The setup is according to the requirements in Section 13.1.4.1 of ANSI C63.10-2013 and CAN/CSA-CEI/IEC CISPR 22.

Below 30MHz：

The EUT is placed on a turntable 0.8 meters above the ground in the chamber, 3 meter away from the antenna (loop antenna). The Antenna should be positioned with its plane vertical at the specified distance from the EUT androtated about its vertical axis formaximum response at each azimuth about the EUT. The center of the loopshall be 1 m above the ground.For certain applications, the loop antennaplane may also need to be positioned horizontally at the specified distance from the EUT.

30MHz-1GHz：

The EUT is placed on a turntable 0.8 meters above the ground in the chamber, 3 meter away from the antenna. The maximal emission value is acquired by adjusting the antenna height, polarisation and turntable azimuth. Normally, the height range of antenna is 1 m to 4 m, the azimuth range of turntable is 0° to 360°, and the receive antenna has two polarizations Vertical (V) and Horizontal (H).

Above 1GHz：

The EUT is placed on a turntable 1.5 meters above the ground in the chamber, 3 meter away from the antenna. The maximal emission value is acquired by adjusting the antenna height, polarisation and turntable azimuth. Normally, the height range of antenna is 1 m to 4 m, the azimuth range of turntable is 0° to 360°, and the receive antenna has two polarizations Vertical (V) and Horizontal (H).

(a) Radiated Emission Test Set-Up, Frequency Below 30MHz

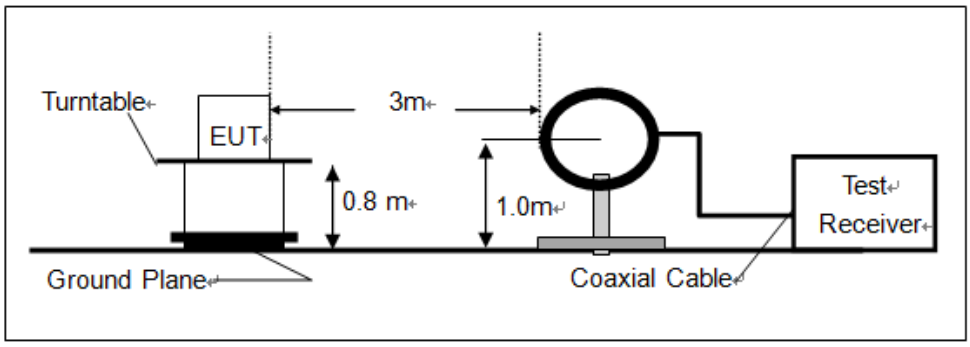

(b)Radiated Emission Test Set-Up, Frequency Below 1000MHz

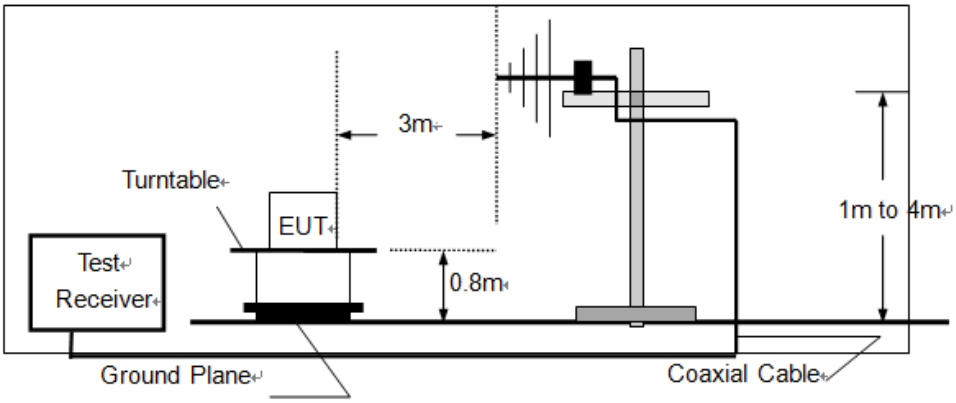

(c) Radiated Emission Test Set-Up, Frequency above 1000MHz

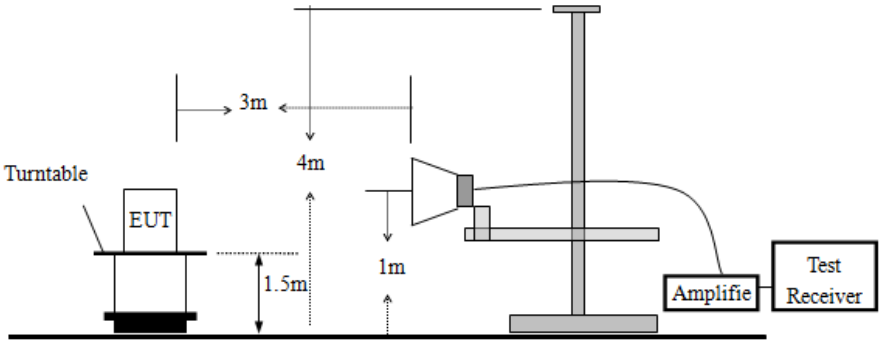

7.3 CONDUCTED EMISSION TEST SETUP

The mains cable of the EUT (maybe per AC/DC Adapter) must be connected to LISN. The LISN shall be placed 0.8 m from the boundary of EUT and bonded to a ground reference plane for LISN mounted on top of the ground reference plane. This distance is between the closest points of the LISN and the EUT. All other units of the EUT and associated equipment shall be at least 0.8m from the LISN.
Ground connections, where required for safety purposes, shall be connected to the reference ground point of the LISN and, where not otherwise provided or specified by the manufacturer, shall be of same length as the mains cable and run parallel to the mains connection at a separation distance of not more than 0.1 m.
According to the requirements in Section 13.1.4.1 of ANSI C63.10-2013 Conducted emissions from the EUT measured in the frequency range between 0.15 MHz and 30 MHz using CISPR Quasi-Peak and average detector mode.

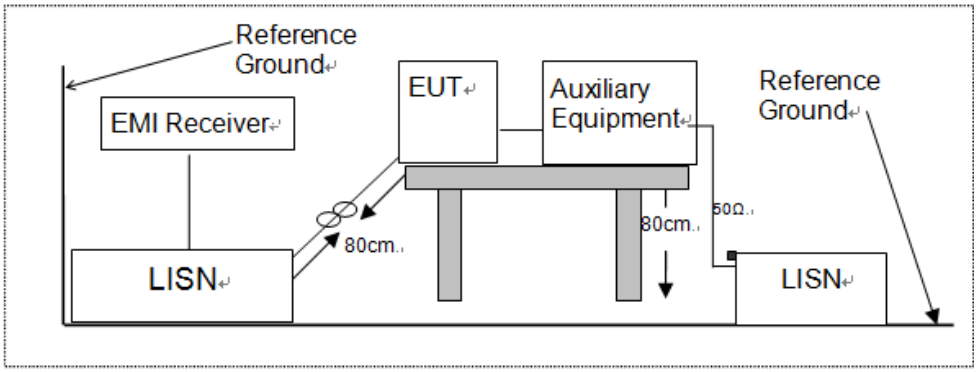

7.4 BLOCK DIAGRAM CONFIGURATION OF TEST SYSTEM

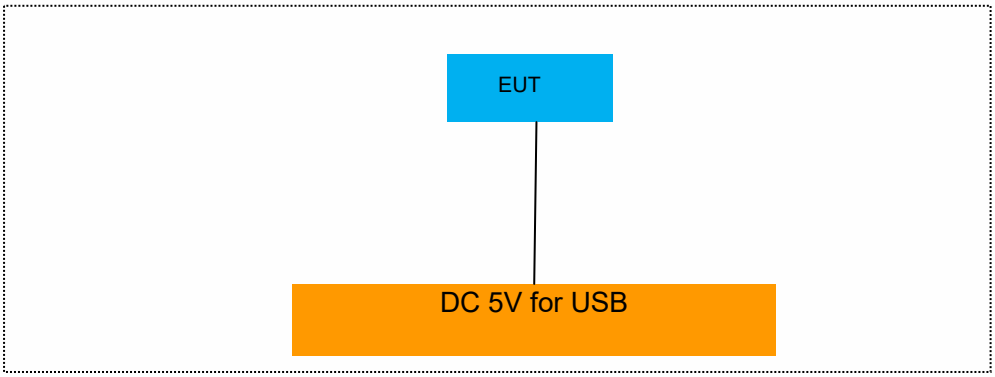

7.5 SUPPORT EQUIPMENT

EUT Cable List and Details			
Cable Description	Length (m)	Shielded/Unshielded	With / Without Ferrite
/	/	/	/

Auxiliary Cable List and Details			
Cable Description	Length (m)	Shielded/Unshielded	With / Without Ferrite
/	/	/	/

Auxiliary Equipment List and Details			
Description	Manufacturer	Model	Serial Number
/	/	/	/

Notes:

1. *All the equipment/cables were placed in the worst-case configuration to maximize the emission during the test.*
2. *Grounding was established in accordance with the manufacturer's requirements and conditions for the intended use.*
3. *Unless otherwise denoted as EUT in 『Remark』 column , device(s) used in tested system is a support equipment*

8 TEST REQUIREMENTS

8.1 DTS (6DB) BANDWIDTH

8.1.1 Applicable Standard

According to FCC Part15.247 (a)(2) and KDB 558074 D01 15.247 Meas Guidance v05r02

8.1.2 Conformance Limit

The minimum -6 dB bandwidth shall be at least 500 kHz.

8.1.3 Test Configuration

Test according to clause 7.1 radio frequency test setup 1

8.1.4 Test Procedure

The EUT was operating in IEEE 802.11b/g/n mode and controlled its channel. Printed out the test result from the spectrum by hard copy function.
The RF output of EUT was connected to the spectrum analyzer by RF cable and attenuator. The path loss was compensated to the results for each measurement.
Set to the maximum power setting and enable the EUT transmit continuously
Set RBW = 100 kHz.
Set the video bandwidth (VBW) =300kHz.
Set Span=2 times OBW
Set Detector = Peak.
Set Trace mode = max hold.
Set Sweep = auto couple.
Allow the trace to stabilize.
Measure the maximum width of the emission that is constrained by the frequencies associated with the two outermost amplitude points (upper and lower frequencies) that are attenuated by 6 dB relative to the maximum level measured in the fundamental emission.
Measure and record the results in the test report.

8.1.5 Test Results

Temperature:	23° C
Relative Humidity:	56%
ATM Pressure:	1011 mbar

Operation Mode	Channel Number	Channel Frequency (MHz)	Measurement Bandwidth (MHz)	Limit (kHz)	Verdict
802.11b	1	2412	9.067	>500	PASS
	6	2437	9.542	>500	PASS
	11	2462	9.049	>500	PASS
802.11g	1	2412	16.340	>500	PASS
	6	2437	16.330	>500	PASS
	11	2462	16.360	>500	PASS
802.11n (HT20)	1	2412	17.560	>500	PASS
	6	2437	17.580	>500	PASS
	11	2462	17.560	>500	PASS
802.11n (HT40)	3	2422	33.650	>500	PASS
	5	2437	33.580	>500	PASS
	7	2452	33.450	>500	PASS

Test Model	DTS (6dB) Bandwidth 802.11b Channel 1: 2412MHz

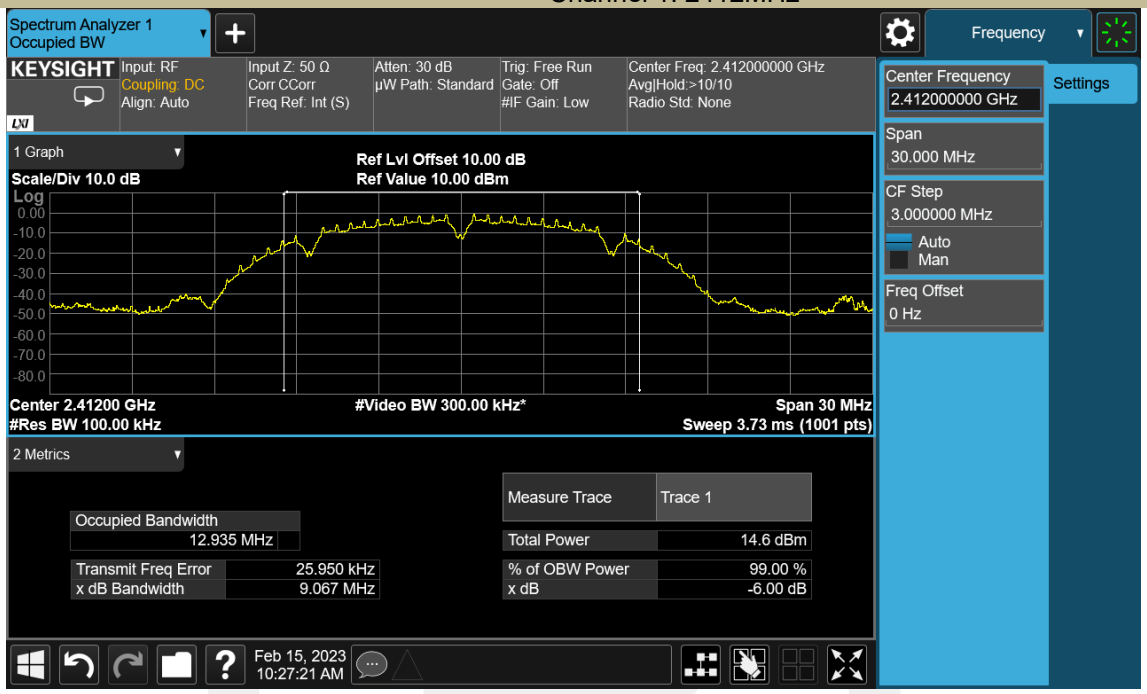

Test Model	DTS (6dB) Bandwidth 802.11b Channel 6: 2437MHz

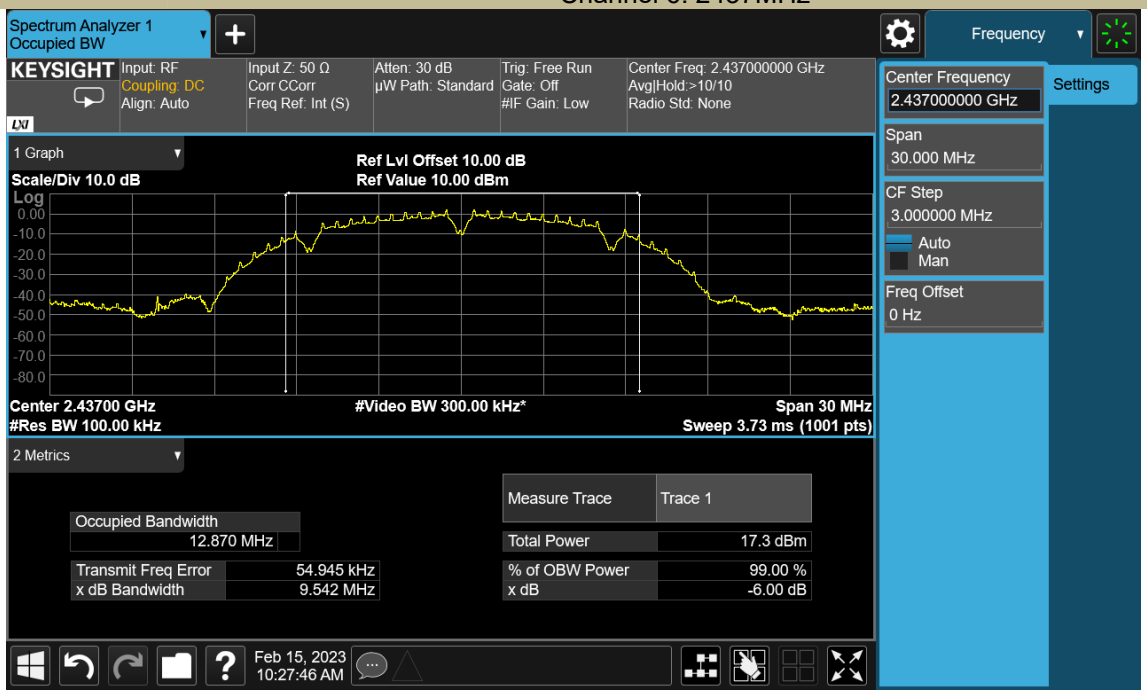

Test Model	DTS (6dB) Bandwidth 802.11b Channel 11: 2462MHz

Test Model	DTS (6dB) Bandwidth 802.11g Channel 1: 2412MHz

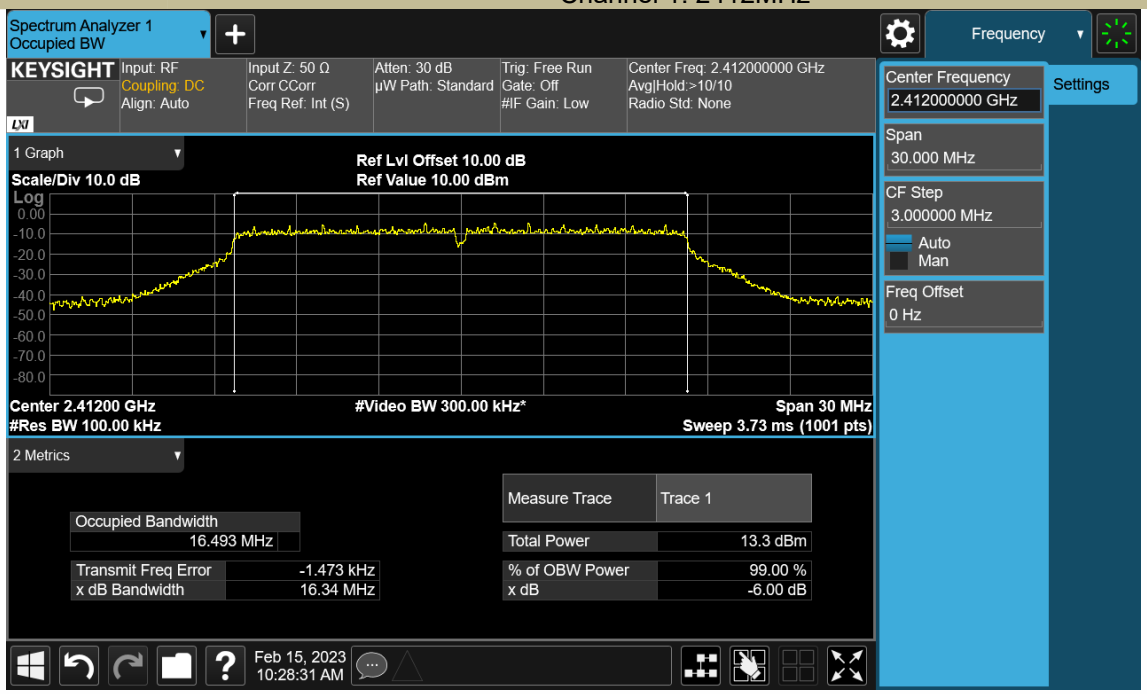

Test Model	DTS (6dB) Bandwidth 802.11g Channel 6: 2437MHz

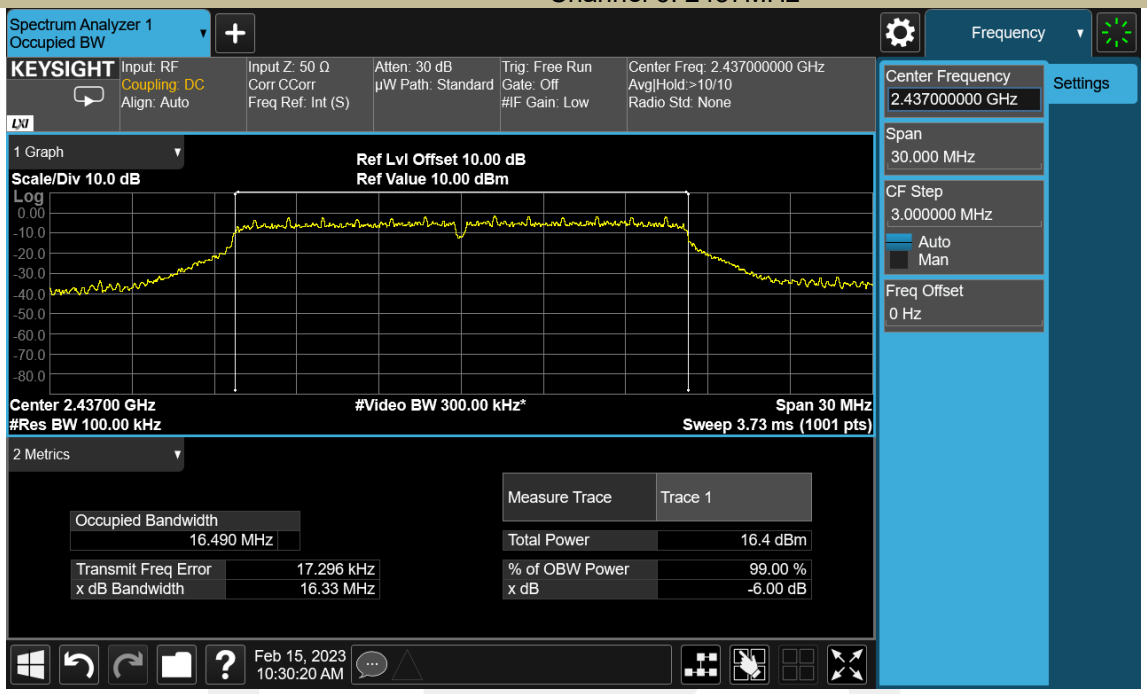

Test Model	DTS (6dB) Bandwidth 802.11g Channel 11: 2462MHz

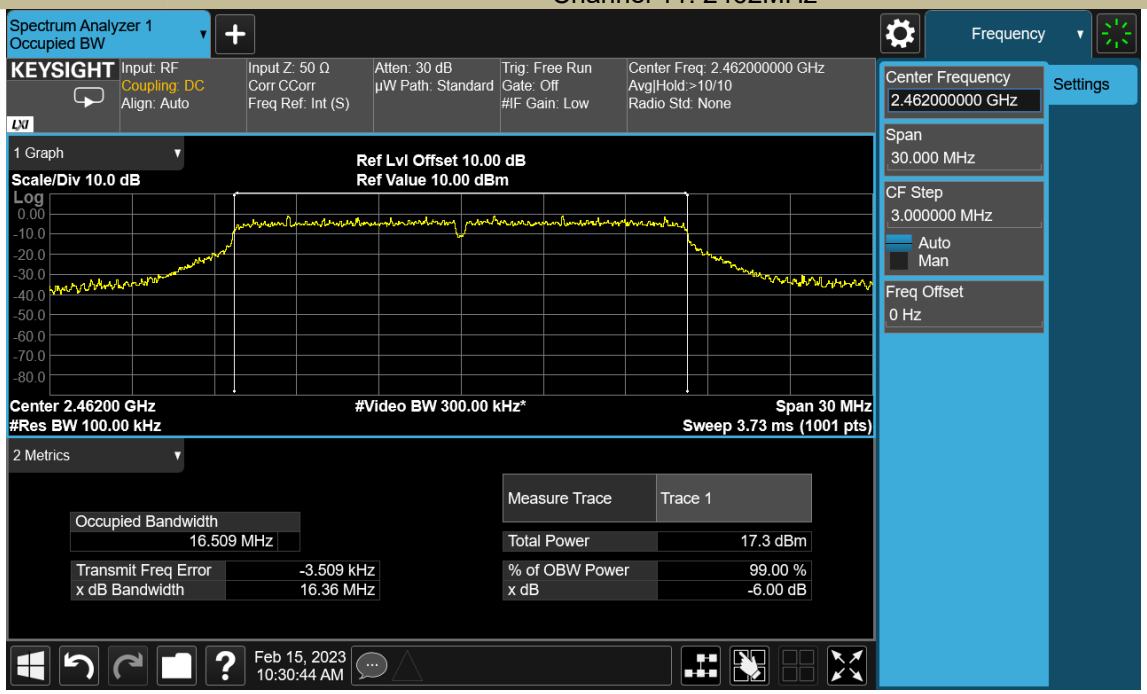

Test Model	DTS (6dB) Bandwidth 802.11n (HT20) Channel 1: 2412MHz

Test Model	DTS (6dB) Bandwidth 802.11n (HT20) Channel 6: 2437MHz

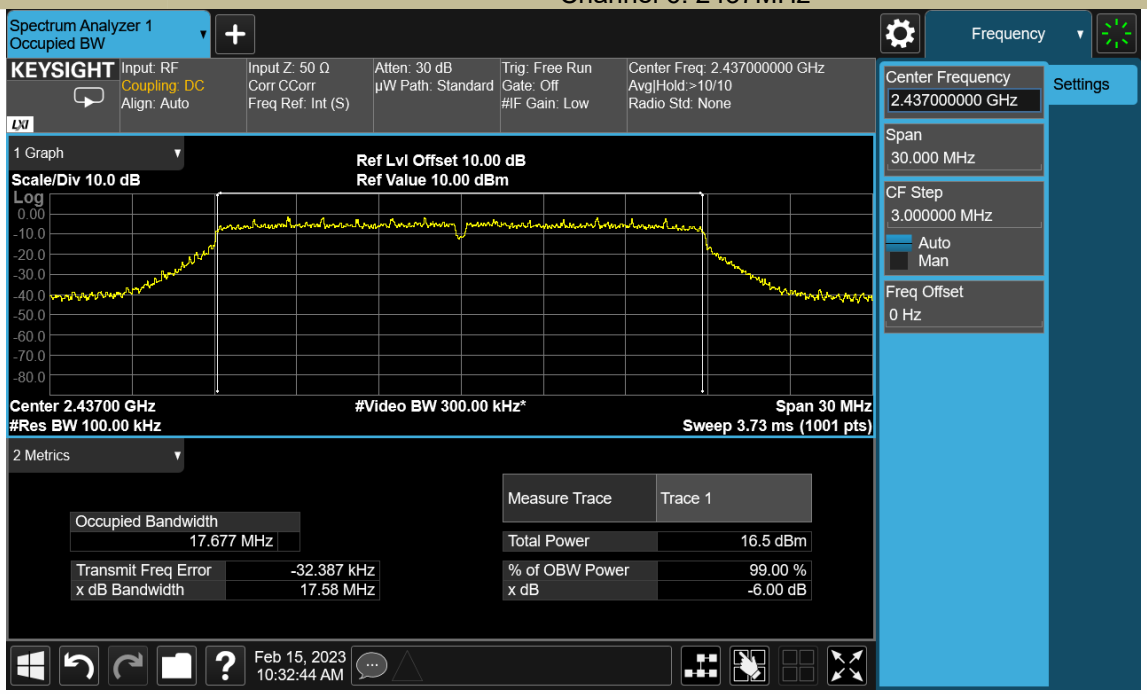

Test Model	DTS (6dB) Bandwidth 802.11n (HT20) Channel 11: 2462MHz

Test Model	DTS (6dB) Bandwidth 802.11n (HT40) Channel 3: 2422MHz

Test Model	DTS (6dB) Bandwidth 802.11n (HT40) Channel 6: 2437MHz

Test Model	DTS (6dB) Bandwidth 802.11n (HT40) Channel 9: 2452MHz

8.2 MAXIMUM CONDUCTED (AVERAGE) OUTPUT POWER

8.2.1 Applicable Standard

According to FCC Part15.247 (b)(3) and KDB 558074 D01 15.247 Meas Guidance v05r02

8.2.2 Conformance Limit

The maximum peak conducted output power of the intentional radiator for systems using digital modulation in the 2400 - 2483.5 MHz bands shall not exceed: 1 Watt (30dBm).

8.2.3 Test Configuration

Test according to clause 7.1 radio frequency test setup 1

8.2.4 Test Procedure

a) Set span to at least 1.5 times the OBW.
b) Set RBW = 1-5% of the OBW, not to exceed 1 MHz.
c) Set VBW ⩾ 3 x RBW.
d) Number of points in sweep ⩾ 2 × span / RBW. (This gives bin-to-bin spacing ⩽ RBW/2, so that narrowband signals are not lost between frequency bins.)
e) Sweep time = auto.
f) Detector = RMS (i.e., power averaging), if available. Otherwise, use sample detector mode.
g) If transmit duty cycle < 98 %, use a sweep trigger with the level set to enable triggering only on full power pulses. The transmitter shall operate at maximum power control level for the entire duration of every sweep. If the EUT transmits continuously (i.e., with no off intervals) or at duty cycle ⩾ 98 %, and if each transmission is entirely at the maximum power control level, then the trigger shall be set to "free run".
h) Trace average at least 100 traces in power averaging (i.e., RMS) mode.
i) Compute power by integrating the spectrum across the OBW of the signal using the instrument's band power measurement function, with band limits set equal to the OBW band edges. If the instrument does not have a band power function, sum the spectrum levels (in power units) at intervals equal to the RBW extending across the entire OBW of the spectrum.

8.2.5 Test Results

Temperature:	23° C
Relative Humidity:	56%
ATM Pressure:	1011 mbar

Operation Mode	Channel Number	Channel Frequency (MHz)	Measurement Level (dBm)	Limit (dBm)	Verdict
802.11b	1	2412	14.04	30	PASS
	6	2437	13.97	30	PASS
	11	2462	13.75	30	PASS
802.11g	1	2412	13.01	30	PASS
	6	2437	13.41	30	PASS
	11	2462	13.20	30	PASS
802.11n (HT20)	1	2412	11.57	30	PASS
	6	2437	12.14	30	PASS
	11	2462	12.18	30	PASS
802.11n (HT40)	3	2422	10.91	30	PASS
	5	2437	11.39	30	PASS
	7	2452	11.74	30	PASS

Test Model	Duty cycle 802.11b Channel 1: 2412MHz

Test Model	Duty cycle 802.11g Channel 1: 2412MHz

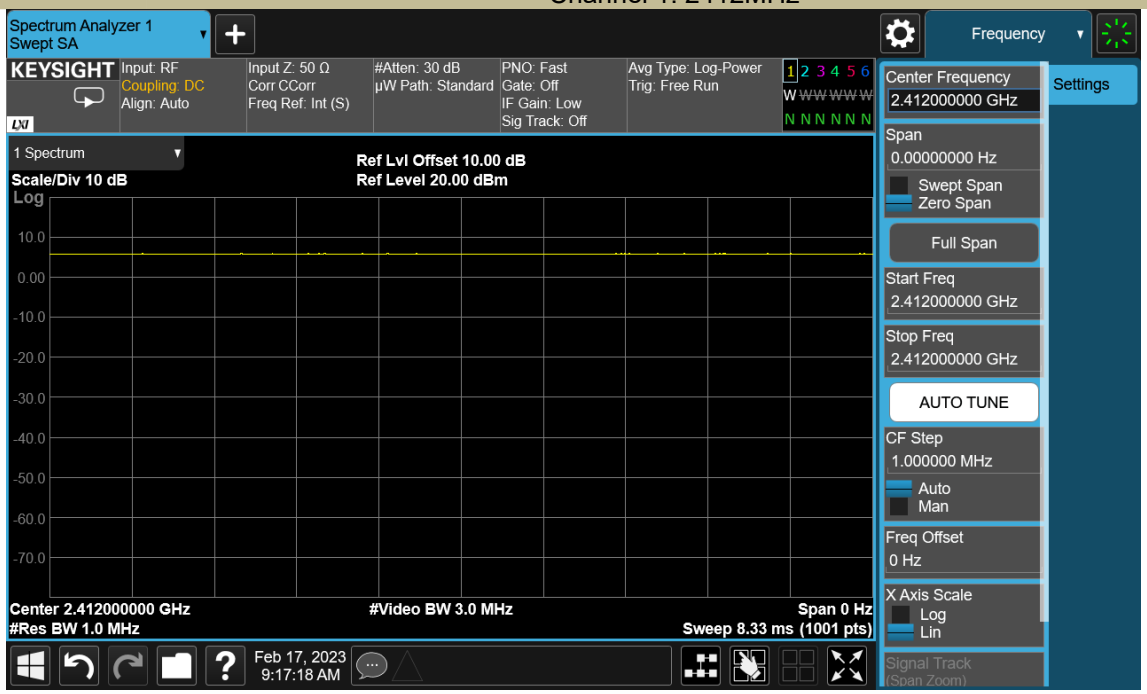

Test Model	Duty cycle 802.11n(HT20) Channel 1: 2412MHz

Test Model	Duty cycle 802.11n(HT40) Channel 3: 2422MHz

Test Model	MAXIMUM CONDUCTED(AVERAGE) OUTPUT POWER 802.11b Channel 1: 2412MHz

Test Model	MAXIMUM CONDUCTED(AVERAGE) OUTPUT POWER 802.11b Channel 6: 2437MHz

Test Model	MAXIMUM CONDUCTED(AVERAGE) OUTPUT POWER 802.11b Channel 11: 2462MHz

Test Model	MAXIMUM CONDUCTED(AVERAGE) OUTPUT POWER 802.11g Channel 1: 2412MHz

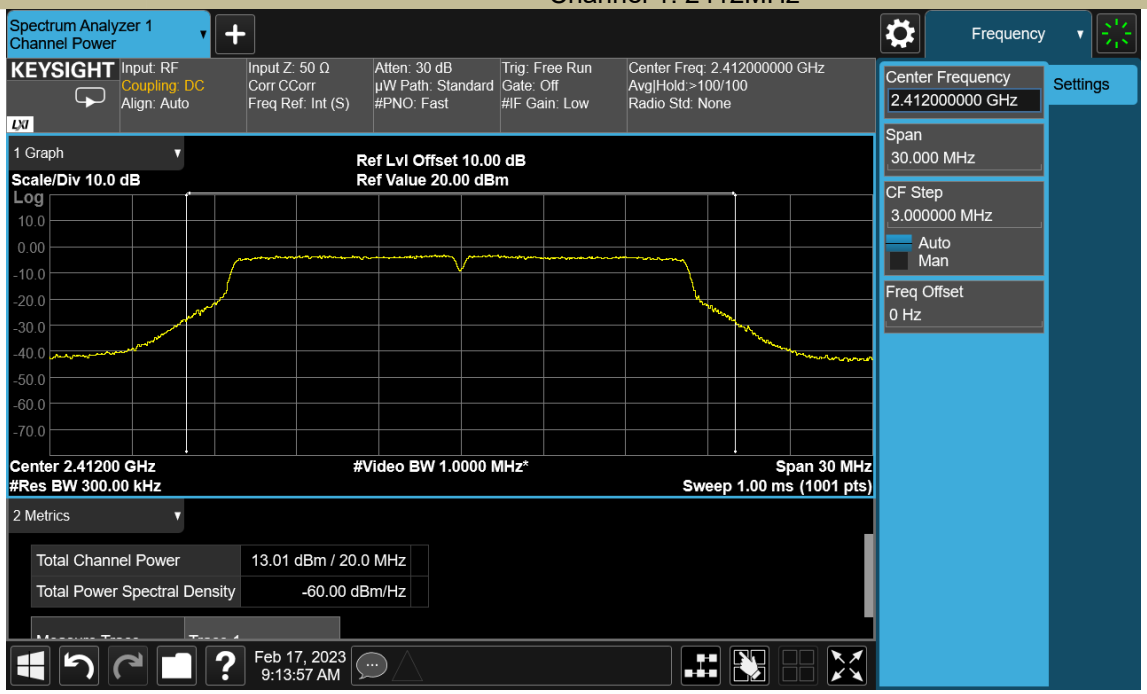

Test Model	MAXIMUM CONDUCTED(AVERAGE) OUTPUT POWER 802.11g Channel 6: 2437MHz

Test Model	MAXIMUM CONDUCTED(AVERAGE) OUTPUT POWER 802.11g Channel 11: 2462MHz

Test Model	MAXIMUM CONDUCTED(AVERAGE) OUTPUT POWER 802.11n(HT20) Channel 1: 2412MHz

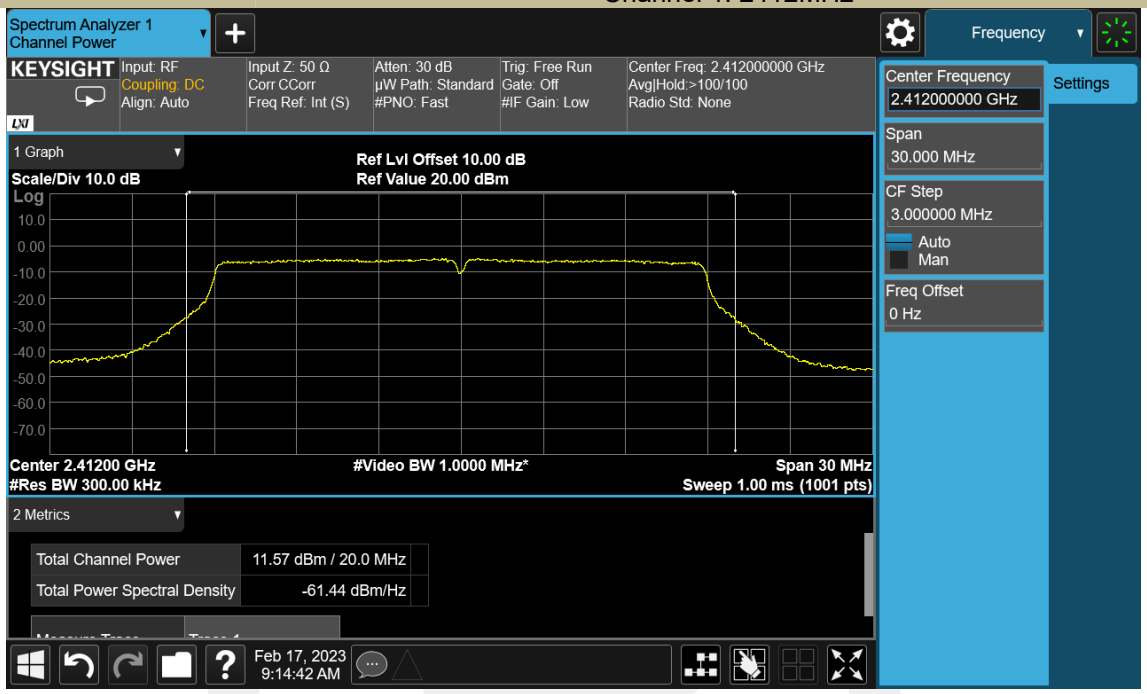

Test Model	MAXIMUM CONDUCTED(AVERAGE) OUTPUT POWER 802.11n(HT20) Channel 6: 2437MHz

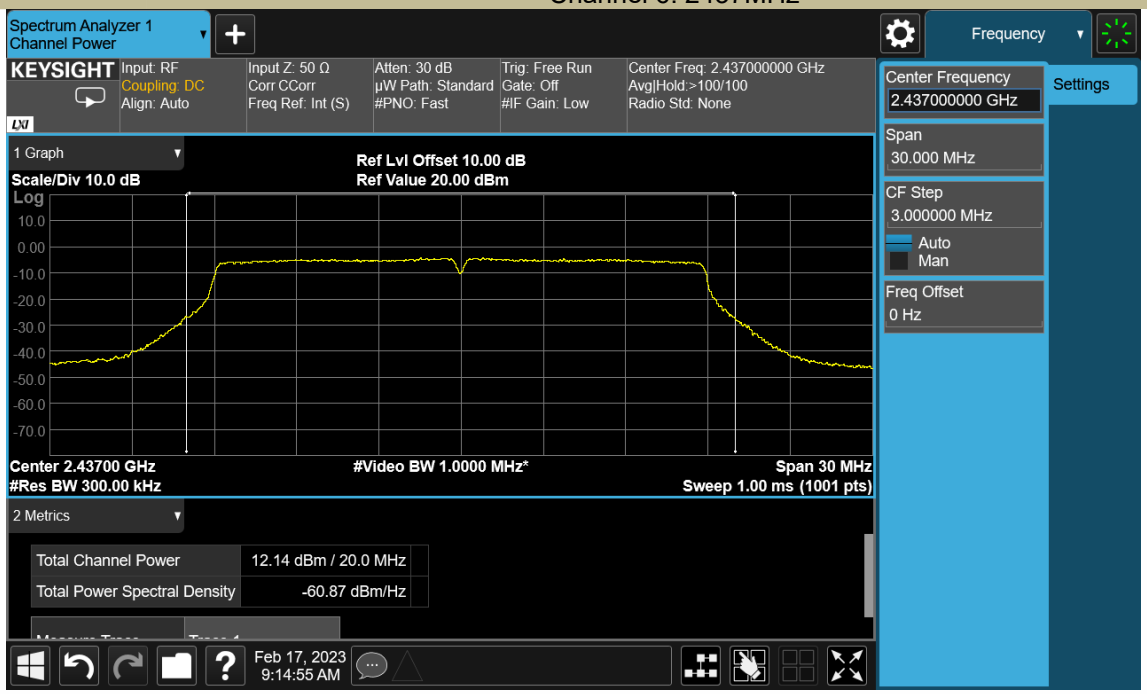

Test Model	MAXIMUM CONDUCTED(AVERAGE) OUTPUT POWER 802.11n(HT20) Channel 11: 2462MHz

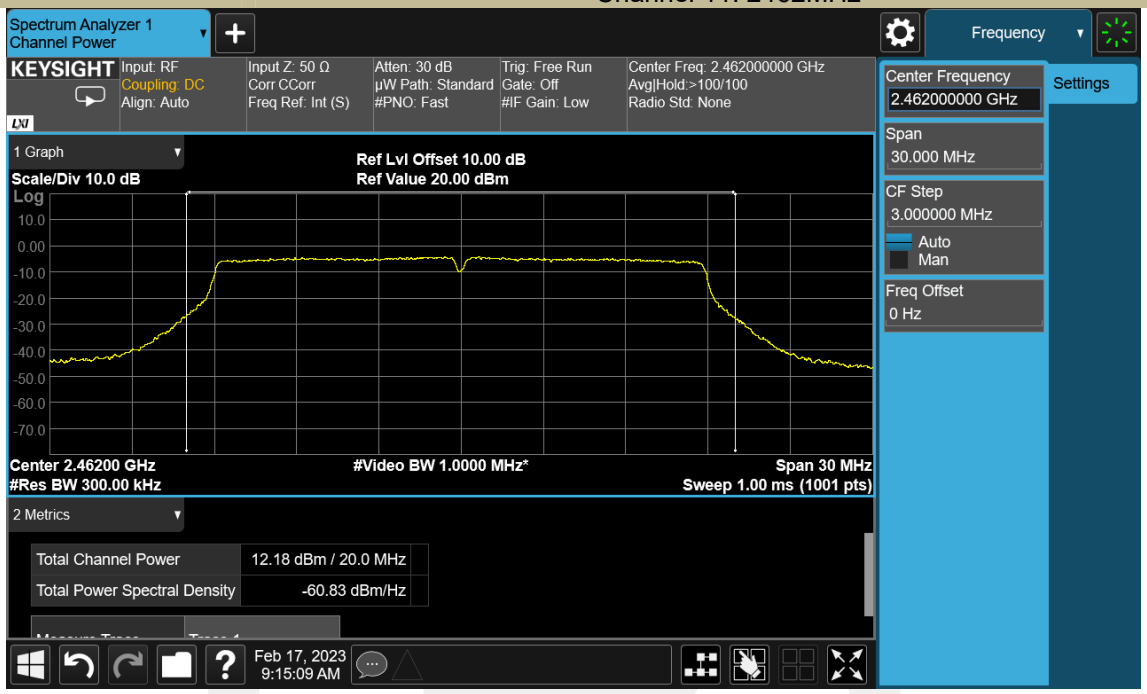

Test Model	MAXIMUM CONDUCTED(AVERAGE) OUTPUT POWER 802.11n(HT40) Channel 3: 2422MHz

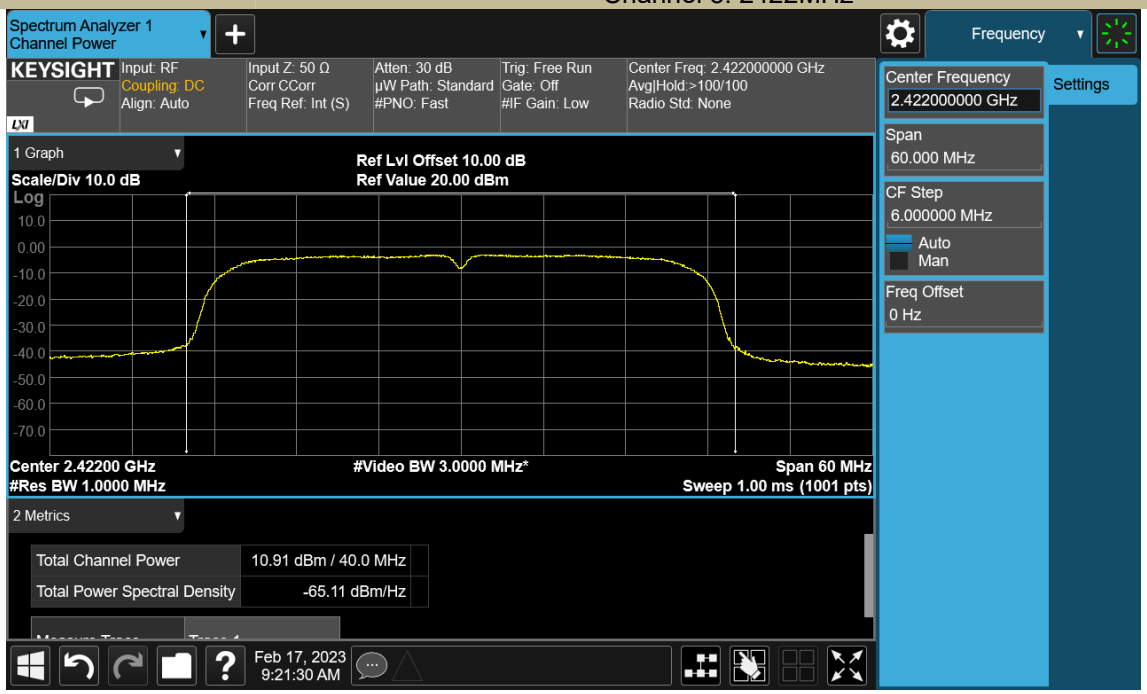

Test Model	MAXIMUM CONDUCTED(AVERAGE) OUTPUT POWER 802.11n(HT40) Channel 6: 2437MHz

Test Model	MAXIMUM CONDUCTED(AVERAGE) OUTPUT POWER 802.11n(HT40) Channel 9: 2452MHz

8.3 MAXIMUM POWER SPECTRAL DENSITY

8.3.1 Applicable Standard

According to FCC Part15.247(e) and KDB 558074 D01 15.247 Meas Guidance v05r02

8.3.2 Conformance Limit

The transmitter power spectral density conducted from the transmitter to the antenna shall not be greater than 8 dBm in any 3 kHz band during any time interval of continuous transmission.

8.3.3 Test Configuration

Test according to clause 7.1 radio frequency test setup 1

8.3.4 Test Procedure

This procedure shall be used if maximum peak conducted output power was used to demonstrate compliance
The transmitter output (antenna port) was connected to the spectrum analyzer
Set analyzer center frequency to DTS channel center frequency.
Set the span to 1.5 times the DTS bandwidth.
Set the RBW to: 3 kHz
Set the VBW to:10 kHz.
Set Detector = peak.
Set Sweep time = auto couple.
Set Trace mode = max hold.
Allow trace to fully stabilize.
Use the peak marker function to determine the maximum amplitude level within the RBW.
Note: If antenna Gain exceeds 6 dBi, then PSD Limit=8-(Gain- 6)

8.3.5 Test Results

Temperature:	23° C
Relative Humidity:	56%
ATM Pressure:	1011 mbar

Operation Mode	Channel Number	Channel Frequency (MHz)	Measurement Level (dBm/3kHz)	Limit (dBm/3kHz)	Verdict
802.11b	1	2412	-7.29	8	PASS
	6	2437	-6.43	8	PASS
	11	2462	-6.65	8	PASS
802.11g	1	2412	-12.94	8	PASS
	6	2437	-11.33	8	PASS
	11	2462	-11.91	8	PASS
802.11n (HT20)	1	2412	-12.21	8	PASS
	6	2437	-11.40	8	PASS
	11	2462	-12.15	8	PASS
802.11n (HT40)	3	2422	-14.28	8	PASS
	6	2437	-14.13	8	PASS
	9	2452	-14.50	8	PASS

Test Model	Power Spectral Density 802.11b Channel 1: 2412MHz

Test Model	Power Spectral Density 802.11b Channel 6: 2437MHz

Test Model	Power Spectral Density 802.11b Channel 11: 2462MHz

Test Model	Power Spectral Density 802.11g Channel 1: 2412MHz

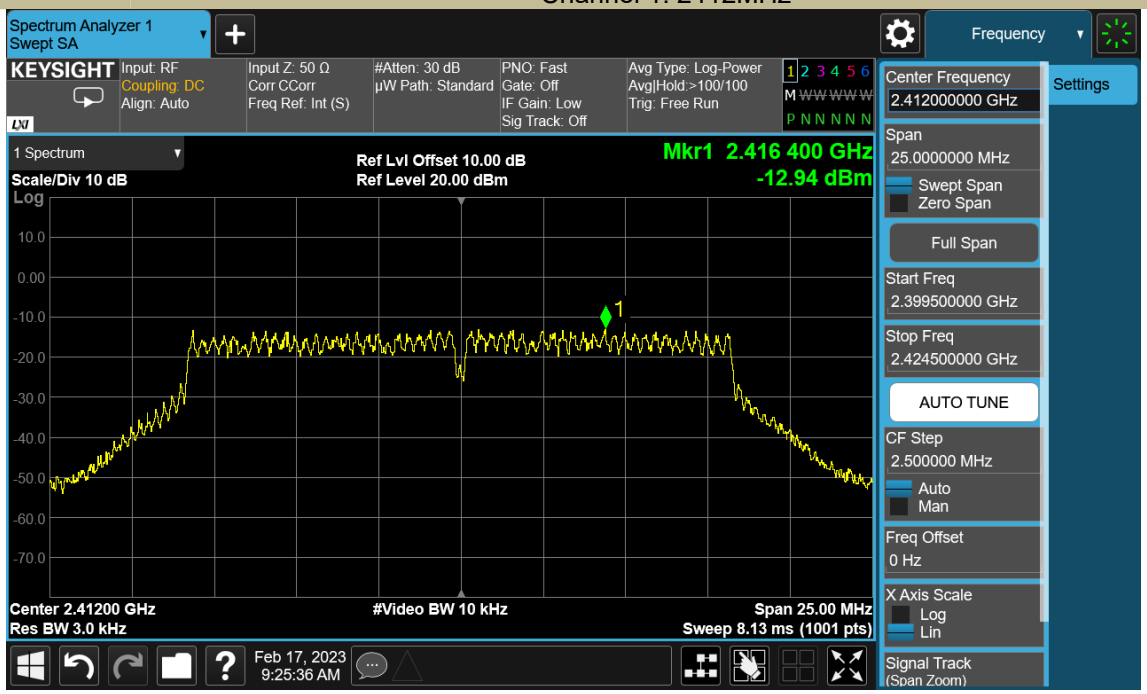

Test Model	Power Spectral Density 802.11g Channel 6: 2437MHz

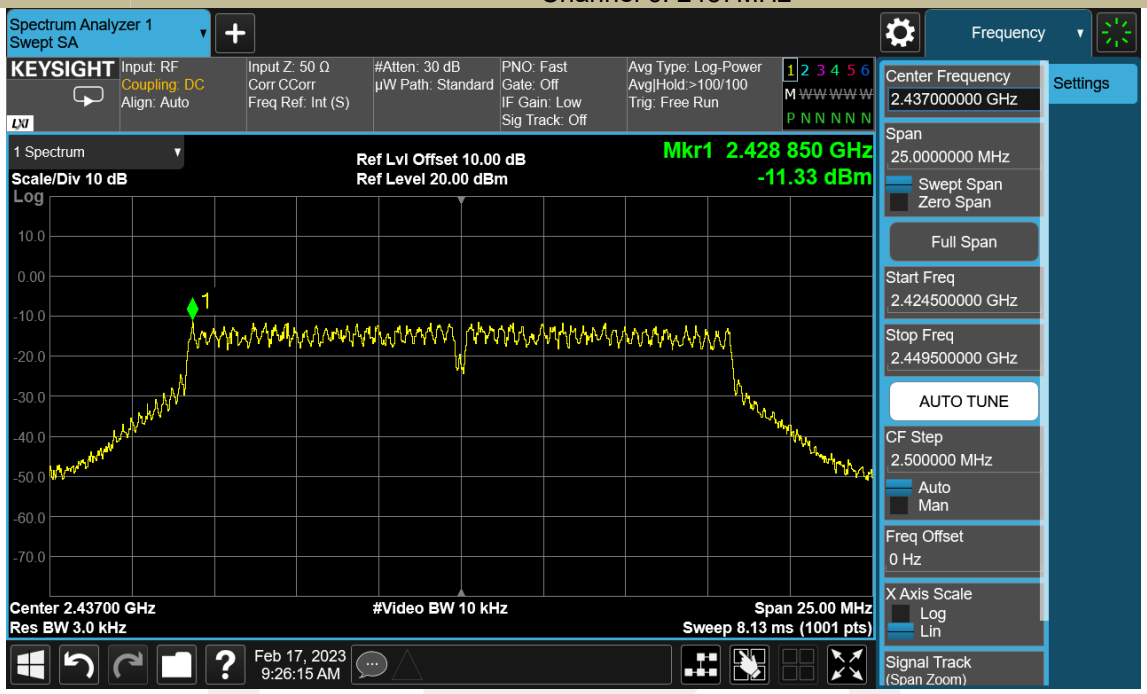

Test Model	Power Spectral Density 802.11g Channel 11: 2462MHz

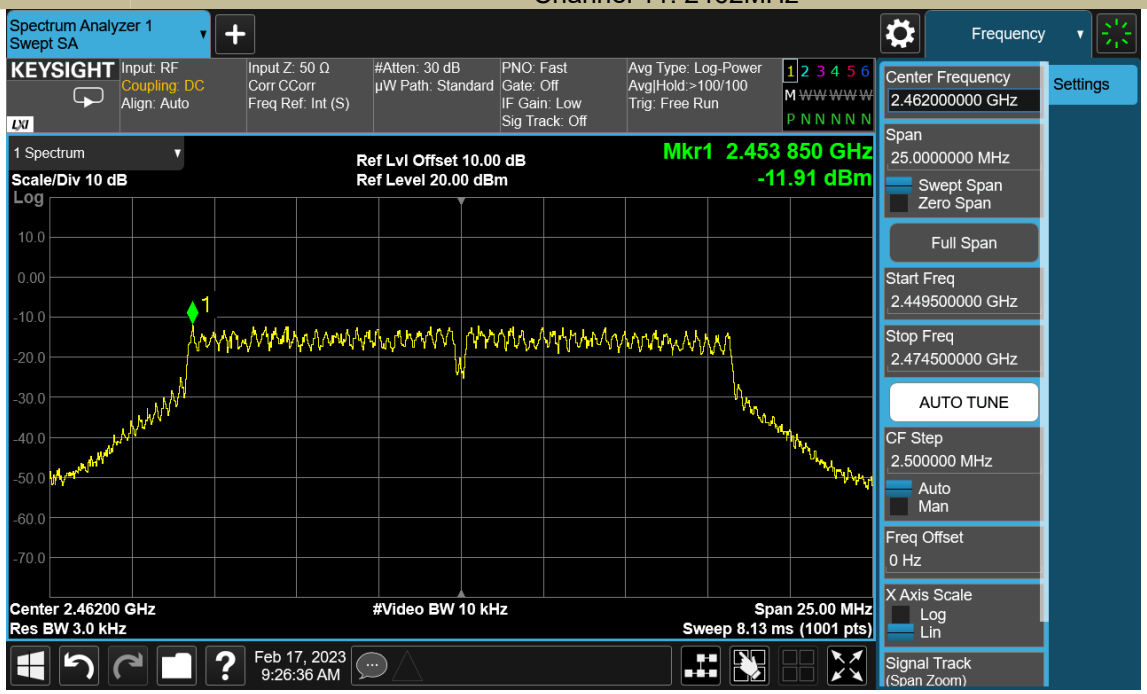

Test Model	Power Spectral Density 802.11n (HT20) Channel 1: 2412MHz

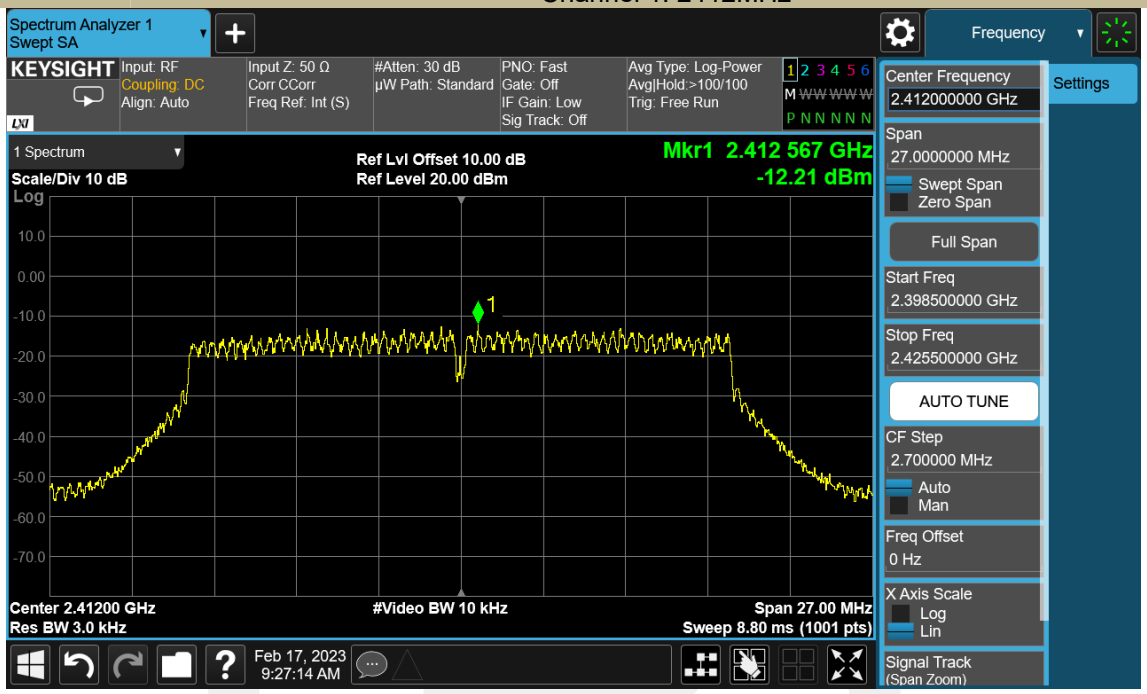

Test Model	Power Spectral Density 802.11n (HT20) Channel 6: 2437MHz

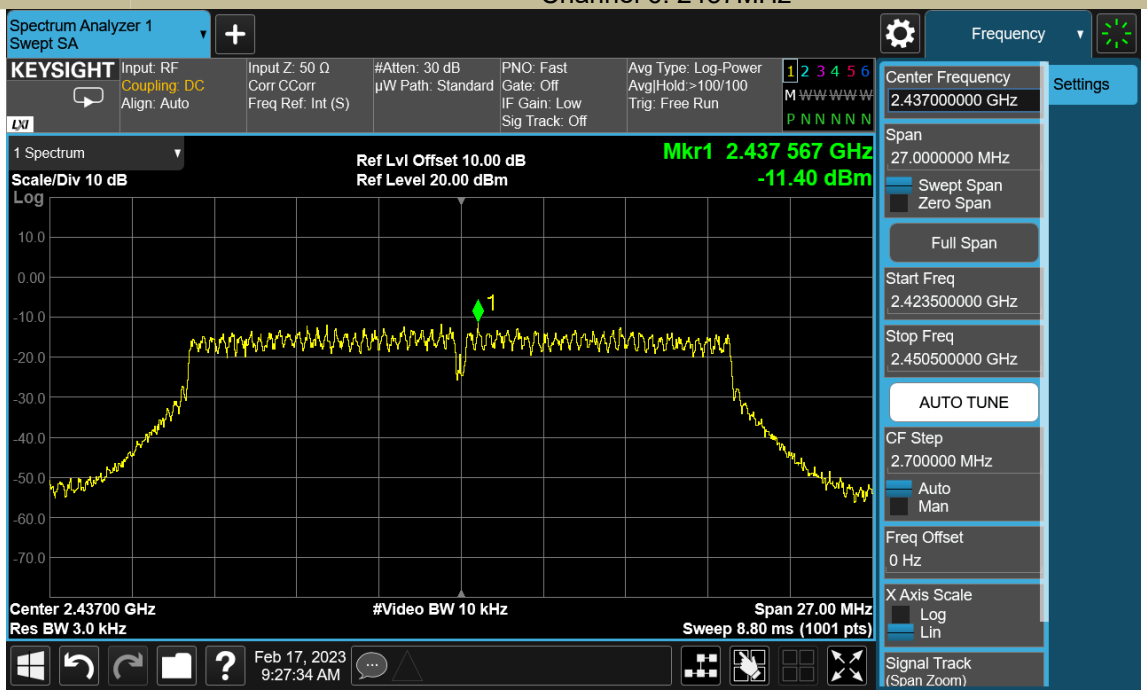

Test Model	Power Spectral Density 802.11n (HT20) Channel 11: 2462MHz

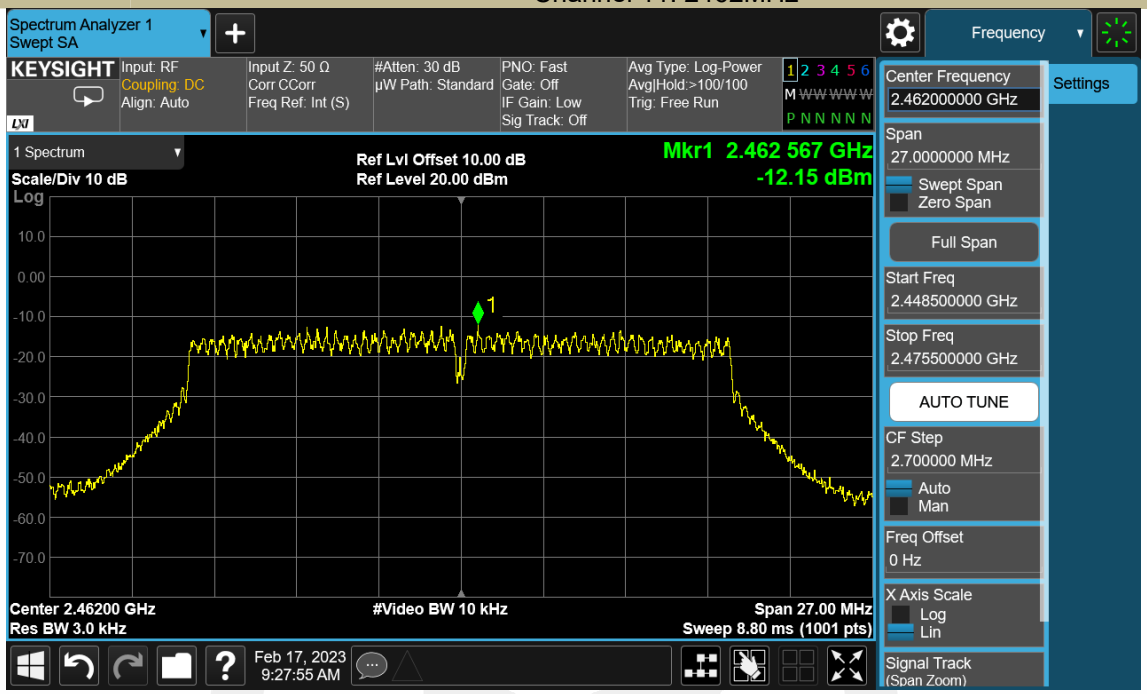

Test Model	Power Spectral Density 802.11n (HT40) Channel 3: 2422MHz

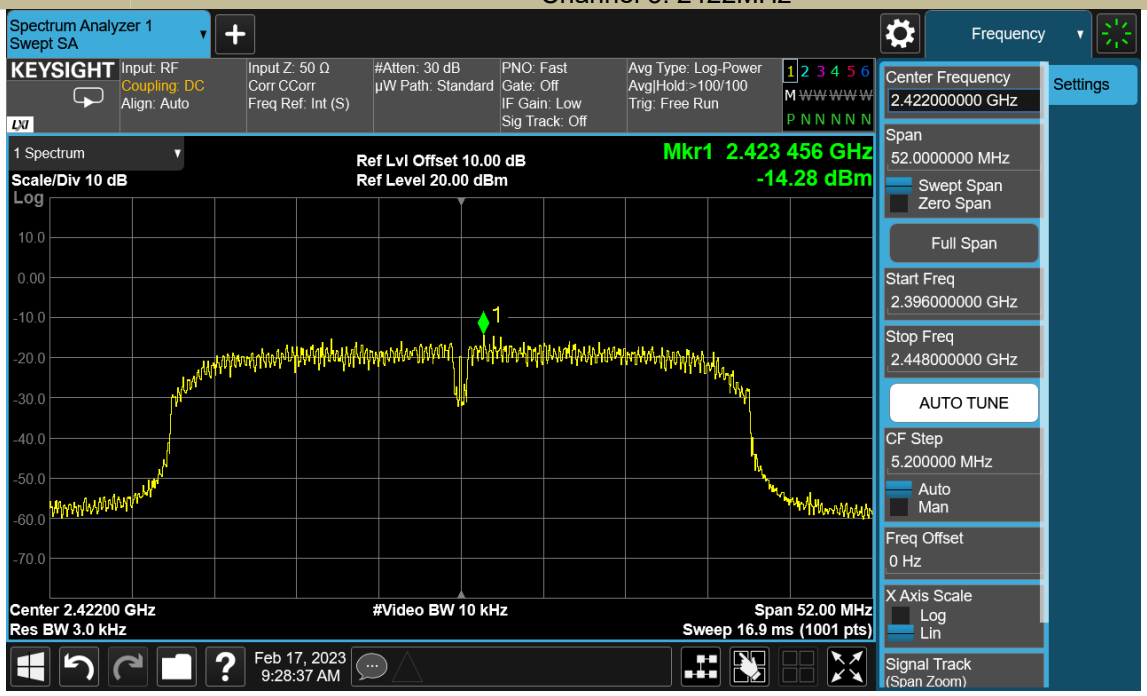

Test Model	Power Spectral Density 802.11n (HT40) Channel 6: 2437MHz

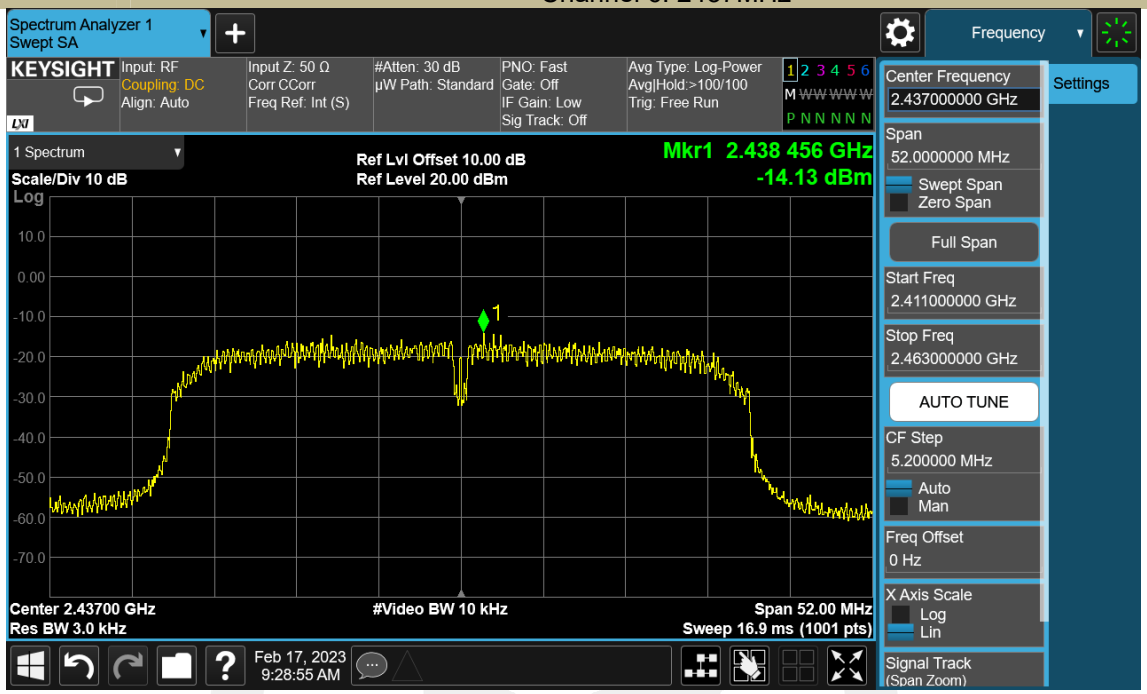

Test Model	Power Spectral Density 802.11n (HT40) Channel 9: 2462MHz

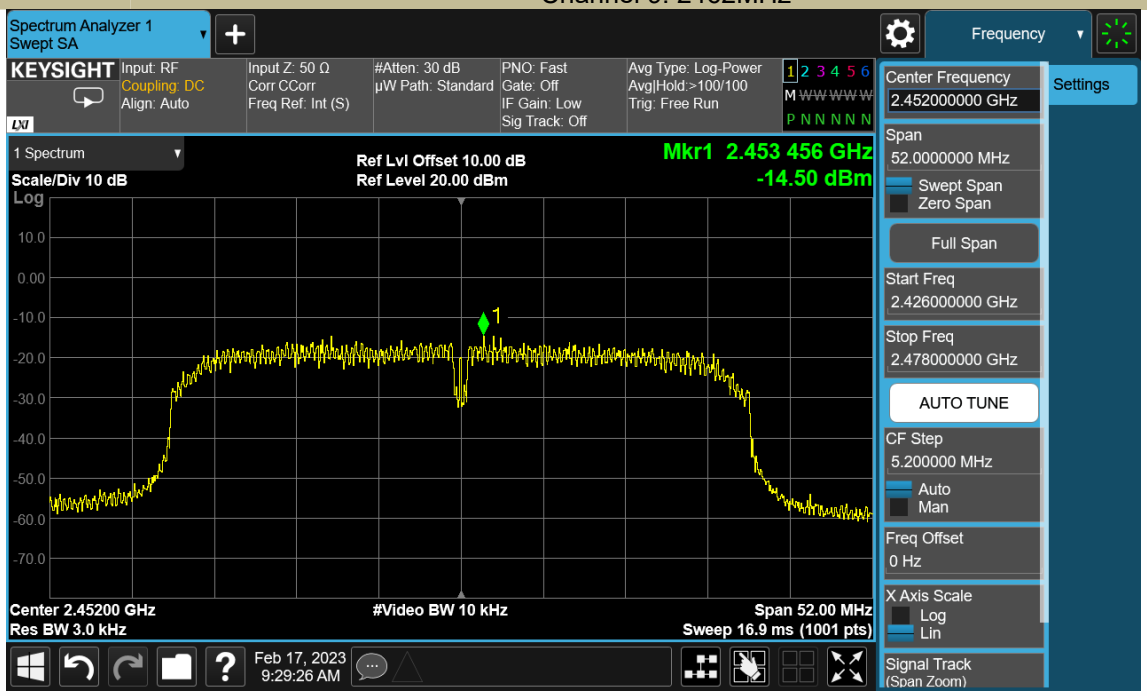

8.4 NWANTED EMISSIONS IN NON-RESTRICTED FREQUENCY BANDS

8.4.1 Applicable Standard

According to FCC Part15.247(d) and KDB 558074 D01 15.247 Meas Guidance v05r02

8.4.2 Conformance Limit

According to FCC Part 15.247(d):
In any 100 kHz bandwidth outside the frequency band in which the spread spectrum or digitally modulated intentional radiator is operating, the radio frequency power that is produced by the intentional radiator shall be at least 20 dB below that in the 100 kHz bandwidth within the band that contains the highest level of the desired power, based on either an RF conducted or a radiated measurement, provided the transmitter demonstrates compliance with the peak conducted power limits. If the transmitter complies with the conducted power limits based on the use of RMS averaging over a time interval, as permitted under paragraph (b)(3) of this section, the attenuation required under this paragraph shall be 30 dB instead of 20 dB.

8.4.3 Test Configuration

Test according to clause 7.1 radio frequency test setup 1

8.4.4 Test Procedure

The transmitter output (antenna port) was connected to the spectrum analyzer

- **Reference level measurement**

Establish a reference level by using the following procedure:
Set instrument center frequency to DTS channel center frequency.
Set the span to ≥ 1.5 times the DTS bandwidth.
Set the RBW = 100 kHz.
Set the VBW ≥ 3 x RBW.
Set Detector = peak.
Set Sweep time = auto couple.
Set Trace mode = max hold.
Allow trace to fully stabilize.
Use the peak marker function to determine the maximum PSD level.
Note that the channel found to contain the maximum PSD level can be used to establish the reference level.

- **Emission level measurement**

Set the center frequency and span to encompass frequency range to be measured.
Set the RBW = 100 kHz.
Set the VBW =300 kHz.
Set Detector = peak
Sweep time = auto couple.
Trace mode = max hold.
Allow trace to fully stabilize.
Use the peak marker function to determine the maximum amplitude level.
Ensure that the amplitude of all unwanted emissions outside of the authorized frequency band (excluding restricted frequency bands) are attenuated by at least the minimum requirements . Report the three highest emissions relative to the limit.

8.4.5 Test Results

All modes 2.4G 802.11b/g/n have been tested, and the worst result 802.11b recorded was report as below:

Test Model	PSD(Power Spectral Density) 802.11b Channel 1: 2412MHz

Test Model	Unwanted Emissions In Non-Restricted Frequency Bands 802.11b Channel 1: 2412MH

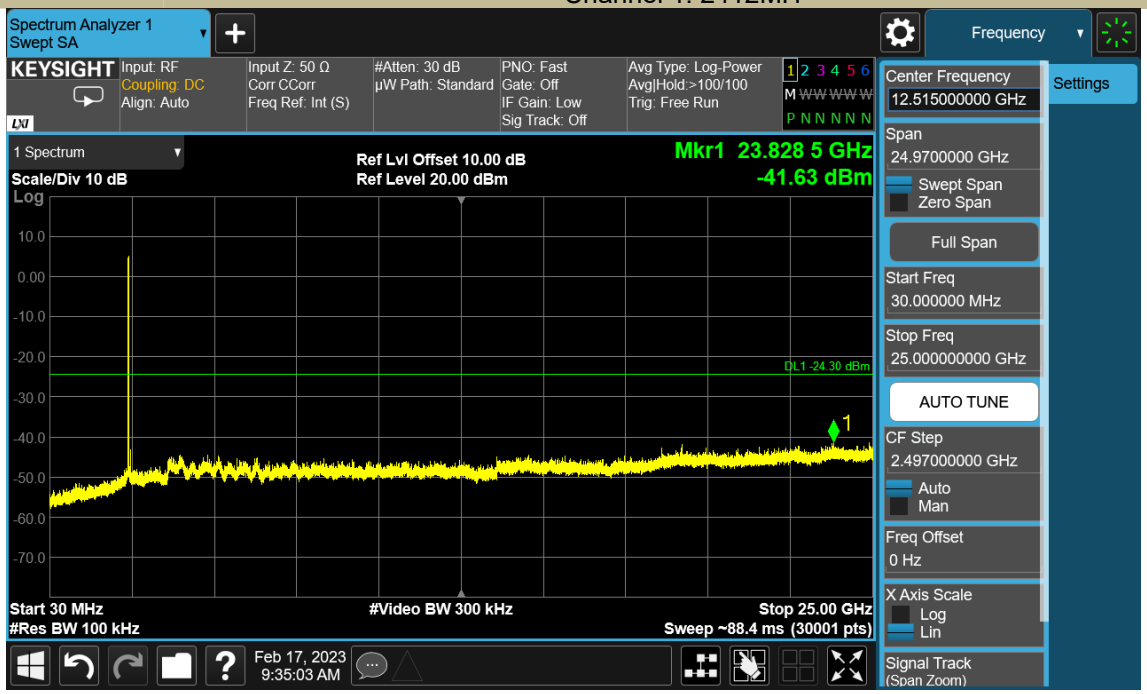

Test Model	Band edge 802.11b Channel 1: 2412MH

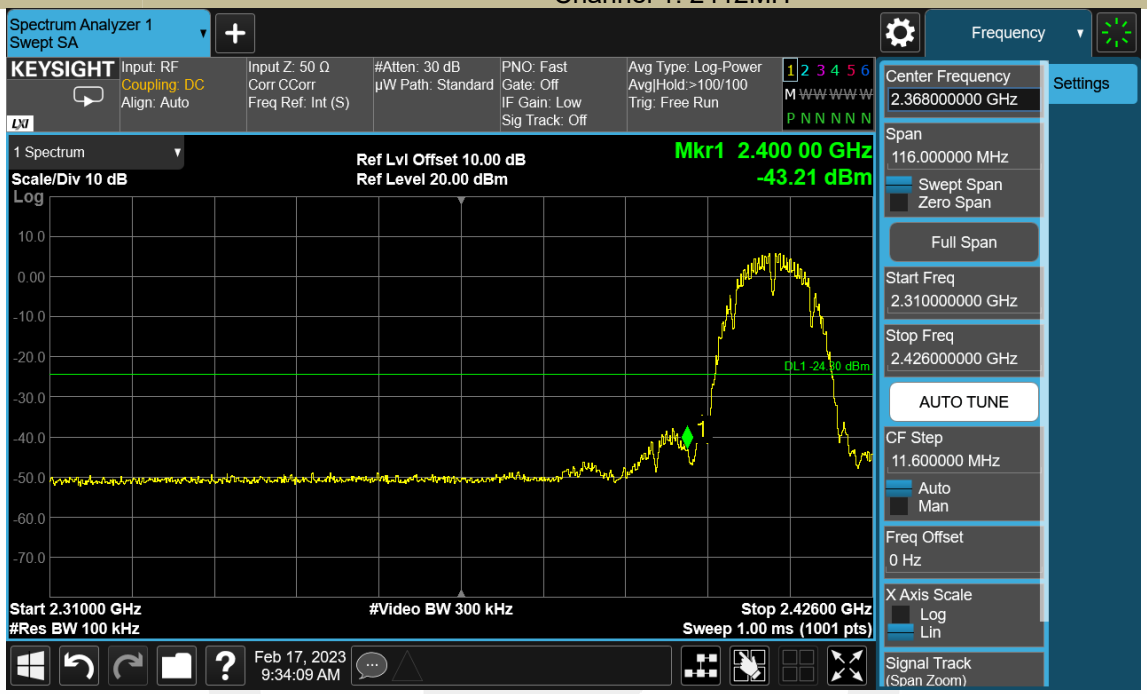

Test Model	PSD(Power Spectral Density) 802.11b Channel 6: 2437MHz

Test Model	Unwanted Emissions In Non-Restricted Frequency Bands 802.11b Channel 6: 2437MH

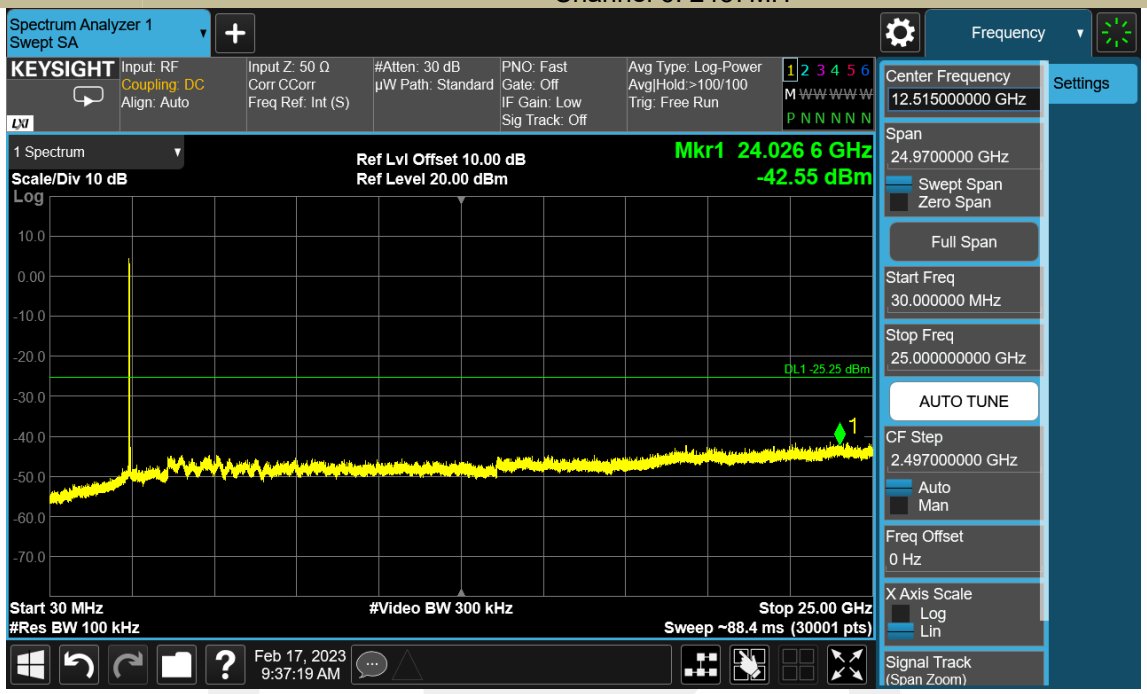

Test Model	PSD(Power Spectral Density) 802.11b Channel 11: 2462MHz

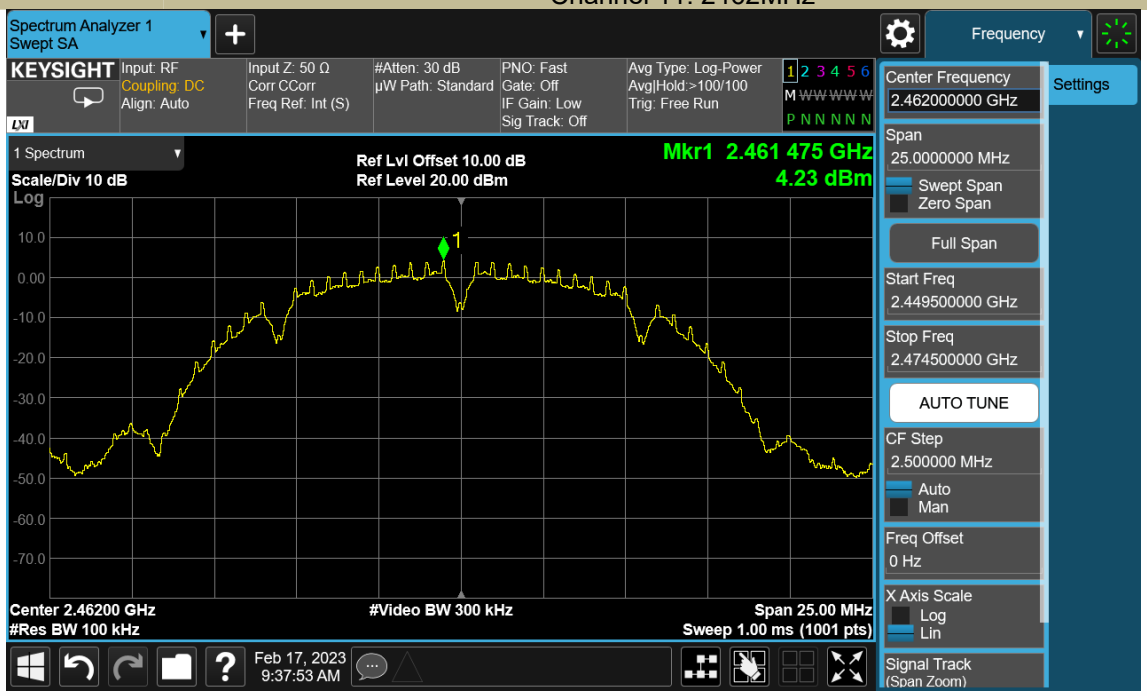

Test Model	Unwanted Emissions In Non-Restricted Frequency Bands 802.11b Channel 11: 2462MH

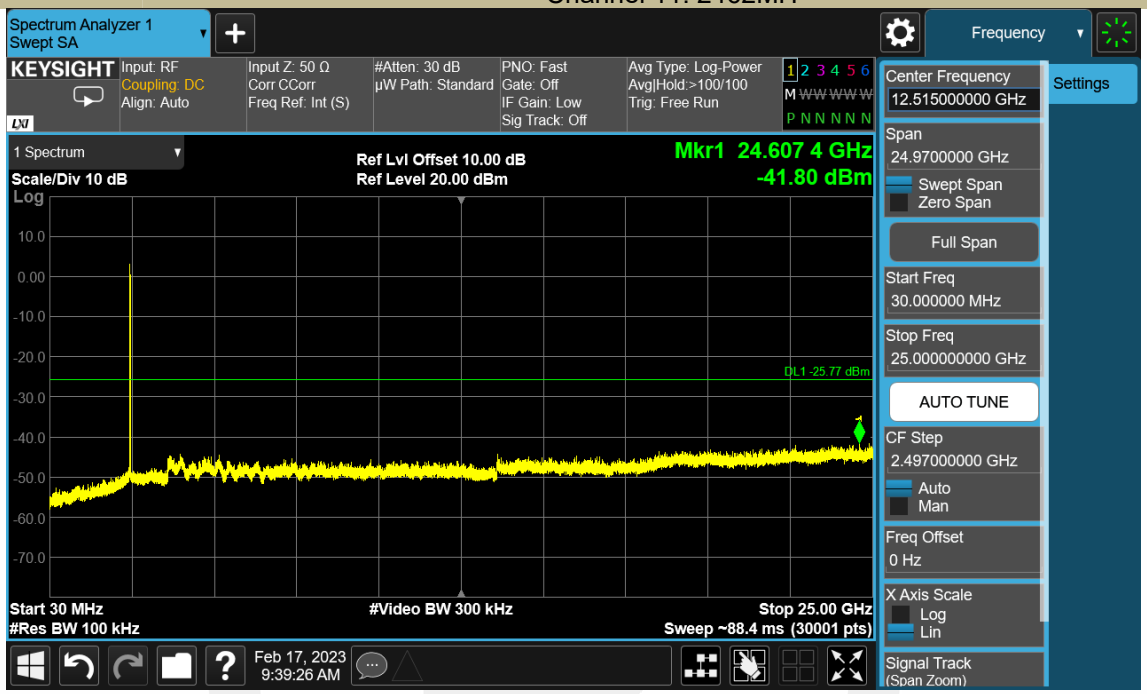
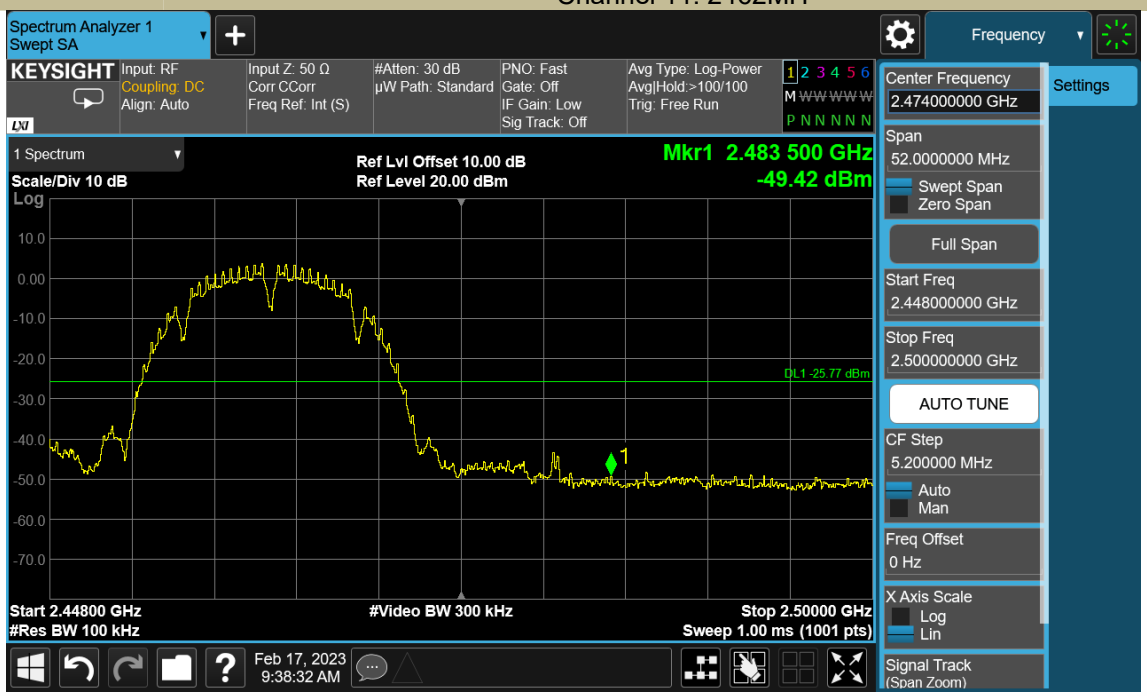
Test Model	Band edge 802.11b Channel 11: 2462MH