SHINING 3D

EINSCAN LIBRE

1.0.0

User Manual

Table of Contents

Welcome

- **Meet EinScan Libre**
- **Getting Started**
  - About EinScan Libre
  - About Scan
  - About EXScan Libre
- **Scan Light Source**
- **Introduction**
- **Product specifications**
- **Technical specifications**

First Steps with EinScan Libre

- **First Time Login**
- **Connect to a Wi-Fi Network**
- **Activation**
- **Charge Battery**
- **Home Page Overview**
- **Icon Guide**
- **Other Settings**

Scan

- **Scanning Workflow**
- Pre-scanning
  - **Preparation**
  - **Create a Project File**
  - **Scan Mode**
  - **Scan Interface**
- Scanning
  - **Preview**

- Scan Settings
- Start Scanning
- Pause and Resume Scan

- Post-scanning
  - Gesture Interaction
  - Data Editing
  - Meshing

Data Transmission

- USB Transfer
- Wireless Transfer
- Wired Transfer

Calibration

- Calibration Notices
- Quick Calibration
- White balance

Accessories

- Replace Battery
  - Remove the Battery
  - Install the Battery
- Calibration Board and Scale Bar

Safety Information

- Welcome
  - Symbol conventions
  - About the user manual
- Laser Information
  - Labels
- Contact

Welcome

Meet EinScan Libre

EinScan Libre is a professional handheld 3D scanner with built-in a full-process computing unit for scanning and meshing. It can complete scanning task and optimize the model data independently.

Equipped with six cameras and projectors, the EinScan Libre leverages excellent optical technology and intelligent algorithms to scan complex objects with various surface types. It excels in various applications, delivering reliable performance regardless of the object's size while meeting the demands of high-precision scanning.

It integrates standalone software, a built-in display screen, and a lightweight design for easy, portable scanning.

- **Wireless Scanning:** Wireless connections provide convenience and mobility, enabling flexibility switching between various scanning scenarios.
- **No limit to the size:** By utilizing dual-range cameras with a large depth of field, it can effortlessly capture objects of various sizes, ranging from small to large.
- **Color Capture:** It uses a 48 MP high-resolution texture camera, supporting capture realistic scans in vivid color.
- **High-precision Scanning:** It offers a 0.045mm accuracy to reliably scan objects, meeting professional requirements.
- **Export Data:** It allows flexible export of scan project files.

Getting Started

This chapter provides an overview guide for EinScan Libre handheld 3D scanner and its accompanying desktop post-processing software EXScan Libre, making it easy for you to find the corresponding instructions.

About EinScan Libre

You can learn about the scanner here, including the appearance & specification of the scanner and its scan mode.

→ What light sources does EinScan Libre support?

→ Introduction to the scanner

→ Specification of the scanner

→ Introduction to interface icons

→ What scan mode are supported?

→ How to replace the battery?

→ How to connect Wi-Fi network?

→ How to activate the scanner?

→ How to charge the battery?

About Scan

After activation, follow the steps below to use the scanner.

1 Calibrate the Scanner

Calibration ensures the accuracy of the scanner and improves the scanning quality.

→ How to prepare for calibration?

Calibration Order:
Quick Calibration > White Balance

2 Select Scan Mode

Before scanning, you need to select the scanning mode.
According to the different objects being scanned, you can select **Rapid Mode** or **HD Mode**.

→ Introduction to scan mode

→ Introduction to scan interface

3 Create Multiple Projects

→ How to create a project?

4 Preparation

→ Scan workflow

→ Prepare object and surroundings

→ How to set scanning parameters?

5 Scanning

After creating multiple projects, you can start scanning and set scanning parameters to scan.

→ Pre-scan

→ Setting Parameters

→ scan

→ What to do when tracking is lost?

6 Edit Data

You can obtain accurate data by editing scan data in or after scanning.

→ How to edit scan data?

→ How to generate a mesh?

→ Gesture Interaction

7 Transfer Data

After completing the scan, you can transfer the scanned data from the scanner to the software on PC for further data processing.

→ How to export data from scanner to PC using a USB flash drive?

→ How to transfer data over Wi-Fi?

→ How to transfer data in wired?

About EXScan Libre

You can learn about the desktop software here, including its function list and interface overview.

1 Running Environment

Please install the software according to the recommended operating environment.

→ Running Environment and Installation

→ Introduction to the EXScan Libre software interface

2 Open Project File

After opening a project file, you can edit and post-process scan data.

→ How to open a project file?

3 Edit the Data

4 Mesh Optimization

→ How to edit the data?

→ How to adjust distance?

→ Alignment

→ Meshing

→ Mesh Optimization

5 Measurement

After editing data, you can post-processing or measurements on the data.

→ How to create features?

→ How to align models?

→ How to measure model?

6 Share

Supports sharing with third-party design software.

→ How to save the model data?

→ How to share a model?

→ How to export a model data?

Scan Light Source

EinScan Libre combines a blue laser light source and a LED light source with infrared, providing both the rapid and HD scanning mode, which makes it easy to obtain high-quality 3D data of black and reflective materials. It also features a built-in texture camera that captures full-color textures on the object's surface in real-time.

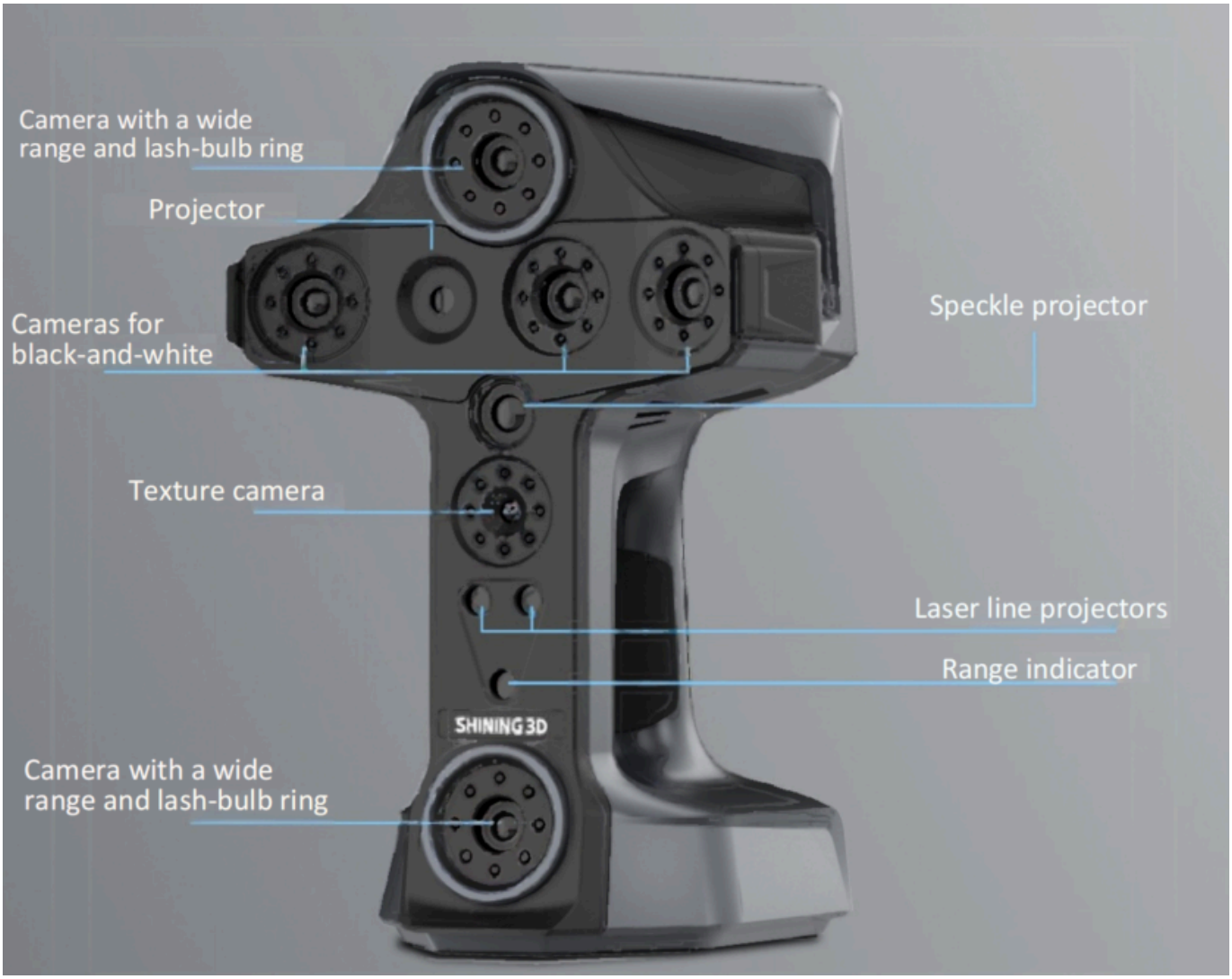

Caution

Turning on the **Range Indicator Box** will project the scanning range (indicated by a green box) and the scanning center point when scanning.

Introduction

The EinScan Libre is equipped with a built-in screen and battery, allowing for easy scanning of various objects.

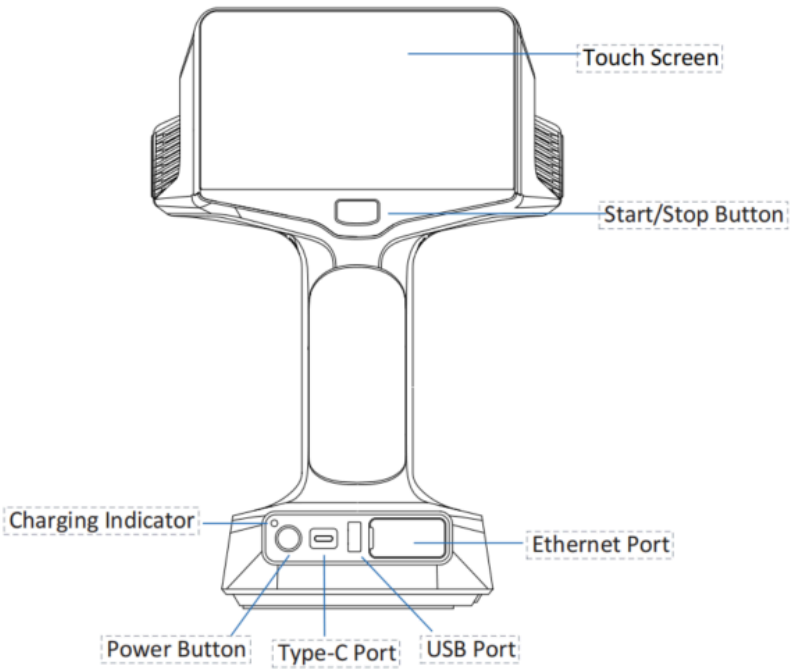

- **Touch Screen:**
  See the model data in real time

- **Power Button:**
  Press to turn on
  Press and hold for 3 seconds or more to turn off
  Press and hold for 6 seconds or more to force shutdown

- **Battery Indicator:**
  Green: Scanner is full charged
  Blue: Scanner is charging

Product specifications

Parameter	Description
Name	EinScan Libre
Scanner type	Handheld
Accuracy	Up to 0.04 mm
Resolution	• Rapid (IR): 0 .5- 10 mm • Rapid (laser): 0 .5- 10 mm • HD: 0.05 - 3 mm
Data acquisition speed	• Rapid (IR): 27 mln points/s • Rapid (laser): 27 mln points/s • HD: 22.55 mln points/s
Working distance	• Rapid (IR): 500 - 1500 mm • Rapid (laser): 500 - 1200 mm • HD: 200 - 500 mm
Scan field	• Rapid: 410 × 549 - 983 × 979 mm • HD: 278 × 279 - 382 × 450 mm
Output formats	3D mesh: STL, OBJ, PLY, 3MF, ASC
Dimensions (H × D × W)	162 × 182 × 266 mm

Technical specifications

Parameter	Description
CPU	NVIDIA(®) NX 16 GB
Memory	16 GB + 32 GB
Display	Integrated 5.44" touchscreen
Resolution	Up to 0.2 mm
Power supply	Built-in exchangeable lithium battery. Compatible with power bank with 100W output. Optional AC power
Connection Method	Wireless Wi-Fi (optional)
Hard Drive	1 TB

First Steps with EinScan Libre

First Time Login

Once the scanner is turned on, it will show the greeting screen with the **License Agreement**. Follow the steps below:

Language

Select Language

Please choose your preferred language.

User License

Read the License Agreement

Please read it carefully and check **I have read and agreed to the terms**, then choose whether to participate in the **User Experience**.

Time Zone

Set Time Zone

Choose the time zone according to your actual location.

Network Connection

Connect to Wi-Fi Network

Choose an available wireless network to connect to. Alternatively, you can skip this step. If you want to connect to a network later, refer to Wi-Fi Settings.

Account Login

Log in Shining 3D Passport

You can sign in using a verification code, password, or WeChat. For detailed instructions, please refer to Device Activation. You can also skip this step.

Operation Guide

New User Guide

Provides guidance on common operations, including power on/off, sleep mode, and scanning.

Connect to a Wi-Fi Network

Before performing wireless data transfer, software upgrades, or applying for authorization extension, please connect the scanner to the network in advance.

> ⚠ **Caution**
>
> After successfully connecting to the network, you can login the Shining Passport. For detailed instructions, please refer to Device Activation.

Steps

1. Go to **Settings** > **Network Settings**.
2. Click **Wi-Fi** to enable, and the page will display the detected network information.
3. Choose a wireless network and input the password to add the network.

Activation

The scanner needs to be activated by setting a SHINING 3D Passport. It supports login with password, verification code.

> ⚠ **Caution**
>
> - The device can only be logged into the SHINING 3D Passport after successfully connecting to the network.
> - If you do not have an account, please choose the verification code login.

Follow the instructions provided to complete the login process for the SHINING 3D Passport.

Charge Battery

It is recommended you charge the battery before use.

Caution

- Please charge the battery in time or its service life may be influenced. Please don't wait until the battery indicator is flashing orange.
- Please keep the battery away from fire or other inflammable and explosive materials.
- Do not impact, throw, or vibrate the battery.
- Use only batteries, cables and charging devices intended for EinScan Libre.
- Avoid leaving the charging case connected to the power source for an extended period. After using the charging case, disconnect the power supply.
- If the battery emits an odor, heats up, deforms, changes color, or shows any other abnormal signs, it must not be used. If any abnormal phenomena occur during battery use or charging, remove it from the device or charger immediately and stop using it.
- Never allow children access to a battery.
- When the battery is not used for a long time, its capacity may be decreased, and its service life and charging ability may be affected as well.
- Please keep the battery in a cool and dry place.
- Never allow naked flames near a battery.
- All spent batteries and waste arising from spillages and fires must be disposed of in conformance with the Environmental Protection Act, the Special Waste Regulations 1996 and the Environmental Protection (Duty of Care) Regulations 1991.

Note

- It is recommended not to use the scanner while it is charging.
- During charging, the battery indicator light will be blue. Once charging is complete, the indicator light will be green.

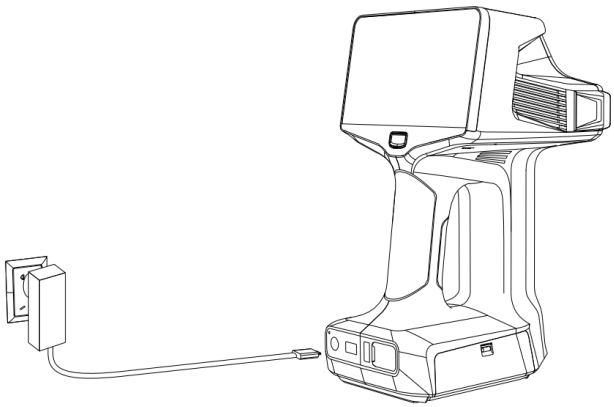

After installing the battery, connect the power cablefor charging. Or, use the included charging case for charging.

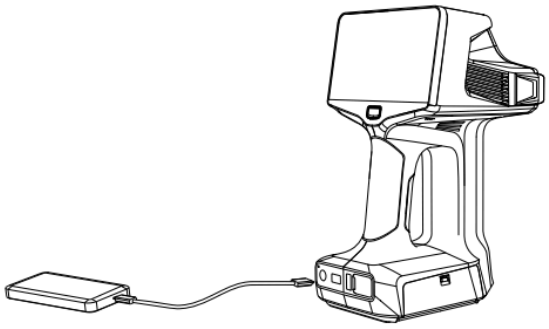

Supported power supply via an power bank

Home Page Overview

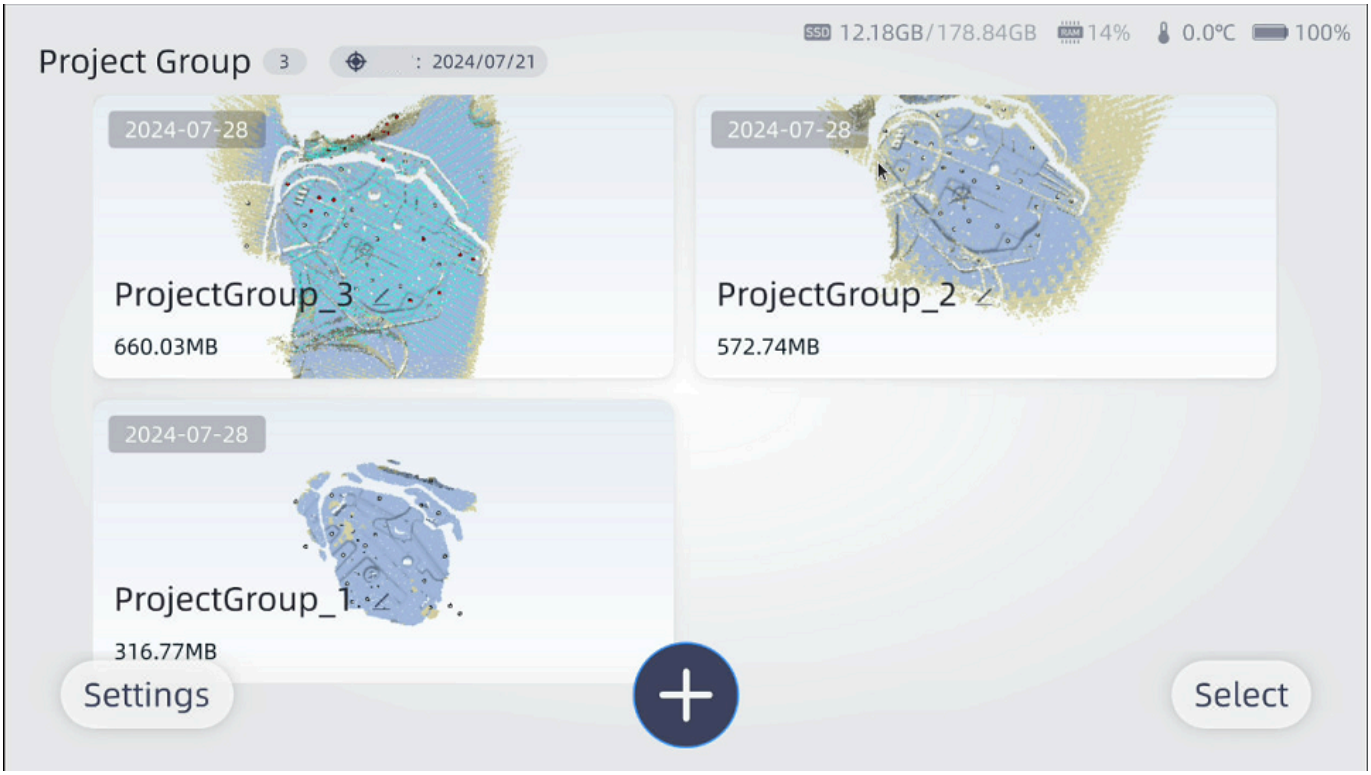

Modules	Description
Project Group	Display the number of project group.
Status Toolbar	Display the current scanner information, including network, temperature, battery usage, and more. For more details, refer to icon guide.
Settings	The settings allows you to perform calibration, authorize extension, network settings, and general device settings.
Select	The select module allows you to view the details of project files and edit the project group.
+	Access the option to create a new project.

On the screen, swipe downwards to reveal the control center. From there, you can quickly access the device calibration and other settings interfaces.

Note

- **Project group**
  - The screen displays not only the list of project groups, but also other display contents such as thumbnails of scanned models, scan data, project group names, and file sizes.
  - The model is shown as the thumbnails. If there are no project files within the project group, it will not be displayed.
  - The scan date will reflect the recent date of project file updates.
  - Modifying the project group name is supported. The name will be displayed up to 10 characters, with "..." displayed if it exceeds the limit.
- **Project**
  - Clicking a project group will display a list of projects within that project group.
  - Each project file will display detailed information about the project, such as its name, scan mode, alignment mode, point distance, etc.
  - After opening a project file, you can continue to scan or edit data.

Icon Guide

Status Icons

In the upper-right corner of the screen, you can view the scanner's current status.

Icon	Description	Icon	Description
	Unstable connection		Excellent signal
	No internet		Reliable signal
SSD	SSD usage percentage	RAM	RAM usage percentage
	USB flash drive inserted		Screen casting enabled
	Display scanner temperature		Battery charge level

Project Icons

Icon	Description	Icon	Description
	Delete selected project files		Export selected project files
	Rename project file		Enable texture for the project file
	Create a new project		

Scan Icons

Perform the following task when you need to set icons shown on screen.

Icon	Description	Icon	Description
	Pause scanning		Start scanning
	Enter preview mode		Data edit
	Delete all data		Switch to mesh data
	Edit mesh and set mesh parameters		Export the project file to the USB flash drive.

Icon	Description	Icon	Description
	Setting range indicator and data quality indicator		Adjust scan brightness
1.0	Modify resolution in the project file		Modify distance between model and scanner.
	Cutting Plane		

Icon	Description	Icon	Description
	Data edit		Switch to point cloud data
	Switch to marker		Select all data
	Connected Domain		Select all unselected data
	Deselect all		Undo the most recently operations
	Revert the most recently operations		Apply the edited, and exit edit mode

Other Settings

General Settings

Tap **Settings** > **General Settings** to enter general setting page.

- Language: select the language as desired.
- Time Zone: you can set it manually.
- Auto Sleep: when the device is not actively running or being used, it will enter sleep mode. In sleep mode, the screen turns off and the scanner stops projecting light. To wake up the device, simply press the power button.
- Range Indicator Box: when enabled, a green rectangular box will be projected onto the scanned object during the scanning process to determine the scanning range and target. The function is enabled by default.

Note

When the projector and the scanner are on the same local network, the projector icon is displayed in upper-right corner. You can tap icon to connect your projector to your scanner. They will be identified automatically and work immediately after being connected. The model on the screen can be projected onto another monitor.

Help

Tap **Settings** > **Help** to enter the help center page.
You can open the user manual and check contact information of technical support here.

Disk Storage

Tap **Settings** > **Storage** to enter the disk storage page.

- Storage: Displays the current storage used and available on the device.
- Cache: Displays the storage occupied by the cache. Clicking **Clear** will permanently delete cache.

Cache Type	Description
Logs	Keep only the logs for the current day and delete other log.
Images from failed calibration	All
Backup files	All
Installed package	All

Factory Default

Tap **Settings** > **Factory Default** to enter the factory default page.

> ⚠ **Caution**
>
> All settings can be restored to the initial settings, please proceed with caution.
> If you check **Delete all project group files**, all project files will be deleted and cannot be recovered. Please proceed with caution!

After confirming the factory reset, the screen will display an initialization progress bar. Once the initialization is complete, you will be taken back to the startup interface.

About

Click **Settings** > **About** to enter the scanner information page.

You can view related scanner information, software version, etc.

> ⚠ **Caution**
>
> If you are upgrading the software on the scanner, please ensure that it is successfully connected to the network and has sufficient storage and battery power (battery level > 30%).

Scan

Scanning Workflow

Preparation

Create a Project File

Please select the appropriate scan mode based on the actual scanned object and scene.

Prepare for scanning

Preview

Check scan quality and adjust scan parameters. Support brightness adjustment, distance settings, and scan settings.

Data capture

Scanning

Move the scanner to capture a series of frames. During scanning, support brightness adjustment, distance settings.

View results

Pause & Edit

Pause scanning to review the scan results. Support data editing and adjustment of point distance.

Generate mesh

Mesh

After generating point clouds, you can generate mesh and export files.

Pre-scanning

Preparation

Ensuring the sufficiency of the scan

- The objects must be stationary.
- The object surfaces should have geometry or texture features.
- It is not recommended for the object surfaces to be black, transparent, or reflective.
- The objects should be uniformly lit.
- There should be enough space around the objects for scanning.

If the objects do not meet the above requirements, please make the following preparations:

Transparent, glossy, reflective, or dark objects

It is recommended to select Rapid + Laser mode and adjust the brightness accordingly. If the model data quality is poor, you can use washable or vanishing scanning spray.

Thin, flat, or objects with repetitive features

It is recommended to select Rapid + Laser mode or HD mode, and attach markers. After attaching the markers, it becomes easier to identify different regions, enabling faster scanning of larger areas and accurate surface recognition.

For sticking markers

- Markers should be attached randomly but spaced evenly.
- Markers required in the common area are not less than 4.
- Ensure the camera can capture at least 4 markers within normal scanning range.
- At the edge of the model or a small area, attach markers.
- Do not attach markers on a highly curved surface.
- Do not use broken or incomplete markers.
- Do not use greasy, dusty, or dirty markers.

Create a Project File

Before scanning, you need to create or open a project.

On the screen, tap to create a project file. By default, the file name is Project 1. Then, select the scan mode and point distance to prepare for scanning. For more details, refer to Scan Mode.

Note

- When creating a project file, a project group is automatically created, which includes the created project file.
- Multiple project files can be created within a project group, and the project group name can be modified.

Project Group	Scenario	Application
One object with one project file in the project group	One alignment mode	Suitable for scanning small objects.
One object with multiple project files in the project group	One alignment mode	Suitable for scanning the object that select same scan mode.
One object with multiple project files in the project group	Multiple alignment mode	Suitable for scanning large objects where different regions require different scan mode and align mode.

Related Operations

Rename Project Group

On the right side of the project group name, tap to rename the project group.

Delete Project Group

On the screen, tap **Select** in lower-right corner to enter the project group editing page. You can delete selected or all project groups.

Exporting to USB Flash Drive

On the screen, tap **Select** in lower-right corner to enter project group editing page. Tap to export the project to the USB flash drive.

Note

- The project file can only be exported after inserting the USB flash drive into the scanner.
- If the transmission of the project file is interrupted, the already transferred data will not be cleared, and you can continue to complete the remaining project files that have not been transferred.

Scan Mode

Rapid + IR Mode

- **Characteristics**: Infrared speckle, supports texture, point distance range 0 .5 mm ~ 10.0 mm.
- **Scenarios**: Scanning of large objects with texture features; supports outdoor scanning.
- **Application**:
  - Murals, sculpture, ancient architecture, and other large-scale art and cultural artifacts.
  - Architecture and quality control in manufacturing.
  - Crime scene documentation and other evidence collection and digitization.
- **Align**: Markers, Features, Texture, Global Markers and hybrid alignment.

> **Note**
>
> - Texture is applied by default.
> - Only in the rapid modes, the option to enable the **Range Indicator Box** is available. When the **Range Indicator Box** is enabled, the scanning process will project the scanning range and the scanning center point onto the object.

Rapid + Laser Mode

- **Characteristics**: Infrared laser, point distance range 0 .5mm ~ 10.0 mm. Rapid laser scanning, suitable for a wide range of materials.
- **Scenarios**: It offers high resolution to reliably scan complex objects with various surface types.
- **Application**:
  - Rapid model data acquisition for large-scale industrial applications such as automotive, aerospace, and maritime industries.
  - Aerospace, industrial design, reverse engineering.
- **Align**: Markers and Global Markers.

> **Note**
>
> Only in the rapid modes, the option to enable the Range Indicator Box is available. When the Range Indicator Box is enabled, the scanning process will project the scanning range and the scanning center point onto the object.

HD Mode

- **Characteristics**: Blue lasers, point distance range 0.05 mm ~ 3.0 mm. This improves scanning speed while also enhancing the accuracy of the scanned data.

- **Scenarios**: Mainly used for scanning small objects. It has high material adaptability and does not require adhesive markers.

- **Application**:
  - Quality inspection such as part detection, plastic molding, additive manufacturing.
  - Aerospace, industrial design, reverse engineering.
- **Align**: Markers, Features and Global Markers.

Scan Interface

After creating a new project, tap the **Start** icon in the lower-right corner of the screen to enter the scan interface.

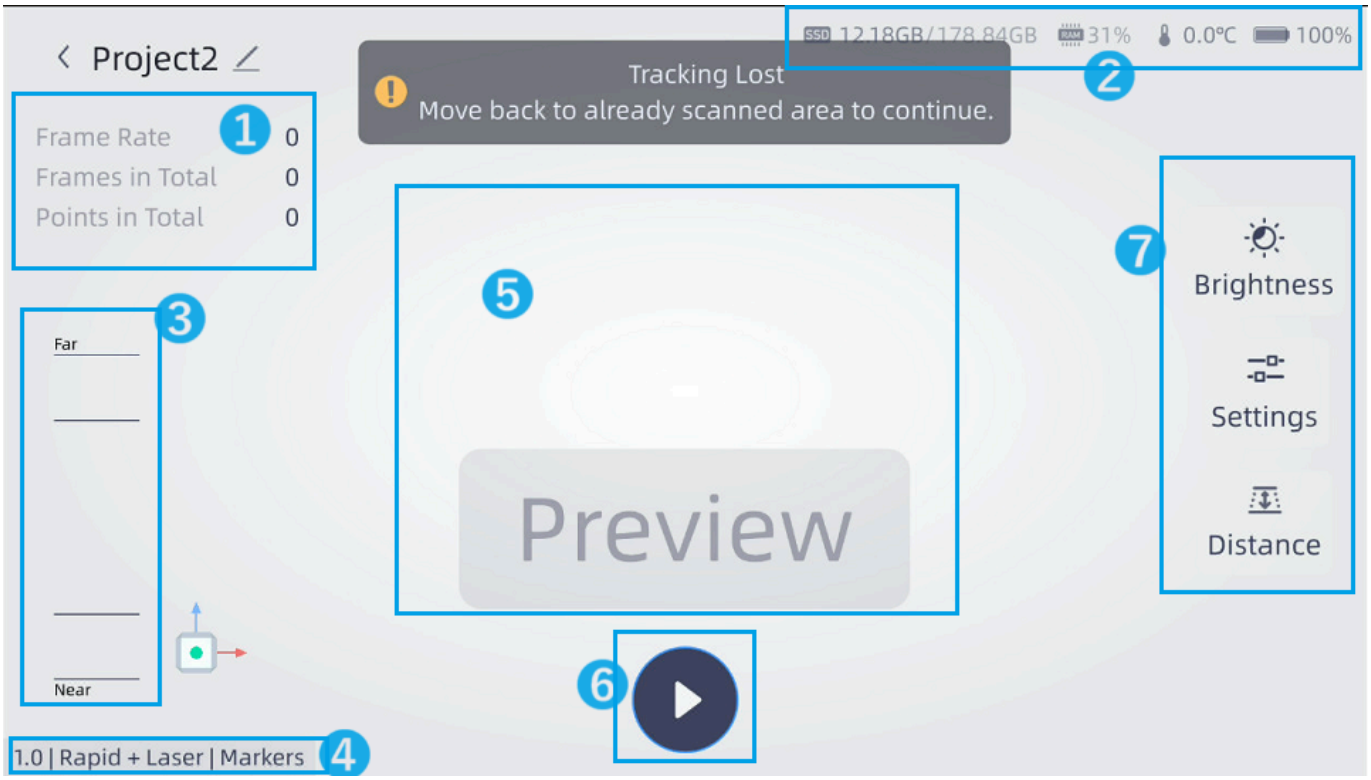

Number	Section	Description
1	Frame Rate/Frame Count/Point Cloud Count	Displays scan frame rate and total point cloud in real-time.
2	Status Bar	Displays current device information such as network, temperature, and battery remaining. For more details, please refer to the icon description.
3	Distance Indicator	When displayed in green, it indicates an appropriate distance; red indicates the distance is too close; blue indicates the distance is too far.
4	Scan Mode	Displays the current scan mode and alignment for the project file.
5	Preview	Displays the scanned model in the preview area.
6	/ /	Switches between three scan states. The basic sequence is: **Preview** > **Scan** > **Pause**.
7	Scan Parameters	For more details, please refer to the scan parameter settings.

Scanning

Preview

During the preview, you can check the quality of the scanning data and adjust parameters based on the displayed results.

Tap to start preview.

> **Note**
>
> To preview the scanning effect but not save the scanned data. You can modify the scan parameters according to the preview.

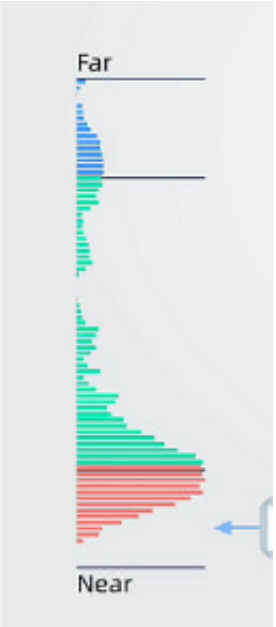

Indicate working distance between the scanner and the object.

- **Green**: Proper
- **Orange**: Too close and the screen border is also displayed in orange color.
- **Blue**: Too far and the scren border is also displayed in blue color.

Distance: Adjust the distance between the scanner and the object being scanned.

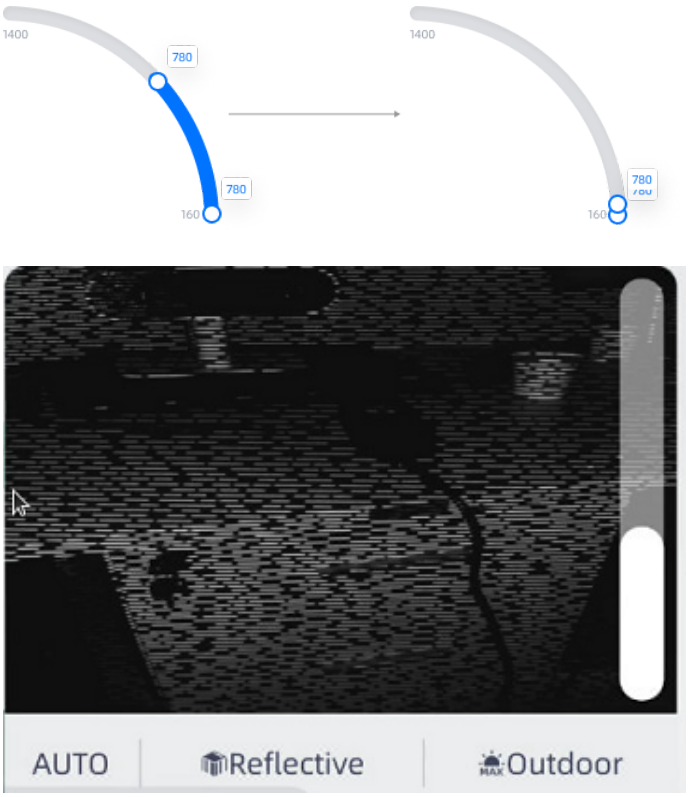

- **Brightness**: To achieve optimal scanning results, adjust the brightness through the camera or preview window, focusing on areas of the object that have rich textures or distinctive features. If the object is clearly visible in the camera window, the brightness is suitable.
- Based on the scanning scene and the material of the object being scanned, you can choose to enable the **outdoor** or **reflective** mode.
- Supports **Auto exposure**, enabling automatic adjustment of the image capture effect.

Scan Settings

Before, during, and after scanning, you can set different parameters. For detailed information, please refer to scanning workflow.

Settings

Data Quality Indicator

To indicate the data quality of your scan, help you to get better scan data. Only available before generating point cloud.

Range Indicator Box

When enabled, a green rectangular box will be projected onto the scanned object during the scanning process to determine the scanning range and target. The function is enabled by default.

Texture

When texture is enabled, each captured point cloud carries corresponding color information, adding texture to the model.

> **Note**
>
> When you choose the texture as the alignment mode, you can enable texture.

Plane Detection

Plane detection can reduce the misalignment rate of data. When you choose either **Feature Alignment** or **Hybrid Alignment**, the **Plane Detection** option is enabled by default and displayed on the screen.

> **Caution**
>
> It is not recommended to enable this feature when scanning objects with few texture features to avoid compromising scanning quality.

Brightness

Drag the slider to adjust the brightness for different material or color of the object to get better scanning data. Please ensure that the object is clearly visible within the camera window and that there is no excessive red color displayed on the object.

Note

If the object surface is dark or reflective, increasing the scanning brightness is recommended.

Adjust the brightness for different material / color of the object to get better scan data.

Distance

Adjust the distance between the scanner and the object being scanned.

Resolution

Adjusting Resolution

Tap 1.0 to open the settings window.

1. You can tap ①/③/⑤ to switch the distance.
2. Tap the screen and slide the arc ruler to adjust the distance.

Note

- If you modify the distance of a project file in a project group, all project files within the same scanning mode (Rapid/HD mode) of the project group will have their distance adjusted accordingly.
- If you decrease the distance, please ensure that the available memory space is greater than 15 GB.
- During the scanning, you can adjust the distance. However, once the point cloud optimization and mesh generation are completed, you cannot adjust the distance anymore. You can click **Return to Scanning** in the lower-left corner of the screen to reset the distance and perform point cloud optimization again, which will overwrite the previous point cloud data.
- The project file stores the latest scan data, optimized point cloud data, and mesh data.

Cutting Plane

Create cutting plane

Tap to open the create cutting plane window.

1. You can switch **Point Cloud Data** or **Markers**.

> **Note**
>
> 3 markers or more are required to generate the cutting plane.

2. Tap select to enable, and slice model data to select data.
3. Tap **Create** to create the cutting plane.

Start Scanning

The point cloud is a collection of data in a 3D coordinate system (xyz), representing the external surface of an object or environment. Imagine each point as a tiny dot floating in space. You can obtain a large amount of point cloud data by scanning objects using a 3D scanner, which can be used for subsequent model rendering and measurements.

During scanning, it is important to direct the scanner at the object. Follow the software prompts to maintain an appropriate working distance and smoothly cover the entire surface of the scanned object to complete the scan.

Caution

- When selecting the global markers alignment, you can tap the start scan button on the screen or press the scan button on the device to capture the surface marker point data of the object.
- After creating a new project file and selecting the scan mode and alignment, they cannot be changed later.
- The larger scanned data and the lower computer configuration, the longer it will take to generate the point cloud.

Note

- To start scanning and save the scanned data.
- When scanning, make the scanner directly facing the object and keep it at a proper distance.
- When scanning, you can adjust the brightness according to the environment brightness or color of the object.
- You can switch between these three statuses using the button on the scanner or by tapping the icon on the screen. The basic order is as follows: **Preview** > **Scan** > **Pause**.

The Point Cloud Scanning Process

Start Scan

After Previewing, tap the Start Scan icon on the screen or press the scan button on the scanner to begin capturing the point cloud data of the object. Tap the start button again to pause the scan.

Data Editing

When scanning, you can edit or delete data and rescan if needed. For more details, refer to data editing.

Meshing

For more details, refer to data editing.

Import Data

Supports export the data. For more details, refer to Data Transmission. You can select a file format (.stl, .obj, .ply, .3mf, and .asc) to tranfer it to your local PC.

Pause and Resume Scan

While scanning, you may need to pause capturing for various reasons. Press the start/stop button or tap to this end.

Losing and Resuming Tracking

As you move the scanner, it captures a series of frames per second with overlapping areas. Which are used to track the object. If the scanner fails to capture enough overlapping areas, it may lose track of the scanning data.

Tracking lost may happen

- Moving the scanner very fast.
- Scanner's field of view contains insufficient surface area.
- Libre in the lost tracking mode displays message "Tracking Lost, move back to already scanned area to continue".

Resume Scanning

- Realign the scanner to the previously captured area while maintaining the original scanner orientation toward this area.
- Once recognized, the scanning will automatically resume without the need to press the scanning button.

Post-scanning

Gesture Interaction

Gesture interaction enables more natural interaction with virtual content. Users can conveniently operate and enhance their experience.

> ⚠ **Attention**
>
> Gesture interaction is not supported during preview or scanning process.

Operation	Description
Single-finger tap or drag	Select, rotate selected data.
Two-finger drag	Move selected data.
Two-finger pinch	Zoom in or out of the model.

Data Editing

When you pause scanning or generate point cloud, you can edit the scanned data.

Icon	Name	Description
ALL / /	All Data / Frame / Point Cloud	Switch between all data, frame, and point cloud data for easy editing of different types of data.
	Invert	Select all the unselected data.
	Unselect	Cancel all selection.
	Undo	Revert the most recent deletion action and restores the last deleted data.
	Undo	Revert to the data before the last edit.
	Delete	Delete the selected data.

Caution

- Deleting all markers is not supported. You must keep at least 4 markers.
- Tap to clear all data, and you will need to scan again.

Meshing

Meshing is to convert the point cloud into a triangular mesh surface. The data after mesh can be directly used for rendering, measurement or printing.

Note

- When the texture is turned off, the default export format is .stl; When the texture is turn on, the default export format is .obj. Multiple formats can be selected simultaneously.
- Files can be renamed on export.

Function	Description
Watertight	• **Unwatertight**: Unclosed model stays the way it is scanned. Processing time is quicker than Watertight. • **Watertight**: All holes will be filled automatically. The data can directly be 3D printed. ⚠**Caution** • Only in watertight mesh can set model quality. • The "Enclosed" mode automatically generates missing data on the model surface to create a geometrically enclosed 3D model. • Half watertight mesh: Holes with a diameter less than or equal to the resolution x 5 will be filled.
Optimization	• **None**: No optimization. • **Standard**: Optimizes data slightly and preserves data characteristics. • **Medium**: Reduce the noise on the surface of the scan data. • **High**: Reduce the noise on the surface of the scan data and sharpen it powerfully. ⚠**Caution** When the optimization option is set to "High", some details in the data may be lost.
Smooth	Smooth the possible noise on the surface of the scan data.
Remove Small Floating Parts	Remove small floating parts on the model. Delete any small face data that is not connected to the main data. The higher the value, the more isolated faces will be removed. Tap the screen lightly and move the slider to adjust the value for removing isolated faces. ⚠**Caution** A value of 0 indicates that isolated faces will not be removed.
Max Triangles	Set max plate number to get mesh model's triangle plate number is within configured plate number. Once enabled, it will limit the maximum number of face data. Tap the screen lightly and move the slider to adjust the value for removing isolated faces. ⚠**Caution** Please set a reasonable value for the maximum number of faces to avoid excessive simplification that may result in a decrease in data quality.
Fill Small Hole	Auto fill the small hole with a perimeter less than or equal to 10 mm (by default). You can set the hole-filling perimeter. ⚠**Caution** When the encapsulation mode is set to "Closed", the screen does not display the "Fill Holes" parameter option.
Marker Hole Filling	Fill the surface holes on an object that were not scanned due to being occluded by markers.

Remove Spike	Remove spike-like data on the image edge.
Recommended Parameters	When turning on, it will automatically use the recommended parameters for meshing.

Data Transmission

USB Transfer

Project group can be exported to a USB flash drive.

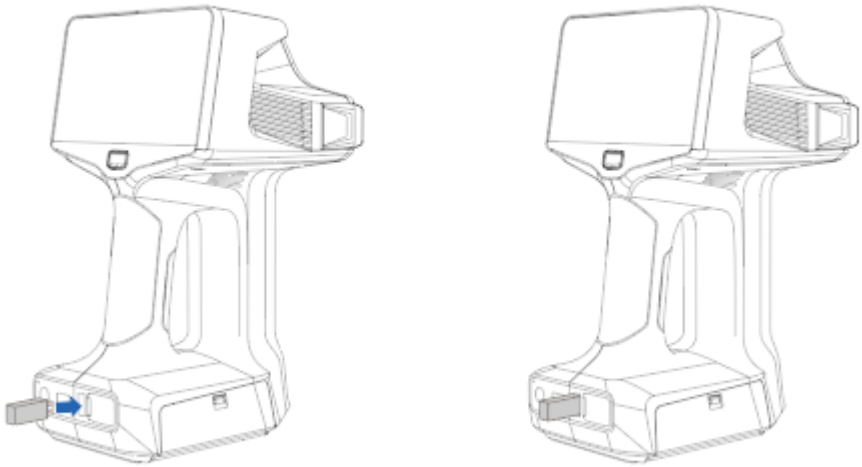

Insert a USB flash drive, and the scanner will recognize it.

Select the project groups, then tap to export them to the USB flash drive.

Note

- The transfer time depends on the size of the project file, so please remain patient.
- Project file transfer can be interrupted at any time.
- Scanning cannot be continued while data transfer is in progress.

Wireless Transfer

Make sure the selected scanner is connected to the same network as the EXScan Libre software, so you can transfer project groups to the scanner via Wi-Fi.

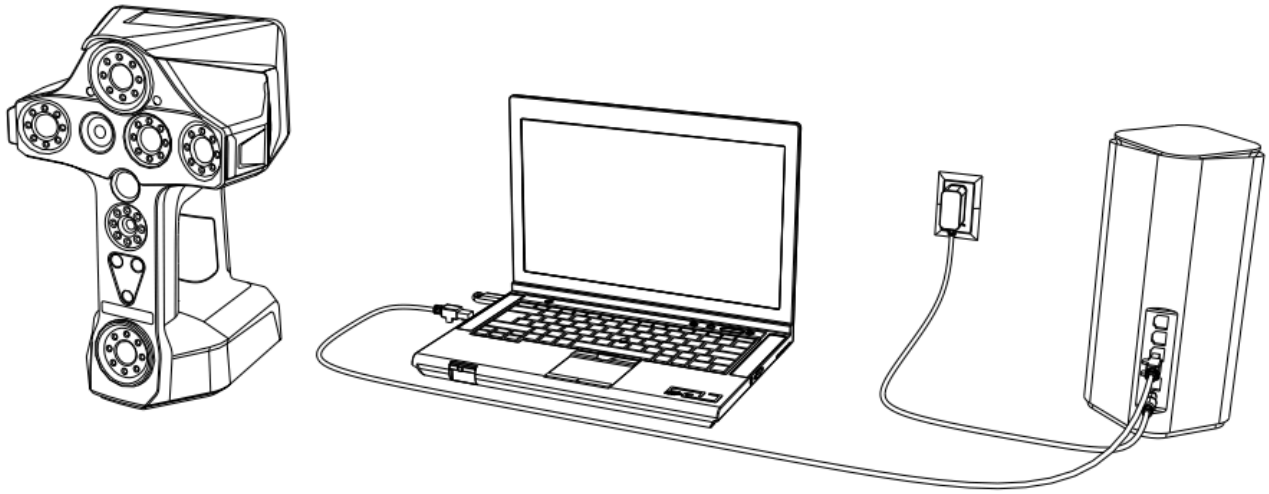

Steps

1. In the EXScan Libre home page, click **Connect Scanner** on the left side to start searching for scanner.

2. Select the scanner and click **Connect**.

Note

When the client sends connection request to the scanner asking for project group information, the scanner responses and allows the client to access the project files stored on it.

3. Once the connection is successful, the software interface will display the list of project group.
4. Check the project groups that need to be imported to the local computer.
5. Click **Import to Local** to start the data transfer.

Device Status

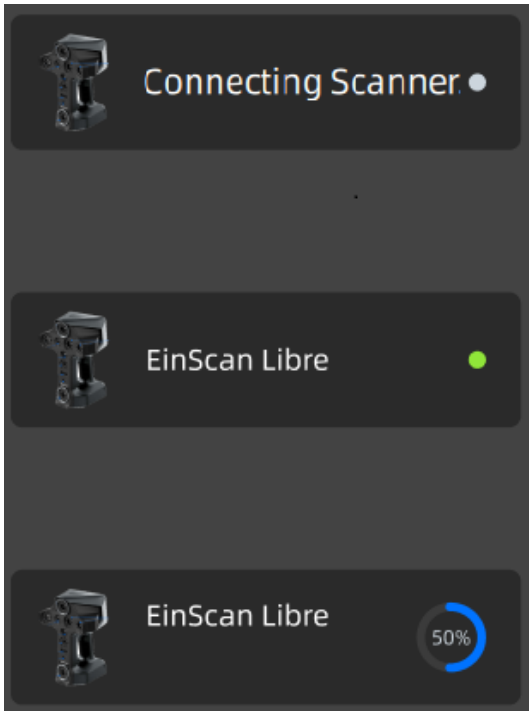

- **Disconnected**: A gray dot on the right side indicates a disconnected scanner.
- **Connected**: A green dot on the right side indicates a connected scanner.
- **Data Transfer**: The transfer progress is displayed on the right side.

Caution

- The selected project group can be transferred up to 30.
- When scaner disconnected, the ongoing transfer of project files will be automatically canceled.
- Scanning cannot be continued while data transfer is in progress.

Wired Transfer

As shown in the figure, connect the scanner to the computer via an cable, and then the EXScan Libre client will automatically retrieve the scanner's project group files.

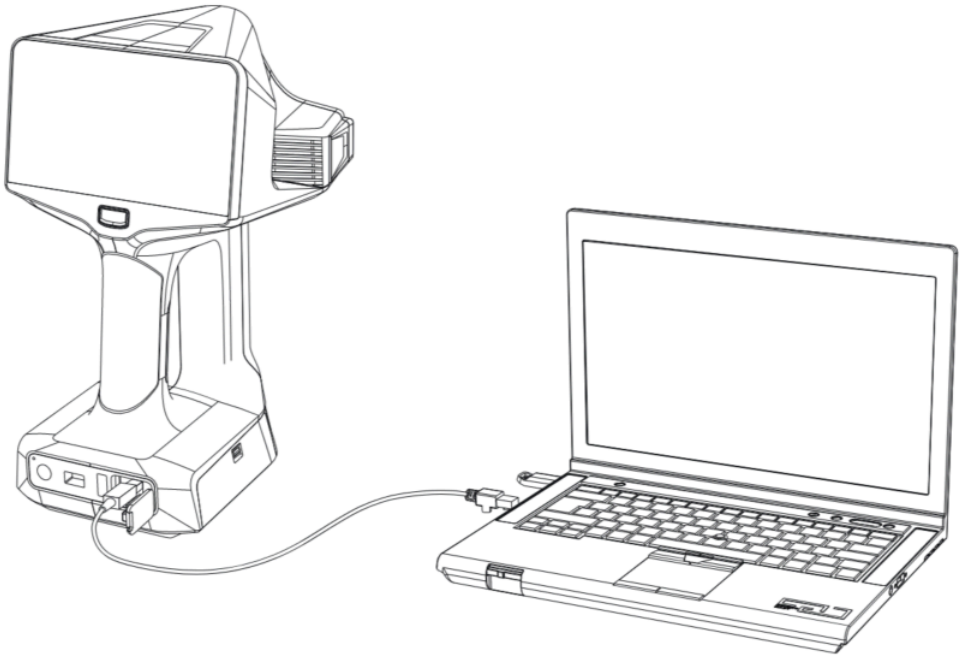

Steps

1. Open the client software, and the interface will display a list of project groups from the connected device.

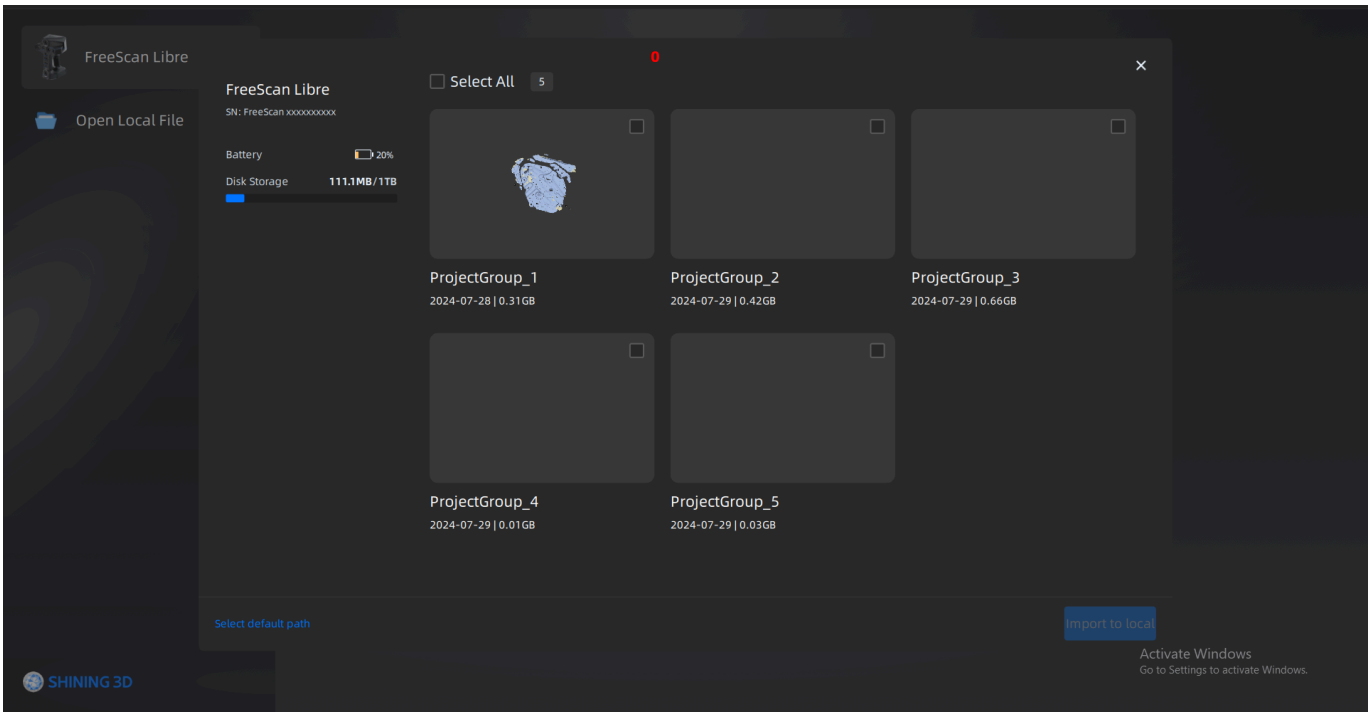

2. Check the project groups that need to be imported to the local computer.

3. Click **Import to Local** to start the data transfer.

Scanner Status Information

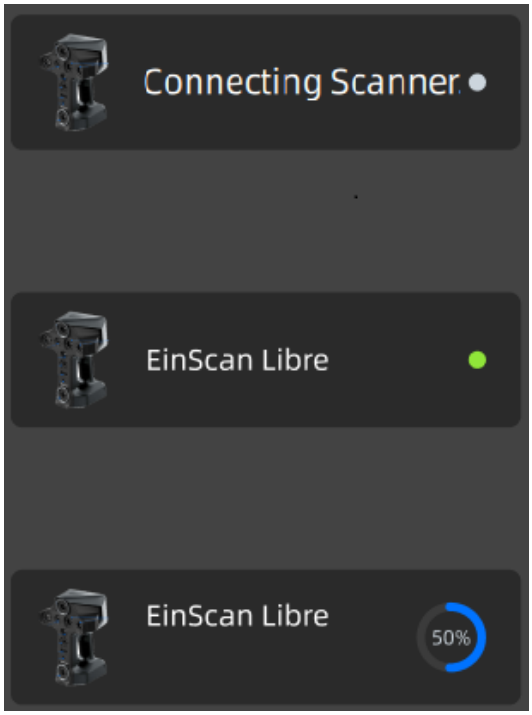

- **Disconnected**: A gray dot on the right side indicates a disconnected scanner.

- **Connected**: A green dot on the right side indicates a connected scanner.

- **Data Transfer**: The transfer progress is displayed on the right side.

Caution

- The number of selected project group can be transferred up to 30.
- When scanner disconnected, the ongoing transfer of project files will be automatically canceled.
- Scanning cannot be continued while data transfer is in progress.

Calibration

Calibration Notices

Through calibration, all the parameters are recalculated to ensure the accuracy of the device and the quality of scan data.

Caution

Use the calibration board supplied with the scanner. A mismatched calibration board will lead to scanned data generation failure or a low accuracy.

- Always make sure that both sides of the calibration board are clean and free of scratches.
- Do not place heavy objects or sundries on the calibration board.
- Keep the calibration board away from corrosives, metals and sharp objects to avoid corrosion or damage.
- It is better not to wipe the calibration board. Do not wipe it with any chemical liquid. If need be, gently wipe it with a clean wet cloth.
- After using the calibration board, put it in the flannel bag.

Note

Calibration is required when:

- The scanner is used for the first time.
- The scanner is severely shaken or jolted, for example, during transport.
- The accuracy drops during scanning, such as frequent alignment failures or frequent indications of tracking lost.
- The scanned data is incomplete or its quality drops.
- The scanner has not been calibrated for more than 14 days. In this situation, the software will prompt you to calibrate the scanner.
- During the calibration process, please ensure that there are not a large number of markers around the calibration board, so as not to affect the calibration accuracy.

Quick Calibration

Calibration recalculates the scanner parameters, which not only ensures the accuracy of the scanner but also enhances the quality of scanning.

> ⚠ **Caution**
>
> - Do not move the calibration board during the calibration.
> - The scanning distance in **Rapid** scan mode is greater than that in **HD** scan mode. It refers to the distance between the scanner and the object being scanned.

Steps

1. Place the calibration boards and scale bar as shown in the image below.

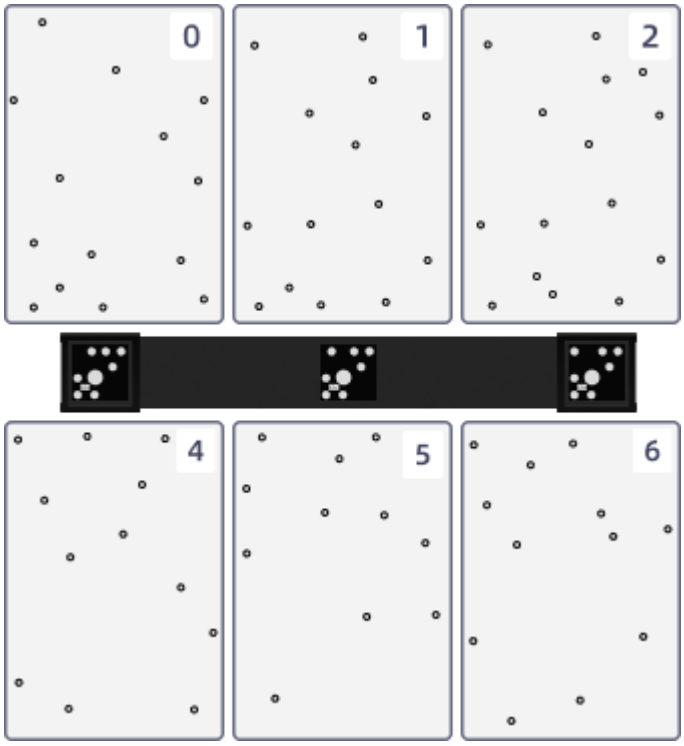

2. Following the on-screen calibration guide, hold the handheld scanner horizontally and aim it towards the center of the scale bar. Slowly raise the scanner.

Caution

According to the guide, ensure that the height, horizontal position, and scan projection range of the scanner align with the illustrated instructions. Once all three position indicators satisfy the prompts, the software will automatically proceed to calibration.

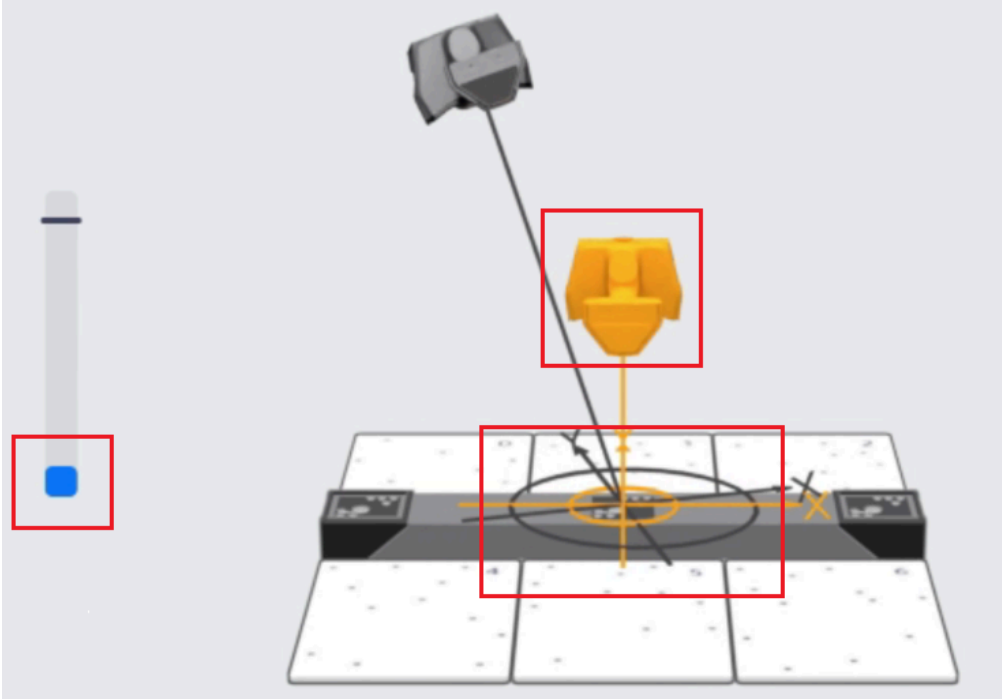

3. Hold still and press on the scanner to start calibration.
4. Move the scanner up and down slowly until all distance indicators turn green.
5. Move the scanner to the right side of the scale bar and switch to each of the four directions (forward, backward, left tilt, right tilt) for calibration.
6. Move the scanner to the left side of the scale bar and switch to each of the four directions (forward, backward, left tilt, right tilt) for calibration.
7. Check the calibration result.

Note

- The tilt angle should be at 25 degree.
- After completing the rapid calibration, click **Next** in the lower-right corner of the screen to proceed to HD Calibration.
- Please calibrate again if the calibration fails.
- Please contact the supplier or technical support if the calibration still fails after several attempts.

White balance

To ensure the accuracy of the texture data, it is better to adjust the white balance whenever there is a change in ambient brightness.

> ⚠ **Caution**
>
> - Do not move the calibration board during the adjustment.
> - To get a better texture, make sure the calibration board is clean.
> - Do not adjust the white balance or scan the object under strong light in order to avoid color cast and other problems.
> - If the texture is unsatisfying, change the ambient brightness and redo the white balance or redo the white balance directly.

Steps

1. Place the calibration boards horizontally with the white side facing up.

2. Pay attention to the screen and direct the camera at the middle of the calibration board.

3. Hold still and press on the scanner to start adjustment.
4. Move the scanner up and down slowly, and the scanner will take a clearest photo automatically to finish the adjustment.

Note

- If the adjustment fails, please try it again.
- If you still fail to calibrate the scanner, please contact your supplier or our support team .

Accessories

Replace Battery

When the scanner's battery is on its way out, it's best to replace it as soon as possible to avoid affecting the battery's life.

> ⚠ **Caution**
>
> - Always follow the correct procedure as defined in the batteries manufacturers handbook.
> - Please do not dismantle the original batteries, and do not use unmatched batteries.
> - Always take great care to avoid shorting the live terminal to earth.
> - Never place tools or metal objects near to or on top of a battery.
> - Always charge in a well ventilated area.
> - Always ensure the charging leads are correctly fitted before switching on the mains.
> - No attempt should ever be made to renovate.

Remove the Battery

Step 1: open the battery lid.

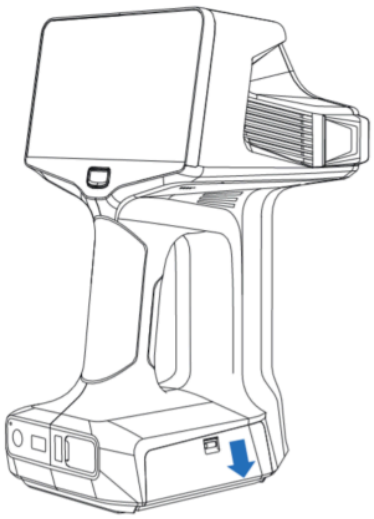

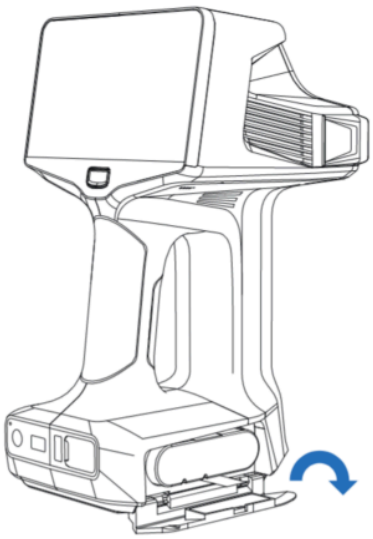

Install the Battery

Step 2: press the latch.

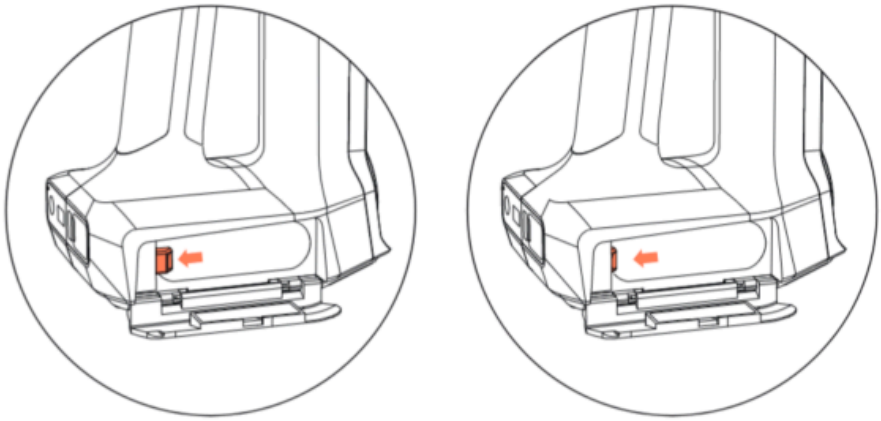

Step 3: pull the battery.

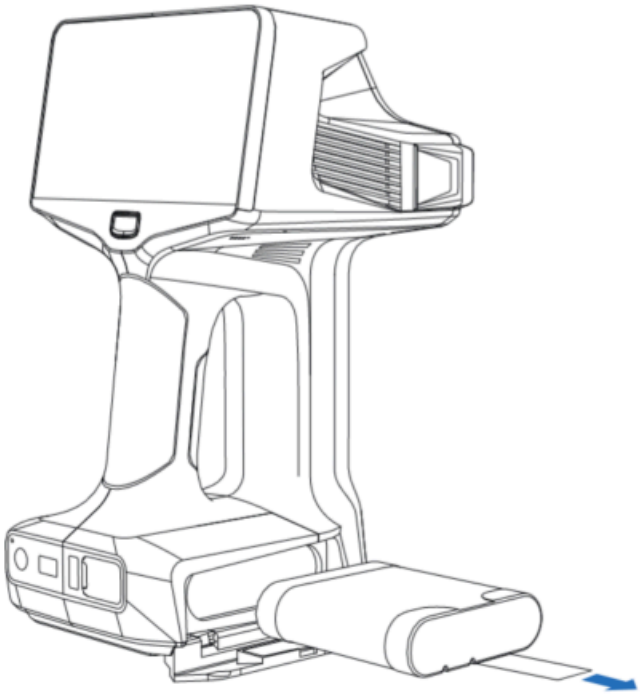

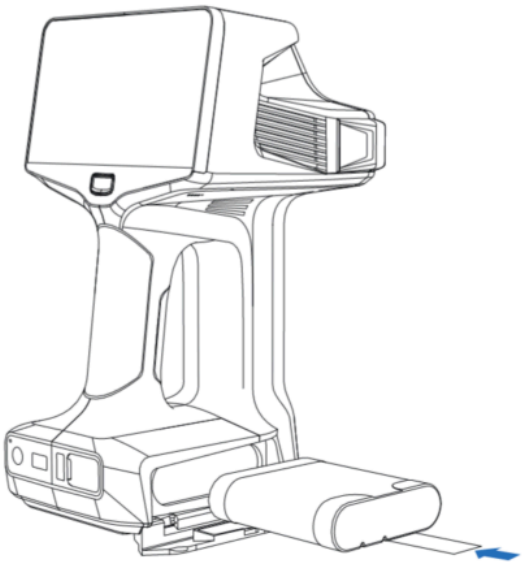

Step 1: insert a charged battery.

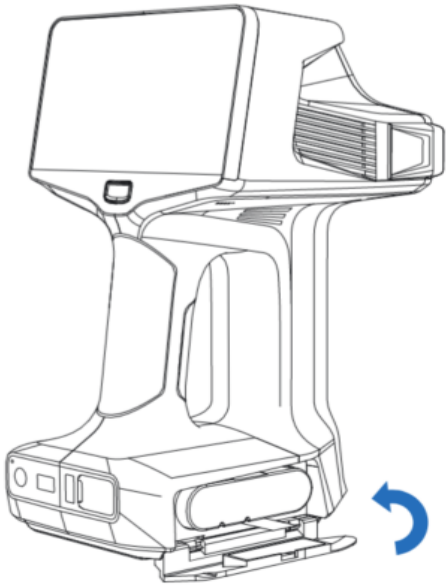

Step 2: close the battery lid.

The scanner comes with one scale bar and six calibration boards. This set of accessories is used for calibrating the scanner's accuracy and improving scanning quality.

Calibration Board and Scale Bar

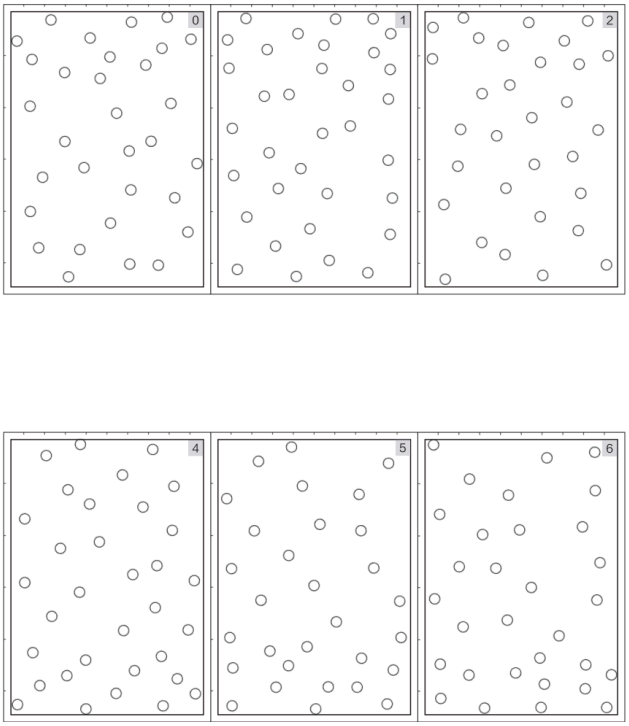

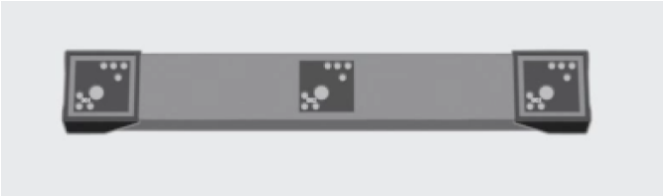

Caution

- After using the calibration board, put it in the flannel bag.
- Make sure that the markers on the calibration board aren't damaged or stained, and that the front side of the calibration board is clean and free of scratches.
- Keep the calibration board away from corrosives, metals and sharp objects to avoid corrosion or damage.
- Do not put heavy objects or sundries on the calibration board.
- Please store the accessories properly for future use.

Safety Information

Welcome

Symbol conventions

Symbol	Meaning
	Note: This symbol is used to inform you of the additional information of the product.
	Caution: This symbol is used to inform you of incorrect operations that may damage the device or result in data loss. Any damages resulting from misuse are not covered by the warranty.
	Warning: This symbol is used to inform you of the potential risks that may result in serious personal injury and other safety incidents.

About the user manual

Thank you for using the products of SHINING 3D TECH CO., LTD. (hereinafter referred to as the "SHINING 3D”). Before you use the products, please carefully read and understand this declaration. Once you use this product, it means that you fully accept this statement and promise to comply with the relevant regulations.

1. The contents of the Product Instruction and User Manual (hereinafter collectively referred to as the "Product Usage Documentation") are critical to your personal safety, legal rights, and liabilities. Before you use the products, Please ensure that you have carefully read the Product Usage Documentation, and use the product correctly in accordance with the requirements of the Product Usage Documentation. We also recommend that the products be operated by trained professional technicians.
2. Please inspect and/or maintain the product before use. If the product is damaged, deformed or in any other abnormal condition, stop using it immediately and contact the after-sales service personnel for maintenance. SHINING 3D will not be responsible for any problems caused by your failure to inspect or maintain the product in a timely manner.
3. SHINING 3D does not guarantee the applicability of the outcomes of your use of the products, and you are responsible for verifying the quality and functionality of the outcomes. You should check and verify thoroughly that any outcomes meet your requirements before using them, for which you bear full responsibility. If any damage arising from using the outcomes of any products, you shall bear the corresponding risk, and SHINING 3D shall not bear any responsibility.
4. SHINING 3D owns complete intellectual property rights for the contents of the for which you bear full responsibility. Without the written consent of SHINING 3D, it is not allowed to copy, transmit, publish, adapt, compile or translate any contents of the Product Usage Documentation in any form for any purpose.
5. The Product Usage Documentation is a guidance for installing, operating, and maintaining the product instead of serving as the quality guaranty for the products. SHINING 3D makes all efforts to ensure the applicability of the Product Usage Documentation, but reserves the right of final interpretation. Images and diagrams in the product documentation are presented to provide convenience to user understanding. In the event that any images or diagrams are inconsistent with the physical products, the later shall prevail. In addition to the mandatory provisions of laws and regulations, the contents of the Product Usage Documentation are subject to changes without further notice.
6. SHINING 3D shall not be held responsible for any damages and/or losses caused by human factors, environmental factors, improper storage and use, or any other factors other than due to the quality of the product. SHINING 3D also shall not be held responsible for any indirect anticipated profit loss, loss of reputation and other indirect economic losses. Except as otherwise expressly provided by laws and regulations, the total liability assumed by SHINING 3D (regardless of cause) shall not exceed the purchase price of the products you paid to SHINING 3D.
7. Disputes arising from this Declaration and the Product Usage Documentation thereof shall be governed by the laws of the People's Republic of China, excluding its conflict of law rules. In the event that certain provisions are in conflict with the applicable law, these provisions will be reinterpreted in full accordance with the law, while other valid provisions will remain in force.
8. All disputes between you and SHINING 3D that arise from, shall first be resolved amicably through negotiation. If a dispute cannot be resolved through friendly negotiation, any party may submit the dispute to the Court of Xiaoshan District, Hangzhou City, Zhejiang Province, People's Republic of China for litigation and settlement.
9. In the event of any questions about the contents of this Declaration and application of Product Usage Documentation, please contact us by the contact information provided in the User Manual. Thank you for your cooperation and support! We hope that our products can bring you a great experience of using.

Laser Information

Class 2 Laser Product

Laser power: <1mW

Complies with FDA performance standards for laser products except for conformance with IEC 60825-1 Ed.3., as described in Laser Notice No.56, dated May 8,2019.

Caution

Use of controls or adjustments or performance of procedures other than those specified herein may result in hazardous radiation exposure.

Labels

Tap Settings > About to enter scanner information page, you can view the FCC IC ID and regulatory information.

Contains FCC ID:2AMG4-EINSTAR3 Contains IC:24652-EINSTAR3

Identification Label	Warning Label & Certification Label	Laser Logotype Label

Logo	Description
CE	LVD/EMC Directive This product complies with the European Low Voltage Directive 2014/35/EU and EMC Directive 2014/30/EU.
	WEEE Directive-2012/19/EU The product this manual refers to is covered by the Waste Electrical&Electronic Equipment(WEEE) Directive and must be disposed of in a responsible manner.

FCC Regulations

This equipment has been tested and found to comply with the limits for a Class A digital device, pursuant to part 15 of the FCC Rules. These limits are designed to provide reasonable protection against harmful interference when the equipment is operated in a commercial environment. This equipment generates, u ses, and can radiate radio frequency energy and, if not installed and used in accordance with the instructi on manual, may cause harmful interference to radio communications. Operation of this equipment in a re sidential area is likely to cause harmful interference in which case the user will be required to correct the i nterference at his own expense.

Changes or modifications to this equipment not expressly approved by the party responsible for compliance could void the user's authority to operate the equipment.

This device complies with Part 15 of the FCC rules. Operation is subject to the following two conditions: (1) this device may not cause harmful interference, and (2) this device must accept any interference received, including interference that may cause undesired operation. Privacy of communications may not be ensured when using this device.

IC Regulations

This device complies with Industry Canada license-exempt RSS standard(s).

Operation is subject to the following two conditions: (1) This device may not cause interference,

and (2) This device must accept any interference, including interference that may cause undesired

operation of the device.

Le present appareil est conforme aux CNR d'Industrie Canada applicables aux appareils radio

exempts de licence. L'exploitation est autorisee aux deux conditions suivantes : (1) L'appareil ne

doit pas produire de brouillage, et (2) L'utilisateur de l'appareil doit accepter tout brouillage

radioelectrique subi, meme si le brouillage est susceptible d'en comprome - re le fonctionnement.

This Class A digital apparatus complies with Canadian ICES-003. CAN ICES (A) / NMB (A)

RESTRICTIONS IN THE 5 GHZ BAND

Within the 5.15 to 5.25 GHz band, UNII devices will be restricted to indoor operations to reduce any potential for harmful interference to co-channel Mobile Satellite System (MSS) operations.

RESTRICTIONS DANS LA BANDE DE 5 GHZ

Dans la bande de 5,15 à 5,25 GHz, les appareils UNII seront restreints aux opérations intérieures pour réduire toute possibilité d'interférence pouvant nuire aux opérations du Système satellite mobile dans le même canal(MSS).

RF Exposure Regulations (FCC IC):

The SAR limit of USA/Canada is 1.6 W/kg averaged over one gram of tissue, this device has also been tested against this SAR limit. The use of belt clips, holsters and similar accessories should not contain metallic components in its assembly. The use of accessories that do not satisfy these requirements may not comply with RF exposure requirements ,and should be avoided.

La limite de das des États-Unis /Canada est de 1,6 W/kg en moyenne sur un gramme de tissu, ce dispositif a également été testé contre ce Limite SAR.L'utilisation de clips de ceinture, de étuis et d' accessoires similaires ne doit pas contenir de composants métalliques dans son assemblage.L' utilisation d'accessoires qui ne satisfont pas à ces exigences peut Ne sont pas conformes aux exigences d'exposition aux RF, et devraient être évités.

Frequency Range (RF)

- Wi-Fi (2.4 GHz):
- 2400-2483.5 MHz (TX/RX);
- 2.4 GHz Wi-Fi: ＜ 20 dBm (eirp)

  Wi-Fi (5 GHz):

  Band 1: 5150-5250 MHz (TX/RX); Band 4: 5725-5850 MHz (TX/RX);

  5GHz Wi-Fi: ＜ 23 dBm (eirp)

EU Statement

This device is restricted to indoor use when operating in the 5150-5250MHz frequency range.

BE	BG	CZ	DK	DE	EE	IE	EL	ES	FR
HR	IT	CY	LV	LT	LU	HU	MT	NL	AT
PL	PT	RO	SI	SK	FI	SE	UK(NI)	TR	NO
CH	IS	LI							

Contact

Email: einscan_support@shining3d.com

Support platform: https://support.einscan.com

Shining 3D Offices
APAC Region & Headquarters
SHINING 3D Tech Co., Ltd.
Hangzhou, China
Phone: +86 571 82999050
Add: No. 1398, Xiangbin Road, Wenyan, Xiaoshan, Hangzhou, Zhejiang, China, 311258

EMEA Region
SHINING 3D Technology GmbH.
Stuttgart, Germany
Phone: +49 711 28444089
Add: Breitwiesenstraße 28, 70565, Stuttgart, Germany

Americas Region
SHINING 3D Technology Inc.
San Leandro, United States
Phone: +1 (888) 597-5655
Add: 2450 Alvarado St #7, San Leandro, CA 94577