Size：90x120mm

USER MANUAL

3 in 1 Magnetic Wireless Charger station

Product Description

This is a 3in1 wireless charging stand built in intelligent and advance chipset. Support charge your mobile phone, smart watch and airpods at the same time. It will bring you excellent and convenient fast wireless charging.

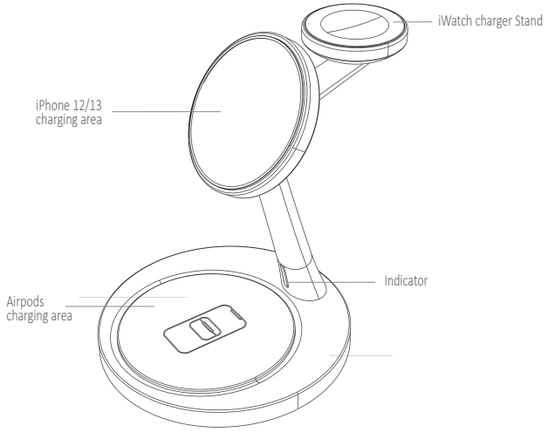

Specification

Model No.:TC046	Input:DC 9V/2A,9V/3A
Output for iPhone:Max.15W	Output for iWatch:Max.3W
Output for Airpods:Max.5W	Charging Standard:qi
Charging Ffficiency:75%~85%	Charging Distance:3~8mm

Support Devices: iPhone 12/13 series, iWatch series,Airpods series

Content:Charger Station x1,Type-C Charging Cable x 1,User Manual x 1

Installation steps

1. Use a min.9V/3A adpter as power suppliy, the red indicator will on.
2. Put your devices on the induction area, blue indicator means it is on charging
3. The indicator will off while your devices had been full charged.
4. If the indicator is flicking,that means the FOD had triggered.

FCC RF Radiation Exposure Statement:
1.This Transmitter must not be co-located or operating in conjunction with any other antenna or transmitter.
2.This equipment complies with RF radiation exposure limits set forth for an uncontrolled environment.
This equipment should be installed and operated with minimum distance 15cm between the radiator and your body.

Safety Instruction

1. Do not squeeze or collied.
2. Do not disassemble or throw into fire or wate,to avoid causing a short circuit leakage.
3. Do not use wireless charger in severely hot,humid or corrosive enviroments to avoid circuit damage and occure leakage phenomenon.
4. Do not use it while the FOD had triggered.
5. Do not place too close with magnetic stripe or chip card(ID card,bank cards,etc.) to avoid magentic failure.

FCC Warning
15.19 Labeling requirements.
This device complies with part 15 of the FCC Rules. Operation is subject to the following two conditions: (1) This device may not cause harmful interference, and (2) this device must accept any interference received, including interference that may cause undesired operation.
15.21 Information to user.
Any Changes or modifications not expressly approved by the party responsible for compliance could void the user's authority to operate the equipment.
15.105 Information to the user.
Note: This equipment has been tested and found to comply with the limits for a Class B digital device, pursuant to part 15 of the FCC Rules. These limits are designed to provide reasonable protection against harmful interference in a residential installation. This equipment generates uses and can radiate radio frequency energy and, if not installed and used in accordance with the instructions, may cause harmful interference to radio communications. However, there is no guarantee that interference will not occur in a particular installation. If this equipment does cause harmful interference to radio or television reception, which can be determined by turning the equipment off and on, the user is encouraged to try to correct the interference by one or more of the following measures:
-Reorient or relocate the receiving antenna.
-Increase the separation between the equipment and receiver.
-Connect the equipment into an outlet on a circuit different from that to which the receiver is connected.
-Consult the dealer or an experienced radio/TV technician for help.

MADE IN CHINA

IC Warning

This device complies with Industry Canada's licence-exempt RSSs. Operation is subject to the following two conditions:
(1)This device may not cause interference;
(2)This device must accept any interference, including interference that may cause undesired operation of the device.

Le présent appareil est conforme aux CNR d'Industrie Canada applicables aux appareils radio exempts de licence.
L'exploitation est autorisée aux deux conditions suivantes:
(1)l'appareil ne doit pas produire de brouillage, et
(2)l'utilisateur de l'appareil doit accepter tout brouillage radioélectrique subi, même si le brouillage est susceptible d'en compromettre le fonctionnement.

The information listed above provides the user with information needed to make him or her aware of a RF exposure, and what to do to assure that this radio operates within the FCC exposure limits of this radio.

The device complies with RF specifications when the device used at 10cm from the body. Third-party belt-clips, holsters, and similar accessories used by this device should not contain any metallic components. Body-worn accessories that do not meet these requirements may not comply with RF exposure requirements and should be avoided. Use only the supplied or an approved antenna.