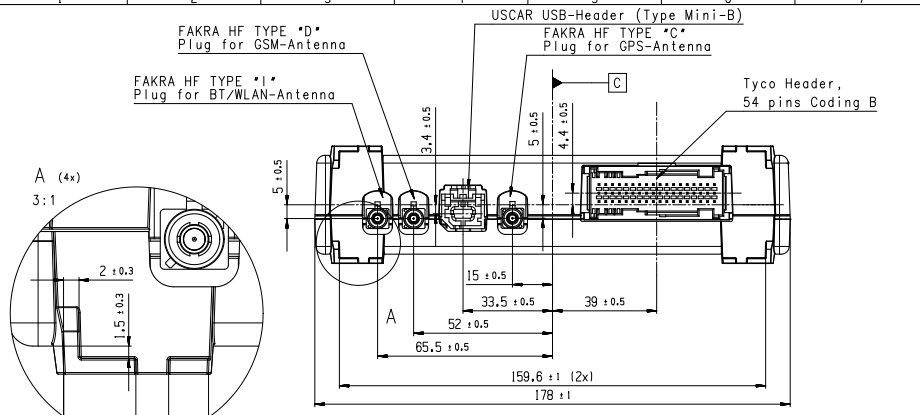


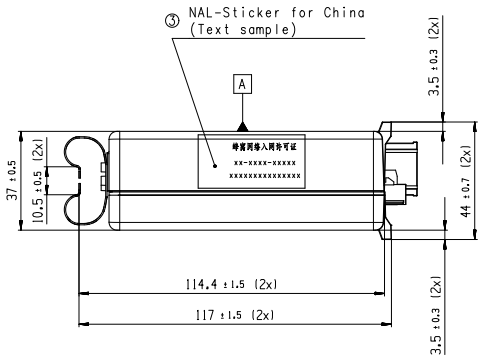


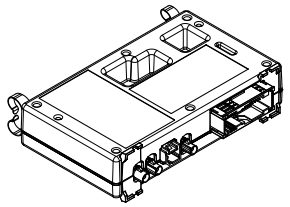

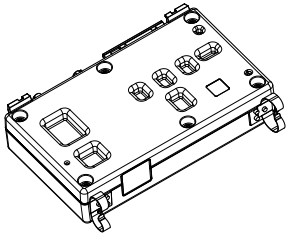

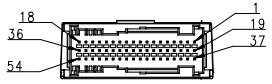


| Receptor Pins | Function |
|---|---|
| 1 | KL.30 (UBAT) |
| 2 | KL.30 (UBAT) |
| 3 | CAN3_GND |
| 4 | CAN3_L |
| 5 | KL.15 (IGNITION) |
| 6 | CAN1_GND |
| 7 | CAN1_GND |
| 8 | DIGITAL_IN4_GND |
| 9 | DIGITAL_IN3 |
| 10 | LINE_OUT_GND |
| 11 | LINE_OUT_RIGHT |
| 12 | RS232_DTE_TXD |
| 13 | RS232_DTE_RXD |
| 14 | RS232_DTE_CTS |
| 15 | RS232_RTS |
| 16 | RS232_CTS |
| 17 | LS_SWITCH_2_GND |
| 18 | LS_SWITCH_2 |
| 19 | KL.31 (GND_Z) |
| 20 | KL.31 (GND_Z) |
| 21 | CAN3_H |
| 22 | CAN2_GND |
| 23 | CAN2_GND |
| 24 | CAN1_H |
| 25 | DIGITAL_IN5_GND |
| 26 | DIGITAL_IN3 |
| 27 | DIGITAL_IN2_GND |
| 28 | DIGITAL_IN1 |
| 29 | LINE_OUT_LEFT |
| 30 | VOLTAGE_MEASURE_GND |
| 31 | RS232_DTE_RTS |
| 32 | RS232_DTE_DTR |
| 33 | RS232_RXD_IN |
| 34 | RS232_TXD_OUT |
| 35 | LS_SWITCH_1_GND |
| 36 | LS_SWITCH_1 |
| 37 | KL.31 (GND_Z) |
| 38 | KL.31 (GND_z) |
| 39 | CAN3_GND |
| 40 | CAN2_H |
| 41 | CAN2_L |
| 42 | CAN1_L |
| 43 | DIGITAL_IN5 |
| 44 | DIGITAL_IN3_GND |
| 45 | DIGITAL_IN2 |
| 46 | DIGITAL_IN1_GND |
| 47 | VOLTAGE_MEASURE |
| 48 | RS232_DTE_DSR |
| 49 | RS232_DTE_DCD |
| 50 | RS232_DTE_RI |
| 51 | RS232_DTE_GND |
| 52 | RS232_GND |
| 53 | K_LINE |
| 54 | AUDIO_MUTE |

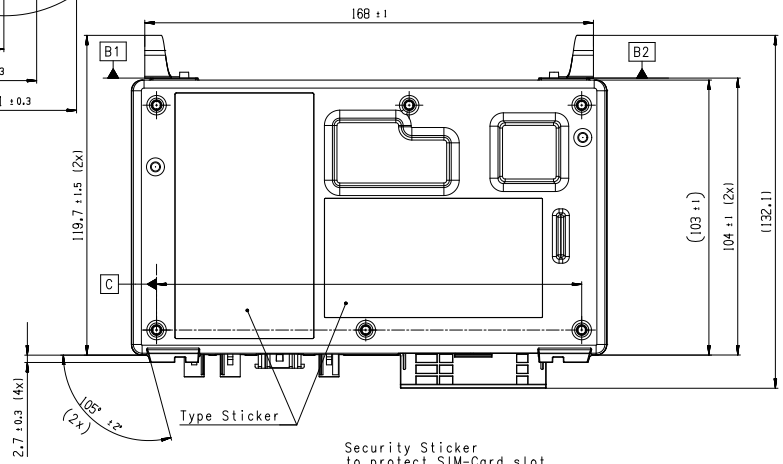


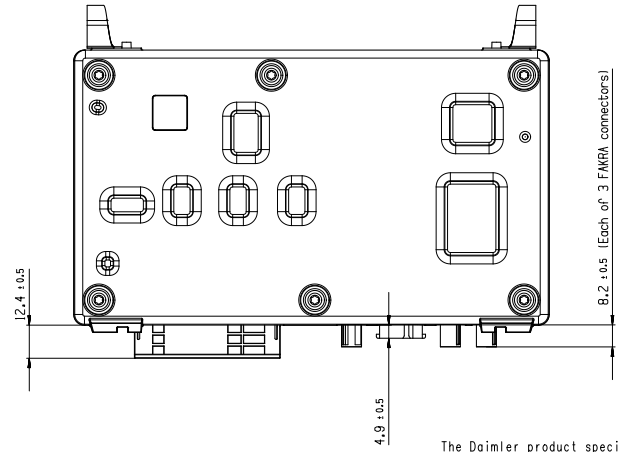


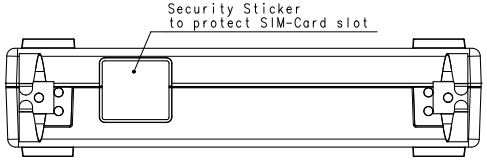


MATERIALS
COVER: GD AlSi9Cu3 DIN 1706 or ADC 12 lead free
BASE PLATE: GD AlSi9Cu3 DIN 1706 or ADC 12 lead free

SPRING: DIN EN 10088 1.4310 (X10CrNi18-8 K1)

SCREW: DIN 10263, 1.5525, Plating: Zn-Ni

CONNECTORS: Main-Connector: Company: Tyco
Housing: PA46-GF30
Contacts: CuFe2P and CuMg0.1 / Plating Sn over Ni
USB-Connector: Company: Molex
Housing SPS, glass filled
Contacts: Copper alloy / Plating: Au over Ni
Shell: Copper alloy / Plating: Tin over Ni
Fakra-Connectors: Company: Rosenberger
Housing: PA 6T/66
Dielectric: PA 6T/66
Center contact: Brass / Plating: AuroDur® gold plated
Outer contact: Zinc alloy / Plating Tin over Ni

The Daimler product specification A 003 009 62 99 for housing size 3 has to be considered.
Spring constant of the retaining spring (based on two springs): 20N/mm± 5 N/mm
1. Spring deflection 3mm ---▷
Spring force based on two springs: 60N ± 15N
2. Spring deflection 5mm ---▷
Spring force based on two springs: 100N ± 25N

Nominal voltage: 12V or 24V
Test voltage: 24V
Operating voltage: 10,8V to 31,2V
Operating temperature: -40°C to 60°C (full operation, see also CTP-4958, CTP-3856)
Operating temperature: 60°C to 75°C (limited operation, CAN alive until components are at max. temp. of 85°C)
Storage temperature: -40°C to 85°C
Type of protection: IP30 in accordance with DIN EN 60529 (applies for the connectors),
IP31 in accordance with DIN EN 60529 (excluded the connectors but with possibly refurbishment for further use)

Weight ca.: 650g

Set shown without package
This drawing gives only the most essential mounting measures.

The given tolerances are for acceptance purposes.
The addition of tolerances given in the part drawings result if applicable in other values.

Type Sticker (2 parts)

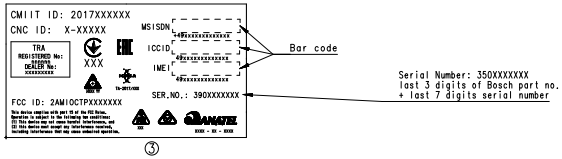


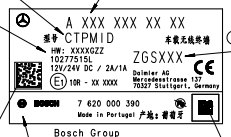


Label according to MBN 10435
Data Matrix Code (DMC) content according to MBN 10495

A The base plane "A" to be determed with 4 points

Size acc. to / Masse nach ISO 14405-1:2010-12
envelope principle/ Huellprinzip Ⓔ

| Ind. | Change/Aend. | | Draw/Gez. | Checked/Gepr. | Release./Freig. | | BWN | Resp. dept./Verantw. Abt. | Add. info./Zus. Info. |
|---|---|---|---|---|---|---|---|---|---|
| 03 | A25245_01 | 20180424 | cpe2hi | Pelz | , | 217 | CM-CII/ENP3 | , | |
| 02 | --- | 20171128 | cpe2hi | Pelz | , | 2170 | CM-CII/ENP3 | , | |
| 01 | --- | 20171124 | cpe2hi | Pelz | , | 2170 | CM-CII/ENP3 | , | |
| 00 | --- | 20171121 | cpe2hi | Pelz | , | 2170 | CM-CII/ENP3 | , | |

YYYYMMDD

Treatment/Behandlung , Missed Details/Fehlende Angaben , Size/Gst. ,
Mat./Stoff , From/Aus ,
Lang./Spr. en/de | Right./Gew. , | Crit. K. , | Scale/Mstab 1:1 | Mat.meets/Stoff/Ve s. N 2560-1 | Sgnt. UG | MNR ,
BOSCH | CONTROL UNIT STEUERGERAET | CTPMID_Tryout 3 | Doc. type TKU | 7 620 000 390 EA | DP/TD 000 | Ind. 03 | Format A1 | Sheet/Bl. 1 / 1
Repl. for , Repl. by ,

©Robert Bosch GmbH, all rights reserved, also regarding patent and industrial property rights.
Weitergabe sowie Vervielfältigung dieser Unterlage, auch auszugsweise, als auch in Form von Schutzrechtsanmeldungen, Bestellungen sowie Nutzung und Mitteilung ihres Inhalts gestattet nur bei ausdrücklicher Zustimmung.

©Robert Bosch GmbH, all rights reserved, also regarding patent and industrial property rights.
Distribution and copying of this document, as well as use and communication of its contents not permitted without our express consent.
Bestellungen sowie Nutzung und Mitteilung ihres Inhalts gestattet nur bei ausdrücklicher Zustimmung.
Weitergabe sowie Vervielfältigung dieser Unterlage, auch auszugsweise, als auch in Form von Schutzrechtsanmeldungen, Bestellungen sowie Nutzung und Mitteilung ihres Inhalts gestattet nur bei ausdrücklicher Zustimmung.

CI/NEW 104.2006 A1