MVOICE 8010 EX-B
USB/Bluetooth Conference Speakerphone

Meeteasy

Thank You

Thank you for choosing the Meeteasy MVOICE 8010 EX-B conference speakerphone. In this User Guide, you will find everything you need to quickly set up, use and manage your new conference speakerphone.

Overview

MVOICE 8010 EX-B speakerphone is specially designed for efficient collaboration in large conference rooms, to fulfill the customers' increasing demand for web-conferencing, hands-free calls and teleconferencing. They can be connected to a PC, laptop via USB, or mobile phone via Bluetooth, and also work great with PC-based communication software. With full bandwidth frequency response and advanced audio processing technologies, MVOICE 8010 EX-B speakerphones can handle any audio requirement, whether that is the conference call, or listening to your favorite music.

Highlights and features

- Connect to PC via USB.
- Connect to mobile device via Bluetooth.
- Three built-in 360° coverage microphones.
- Hi-Fi sound quality.
- DSP noise and echo cancellation.
- Ultra-low power consumption.

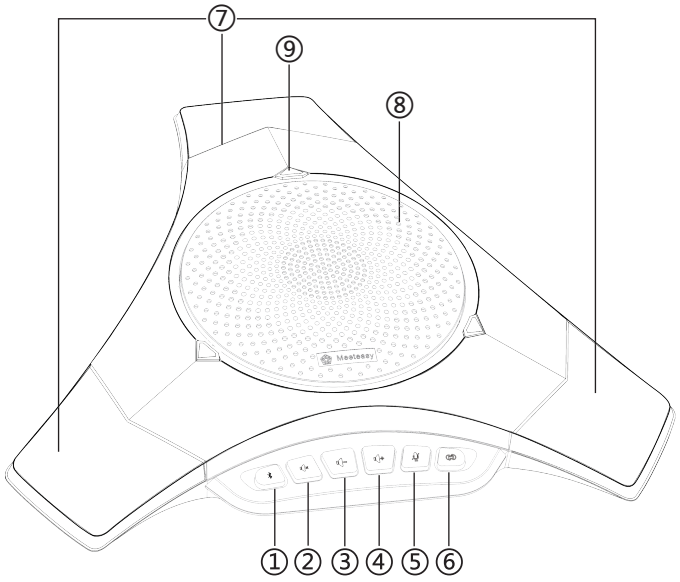

1.Bluetooth
2.Mute speaker
3.Volume down
4.Volume up
5.Mute microphone
6.Battery level / Choose microphone
7.Microphones
8.Speaker
9.Microphone indicators

Connecting to PC or laptop

Plug and play, simply connect your MVOICE to the USB port on your PC or laptop with USB cable. Support Windows XP, Windows Vista, Windows7/8/10 etc.

Attention: the MVOICE works excellently in web-conferencing via Skype or other VoIP software. The PC can automatically recognize the MOVICE device, but you may need to choose MEETEASY USB AUDIO in application software. For example, you would need to choose MEETEASY USB AUDIO in Skype audio setting section.

Connecting to mobile device

Press and hold (2secs) the Bluetooth button until the light flashes blue. Enable Bluetooth on your mobile device, and select "Meeteasy" from the list of available Bluetooth devices. The light turns solid blue when the connection is established.

Turn off the Bluetooth function

Press and hold (2secs) the Bluetooth button and then the Bluetooth function will be closed.

Answer /Reject a call via Bluetooth

Short press to answer the incoming call, long press to reject the incoming call. When in a connected call or dialing, short press this button could hang up the call.

Mute the speakers

Press the button can mute the speaker, the button turns red.

Mute the microphones

Press the button can mute the microphones all, the button turns red.

Increase the volume

Press the button can increase the volume level.

Decrease the volume

Press the button can decrease the volume level.

ON/OFF button

Turn the button to ON side, the MVOICE unit can be powered by built-in battery.
ON/OFF state will not affect the USB charging and USB connection to the PC.

Charging the speakerphone

The speakerphone is equipped with a 2000mAh battery, which would last for over 8 hours of talk time. When the battery indicator turns orange and flashes, less than 10 minutes talk time remain. Plug the MVOICE unit with USB cable to USB port on PC or charging adapter to charge the battery.

Charging safety

Charging starts once the MVOICE unit is connected to PC.

Sound pickup range

In normal room conditions, the reception distance can reach to 5 meters. Built-in three microphones provides with 360-degree coverage. The sound pickup range may differ depending on the operating environment and conditions.

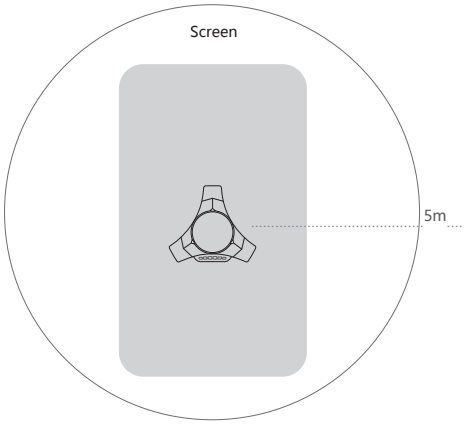

Guide for external microphones

For the model MVOICE 8010 EX-B, two external microphones (EX-MIC) are provided within the package for upgrading to larger conference situation applications.

1) Connect microphone wire to MVOICE 8010 EX-B unit and thread through channels at the unit back side.
2) Position EX-MIC for best voice pick up.

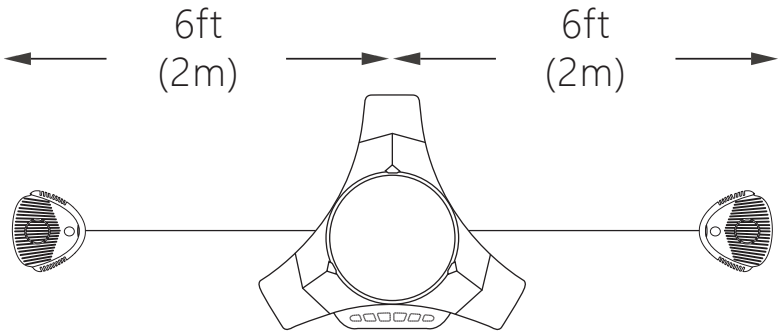

3) Using the external microphones.

A) The EX-MIC is default ON when the MVOICE unit is powered-on.

B) Press the button on the EX-MIC can mute all the microphones, the indicator light turns red.

C) Press the button again on the EX-MIC can resume all the microphones, the indicator light turns green.

Specification:

System requirements	Windows XP/Windows Vista/Windows7/8/10 etc.
Connections	USB version 2.0
Max volume	93dB
Speaker frequency	30-16KHz
Microphone frequency	30-16KHz
Power voltage	5V DC
Power consumption	300mAh max.
Operating temperature	5℃-40℃
Storage temperature	-30℃-55℃
Accessories	6ft USB cable/User Guide/Gift box/*Optional EX-MIC(1pair)
Compliance	RoHS/FCC/CE

Meeteasy Technology Limited
Add:6F Jianda Building,Keyuan Road,Science and Technology Park,Nanshan District,Shenzhen,518053,China
E-mail: info@meeteasy.com.hk
Tel:(+86) 755 8884 1683 Fax:(+86) 755 2690 5650

For more information, please visit
www.meeteasy.com.hk

FCC Warning Statement

Changes or modifications not expressly approved by the party responsible for compliance could void the user's authority to operate the equipment. This equipment has been tested and found to comply with the limits for a Class B digital device, pursuant to Part 15 of the FCC Rules. These limits are designed to provide reasonable protection against harmful interference in a residential installation. This equipment generates uses and can radiate radio frequency energy and, if not installed and used in accordance with the instructions, may cause harmful interference to radio communications. However, there is no guarantee that interference will not occur in a particular installation. If this equipment does cause harmful interference to radio or television reception, which can be determined by turning the equipment off and on, the user is encouraged to try to correct the interference by one or more of the following measures:

- Reorient or relocate the receiving antenna.
- Increase the separation between the equipment and receiver.
- Connect the equipment into an outlet on a circuit different from that to which the receiver is connected.
- Consult the dealer or an experienced radio/TV technician for help.

This device complies with part 15 of the FCC Rules. Operation is subject to the following two conditions: (1) This device may not cause harmful interference, and (2) this device must accept any interference received, including interference that may cause undesired operation.

RF Exposure Statement

To maintain compliance with FCC's RF Exposure guidelines, This equipment should be installed and operated with minimum distance of 20 cm the radiator your body. This device and its antenna(s) must not be co-located or operation in conjunction with any other antenna or transmitter.