# Annex B Test Setup Photos

## EUT Antenna Location

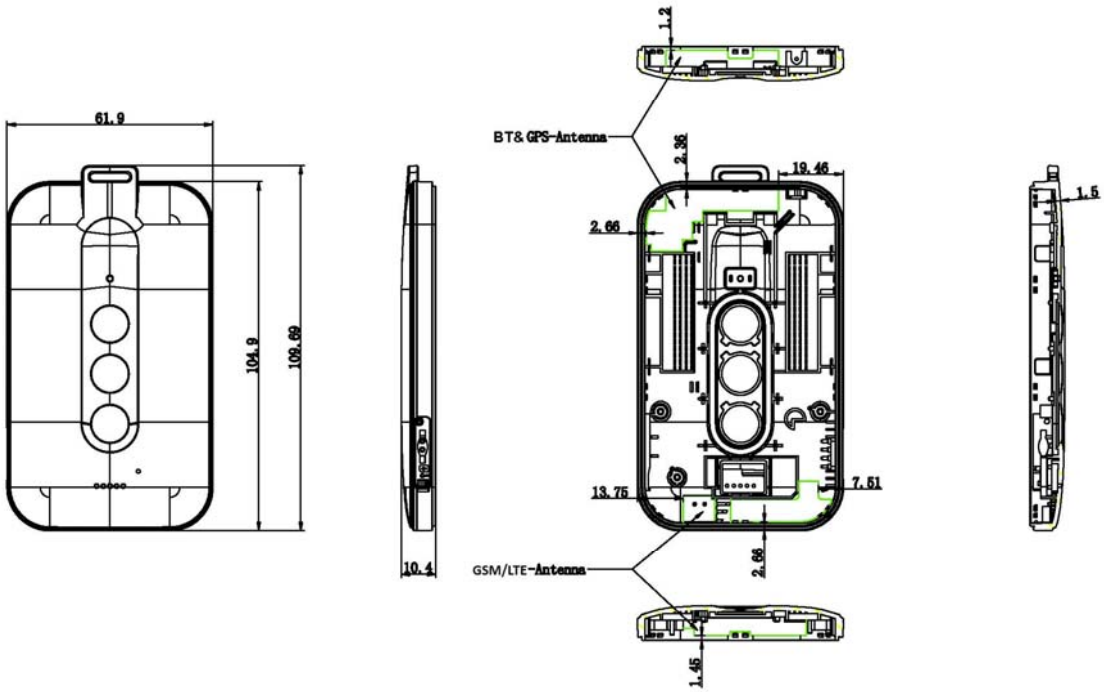

**Body**

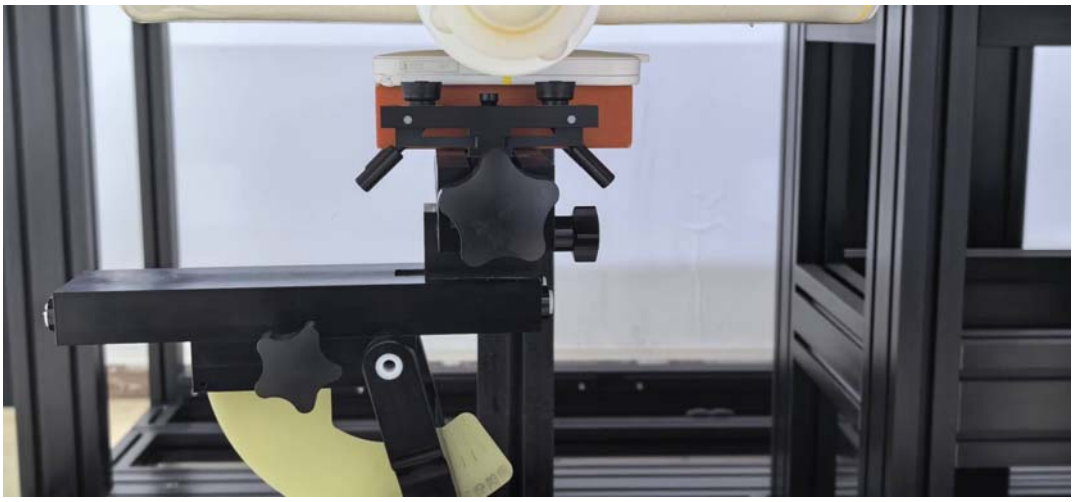

Front Side (Test distance: 10mm)

Back Side (Test distance: 10mm)

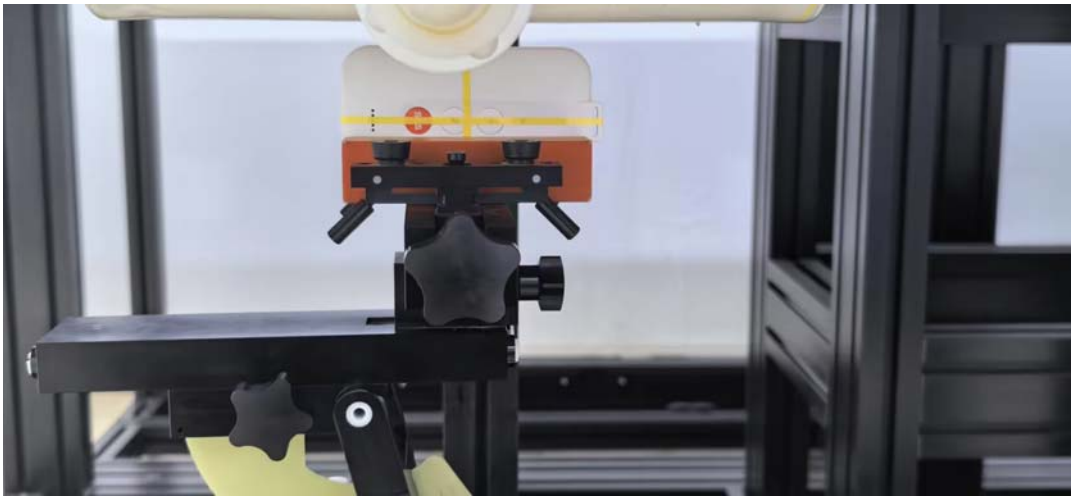

Left Side (Test distance: 10mm)

Right Side (Test distance: 10mm)

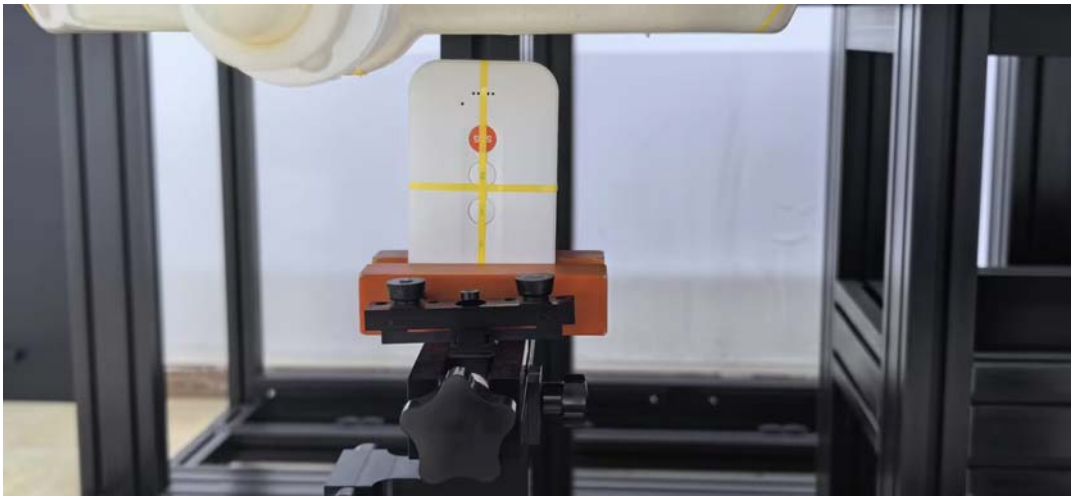

Bottom Side (Test distance: 10mm)