EWN-8822CSE2AA

SPECIFICATION V1.8

IEEE 802.11b/g/n/a/ac SDIO Wireless
+ Bluetooth 2.1/3.0/4.2/5.0 Module

EARDATEK 试用水印

Contents

1 General Specifications ..... - 3 -
2 Features ..... - 3 -
2.1 WLAN ..... - 3 -
2.2 Bluetooth ..... - 4 -
3 System Block Diagram ..... - 4 -
4 PHY Specification ..... - 5 -
4.1 Wi-Fi Specification ..... - 5 -
4.2 BT Specification ..... - 7 -
5 Other Specifications ..... - 8 -
6 DC Characteristics ..... - 9 -
7 S11 Report ..... - 10 -
8 Module configurations ..... - 12 -
9 Pin Definition ..... - 13 -
10 Module Photos ..... - 16 -
11 Key material list ..... - 16 -
12 Package Information ..... - 17 -
13 Reference design ..... - 18 -
13.1 Power supply requirement ..... - 18 -
13.2 System power on sequence ..... - 20 -
13.3 SDIO Interface ..... - 21 -
13.4 RF circuit ..... - 21 -
13.5 Application Circuit for SD_RESET and BT_DIS_N with Platform ..... - 24 -
13.6 Motherboard interference avoidance ..... - 25 -
13.6.1 Interface interference ..... - 25 -
13.6.2 The main chip interferes with DDR ..... - 26 -
13.7 Recommended secondary reflux temperature curve ..... - 27 -
14 Revision History ..... - 28 -

EARDATEK 试用永久

1 General Specifications

The module provides a complete solution for a high-performance integrated wireless and Bluetooth device. It provides SDIO interface for Wi-Fi and HS-UART interface for Bluetooth. The module complies with IEEE 802.11 a/b/g/n/ac 2T2R MIMO standard, and Maximum PHY data rate up to 173.3 Mbps using 20 MHz bandwidth ,400 Mbps using 40 MHz bandwidth, and 866.7 Mbps using 80 MHz bandwidth.

2 Features

2.1 WLAN

- Supports 802.11ac 2x2, Wave-2 compliant with MU-MIMO
- Completes 802.11n MIMO solution for 2.4GHz and 5GHz band
- Maximum PHY data rate up to 173.3Mbps using 20MHz bandwidth, 400Mbps using 40 MHz bandwidth, and 866.7Mbps using 80MHz bandwidth
- Backward compatible with 802.11a/b/g devices while operating at 802.11n data rates
- Backward compatible with 802.11a/n devices while operating at 802.11ac data rates
- Complies with SDIO 1.1/2.0/3.0 for WLAN with clock rate up to 208MHz
- support standard SDIO v3.0 (up to SDR104 mode at 208 MHz) host interfaces
- complies with HS-UART with configurable baud rate for Bluetooth
- IEEE 802.11a/b/g/n/ac compatible WLAN
- IEEE 802.11e QoS Enhancement(WMM)
- IEEE 802.11i (WPA, WPA2). Open, shared key and pair-wise key authentication
- IEEE 802.11h DFS, TPC, Spectrum Measurement
- IEEE 802.11k Radio Resource Measurement
- WAPI (Wireless Authentication Privacy Infrastructure) certified
- Channel management and co-existence
- Wi-Fi Direct supports wireless peer to peer
- CCA on secondary through RTS/CTS handshake
- Supports TCP/UDP/IP checksum offload
- Two Transmit and Two Receive paths
- 5MHz/10MHz/20MHz/40MHz/80MHz bandwidth transmission
- Supports 2.4GHz and 5GHz band channels

EARDATEK 试用水印

- Short Guard Interval(400ns)
- Sounding packet

2.2 Bluetooth

- Compatible with Bluetooth v2.1 and v3.0 Systems
- Supports Bluetooth 4.1 features
- Supports Bluetooth 4.2 LE Secure Connection by upper layer software upgrade
- Support Bluetooth 5.0 and LE 5.0 system (BT5.2 Logo Compliant)
- Supports all packet types in basic rate and enhanced data rate
- Supports pico-nets in a scatter-net
- Supports Secure Simple Pairing
- Bluetooth 4.0 Dual Mode support: Simultaneous LE and BR/EDR

3 System Block Diagram

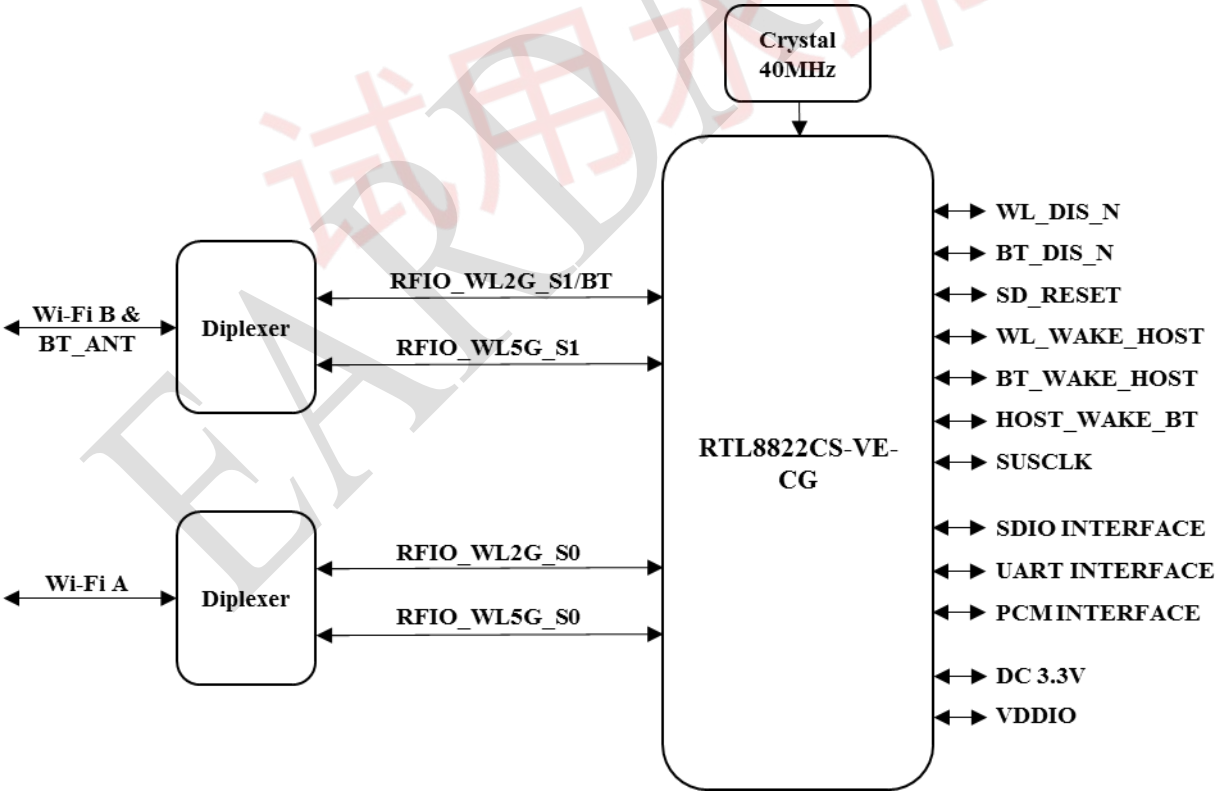

FIG 1 EWN-8822CSE2AA Block Diagram

4 PHY Specification

4.1 Wi-Fi Specification

Table 1 EWN-8822CSE2AA Wi-Fi RF Parameters

Protocol	IEEE 802.11b/g/n/a/ac	
Interface	SDIO 1.1 / 2.0 / 3.0	
Frequency	2.4GHz band CH1~CH11/2400-2483.5MHz	
	5GHz Band CH36~CH48/5150-5250MHz CH52~CH64/5250-5350MHz CH100~CH144/5470-5725MHz CH149~CH165/5725-5850MHz	
	2.4G&5G Band Refer to Channel Plan Domain Code	
Bandwidth	20/40/80 MHz	
PHY Rate	Maximum PHY data rate up to 173.3 Mbps using 20MHz bandwidth;	
	Maximum PHY data rate up to 400 Mbps using 40MHz bandwidth;	
	Maximum PHY data rate up to 866.7 Mbps using 80MHz bandwidth .	
Frequency Error	<±10ppm/802.11b/g/n/a/ac	
Mask	-20dB/±11MHz/OFDM;	
	-28dB/±20MHz/OFDM;	
	-30dB/±11MHz/DSSS, CCK;	
	-50dB/±20MHz/DSSS, CCK.	
2.4G Transmit Power	802.11b (2.4G 11Mbps):	18 ±2dBm
	802.11g (2.4G 54Mbps):	15 ±2dBm
	802.11n (2.4G HT20 MCS7):	14 ±2dBm
	802.11n (2.4G HT40 MCS7):	14 ±2dBm
	Other TX power rate see the “power by rate”	
2.4G EVM	802.11b (2.4G 1Mbps):	≤-13dB
	802.11b (2.4G 11Mbps):	≤-13dB
	802.11g (2.4G 6Mbps):	≤-8dB
	802.11g (2.4G 24Mbps):	≤-19dB
	802.11g (2.4G 54Mbps):	≤-28dB
	802.11n (2.4G HT20 MCS0):	≤-8dB

EARDATEK 试用水印

	802.11n (2.4G HT20 MCS4):	≤-22dB	
	802.11n (2.4G HT20 MCS7):	≤-30dB	
	802.11n (2.4G HT40 MCS0):	≤-8dB	
	802.11n (2.4G HT40 MCS4):	≤-22dB	
	802.11n (2.4G HT40 MCS7):	≤-30dB	
5G Transmit Power	802.11a (5G 54Mbps):	15 ±2dBm	
	802.11n (5G HT20 MCS7):	14 ±2dBm	
	802.11n (5G HT40 MCS7):	14 ±2dBm	
	802.11ac (5G VHT20 MCS8):	13 ±2dBm	
	802.11ac (5G VHT40 MCS9):	12 ±2dBm	
	802.11ac (5G VHT80 MCS9):	12 ±2dBm	
	Other TX power rate see the "power by rate"		
5G EVM	802.11a (5G 6Mbps):	≤-8dB	
	802.11a (5G 24Mbps):	≤-19dB	
	802.11a (5G 54Mbps):	≤-28dB	
	802.11n (5G HT20 MCS0):	≤-8dB	
	802.11n (5G HT20 MCS4):	≤-22dB	
	802.11n (5G HT20 MCS7):	≤-30dB	
	802.11n (5G HT40 MCS0):	≤-8dB	
	802.11n (5G HT40 MCS4):	≤-22dB	
	802.11n (5G HT40 MCS7):	≤-30dB	
	802.11ac (5G VHT20 MCS0):	≤-8dB	
	802.11ac (5G VHT20 MCS5):	≤-25dB	
	802.11ac (5G VHT20 MCS8):	≤-33dB	
	802.11ac (5G VHT40 MCS0):	≤-8dB	
	802.11ac (5G VHT40 MCS5):	≤-25dB	
	802.11ac (5G VHT40 MCS9):	≤-35dB	
	802.11ac (5G VHT80 MCS0):	≤-8dB	
	802.11ac (5G VHT80 MCS5):	≤-25dB	
	802.11ac (5G VHT80 MCS9):	≤-35dB	
2.4G Receive Sensitivity @ PER<10%	802.11b (2.4G 1Mbps):	-91dBm (Max.)	-97dBm (Typ.)
	802.11b (2.4G 11Mbps):	-85dBm (Max.)	-91dBm (Typ.)
	802.11g (2.4G 6Mbps):	-87dBm (Max.)	-96dBm (Typ.)

	802.11g (2.4G 24Mbps):	-79dBm (Max.)	-83dBm (Typ.)
	802.11g (2.4G 54Mbps):	-70dBm (Max.)	-77dBm (Typ.)
	802.11n (2.4G HT20 MCS0):	-87dBm (Max.)	-95dBm (Typ.)
	802.11n (2.4G HT20 MCS4):	-75dBm (Max.)	-80dBm (Typ.)
	802.11n (2.4G HT20 MCS7):	-69dBm (Max.)	-75dBm (Typ.)
	802.11n (2.4G HT40 MCS0):	-84dBm (Max.)	-92dBm (Typ.)
	802.11n (2.4G HT40 MCS4):	-72dBm (Max.)	-76dBm (Typ.)
	802.11n (2.4G HT40 MCS7):	-66dBm (Max.)	-73dBm (Typ.)
5G Receive Sensitivity @ PER<10%	802.11a (5G 6Mbps):	-87dBm (Max.)	-94dBm (Typ.)
	802.11a (5G 24Mbps):	-79dBm (Max.)	-88dBm (Typ.)
	802.11a (5G 54Mbps):	-70dBm (Max.)	-76dBm (Typ.)
	802.11n (5G HT20 MCS0):	-87dBm (Max.)	-93dBm (Typ.)
	802.11n (5G HT20 MCS4):	-75dBm (Max.)	-80dBm (Typ.)
	802.11n (5G HT20 MCS7):	-69dBm (Max.)	-75dBm (Typ.)
	802.11n (5G HT40 MCS0):	-84dBm (Max.)	-92dBm (Typ.)
	802.11n (5G HT40 MCS4):	-72dBm (Max.)	-76dBm (Typ.)
	802.11n (5G HT40 MCS7):	-66dBm (Max.)	-71dBm (Typ.)
	802.11ac (5G VHT20 MCS0):	-87dBm (Max.)	-94dBm (Typ.)
	802.11ac (5G VHT20 MCS5):	-71dBm (Max.)	-76dBm (Typ.)
	802.11ac (5G VHT20 MCS8):	-64dBm (Max.)	-72dBm (Typ.)
	802.11ac (5G VHT40 MCS0):	-84dBm (Max.)	-91dBm (Typ.)
	802.11ac (5G VHT40 MCS5):	-68dBm (Max.)	-72dBm (Typ.)
	802.11ac (5G VHT40 MCS9):	-59dBm (Max.)	-68dBm (Typ.)
	802.11ac (5G VHT80 MCS0):	-81dBm (Max.)	-87dBm (Typ.)
	802.11ac (5G VHT80 MCS5):	-65dBm (Max.)	-70dBm (Typ.)
	802.11ac (5G VHT80 MCS9):	-56dBm (Max.)	-61dBm (Typ.)

4.2 BT Specification

Table 2 EWN-8822CSE2AA Bluetooth RF Parameters

Protocol	BTv2.1+EDR/BTv3.0/BT v4.2/BT v5.0
Interface	UART
Frequency	2400 MHz ~ 2483.5 MHz (79 channels)
Modulation	GFSK, π/4-DQPSK, 8-DPSK

PHY Rate	1Mbps for Basic Rate; 2、3 Mbps for Enhanced Data Rate; 1、2 Mbps for BLE
Transmit Power	6dBm, typical
Receive Sensitivity	<-89dBm @ BER=0.1% for GFSK (1Mbps); <-90dBm @ BER=0.01% for π/4-DQPSK (2Mbps); <-83dBm @ BER=0.01% for 8-DPSK (3Mbps); <-90dBm @ PER=30.8% for BLE
Maximum Input level	GFSK(1Mbps): -20dBm; π/4-DQPSK (2Mbps): -20dBm; 8-DPSK(3Mbps): -20dBm.

5 Other Specifications

Table 3 Other Specifications

Operating Temperature	0℃~+70℃
Storage Temperature	Module: -20℃~+125℃ Package: -20℃~+70℃
Operating Humidity	RH 95%(Non-Condensing)
Storage Humidity	RH 95%(Non-Condensing)
Humidity level	Level 3
Security	WEP 64/128bit,WPA,WPA2,TKIP,AES,WAPI
Other characteristics:	QoS-WMM, WMM-PS
Operation System	Windows XP/Win7/Linux/Android
ESD(IEC61000-4-2)	±1kV(Contact) @ RF Port

EARDATEK 试用水印

6 DC Characteristics

Table 4 Power Supply Characteristics

Symbol	Parameter	Min.	Typical	Max.	Unit
VDD_3.3V	3.3V Supply Voltage	3.0	3.3	3.6	V
IDD_3.3V	3.3V Rating Current	-	-	1.5	A
VDDIO	SDIO I/O Voltage	Depend on the SDIO protocol (1.8V or 3.3V)			

Table 5 3.3V IO Pin DC Characteristics

Symbol	Parameter	Min.	Typical	Max.	Unit
V_{IH}	Input high Voltage	2.0	3.3	3.6	V
V_{IL}	Input low Voltage	-	0	0.9	V
V_{OH}	Output high Voltage	2.97	-	3.3	V
V_{OL}	Output low Voltage	0	-	0.33	V

Table 6 1.8V IO Pin DC Characteristics

Symbol	Parameter	Min.	Typical	Max.	Unit
V_{IH}	Input high Voltage	1.26	1.8	3.6	V
V_{IL}	Input low Voltage	-	0	0.8	V
V_{OH}	Output high Voltage	1.62	-	1.8	V
V_{OL}	Output low Voltage	0	-	0.18	V

EARDATEK 试用水印

7 S11 Report

FIG 2 EWN-8822CSE2AA 2.4G Path A

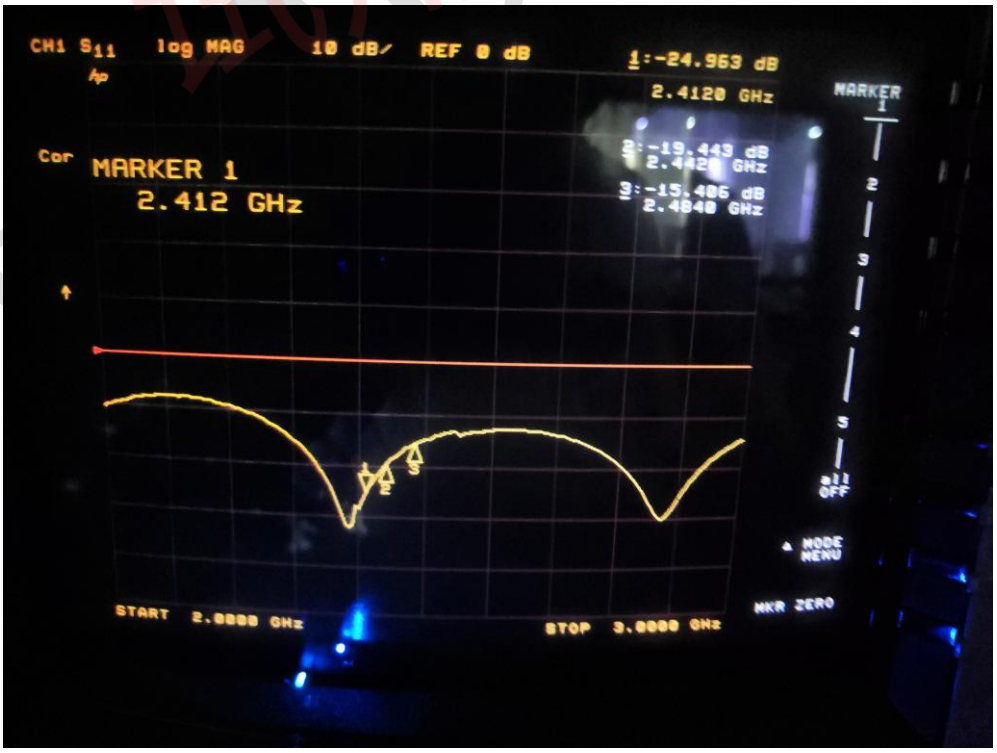

FIG 3 EWN-8822CSE2AA 2.4G Path B

FIG 4 EWN-8822CSE2AA 5G Path A

FIG 5 EWN-8822CSE2AA 5G Path B

8 Module configurations

Module Dimension (L*W*T)： 15.2±0.2mm*13.2±0.2mm*2.1±0.2mm。

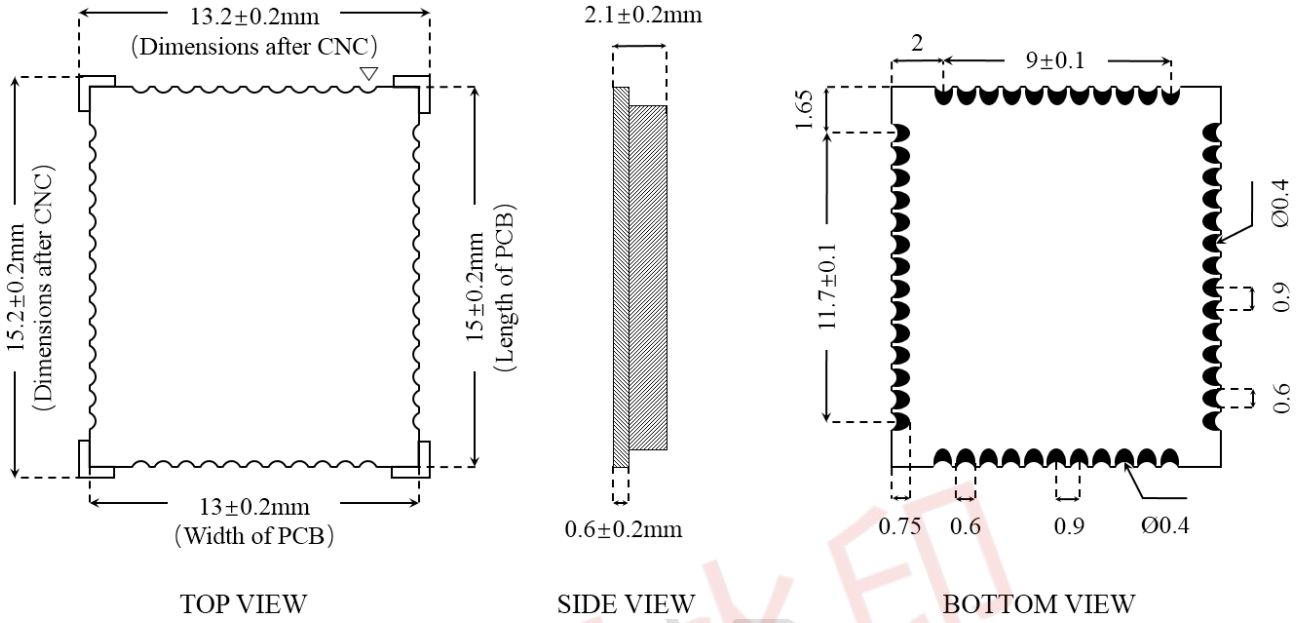

FIG 6 EWN-8822CSE2AA Module Dimension

Recommended Footprint:

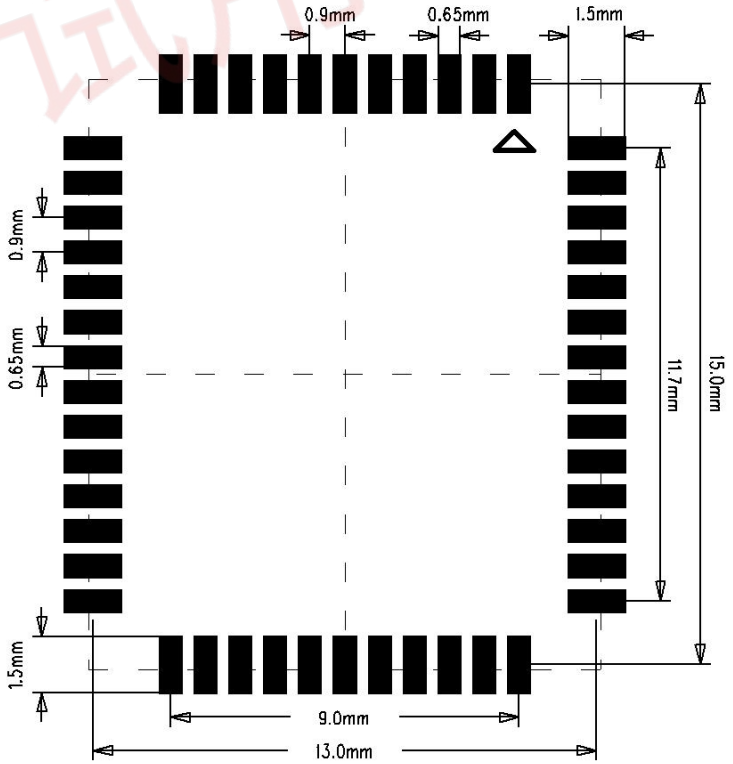

FIG 7 EWN-8822CSE2AA Recommended Footprint

试用水印

9 Pin Definition

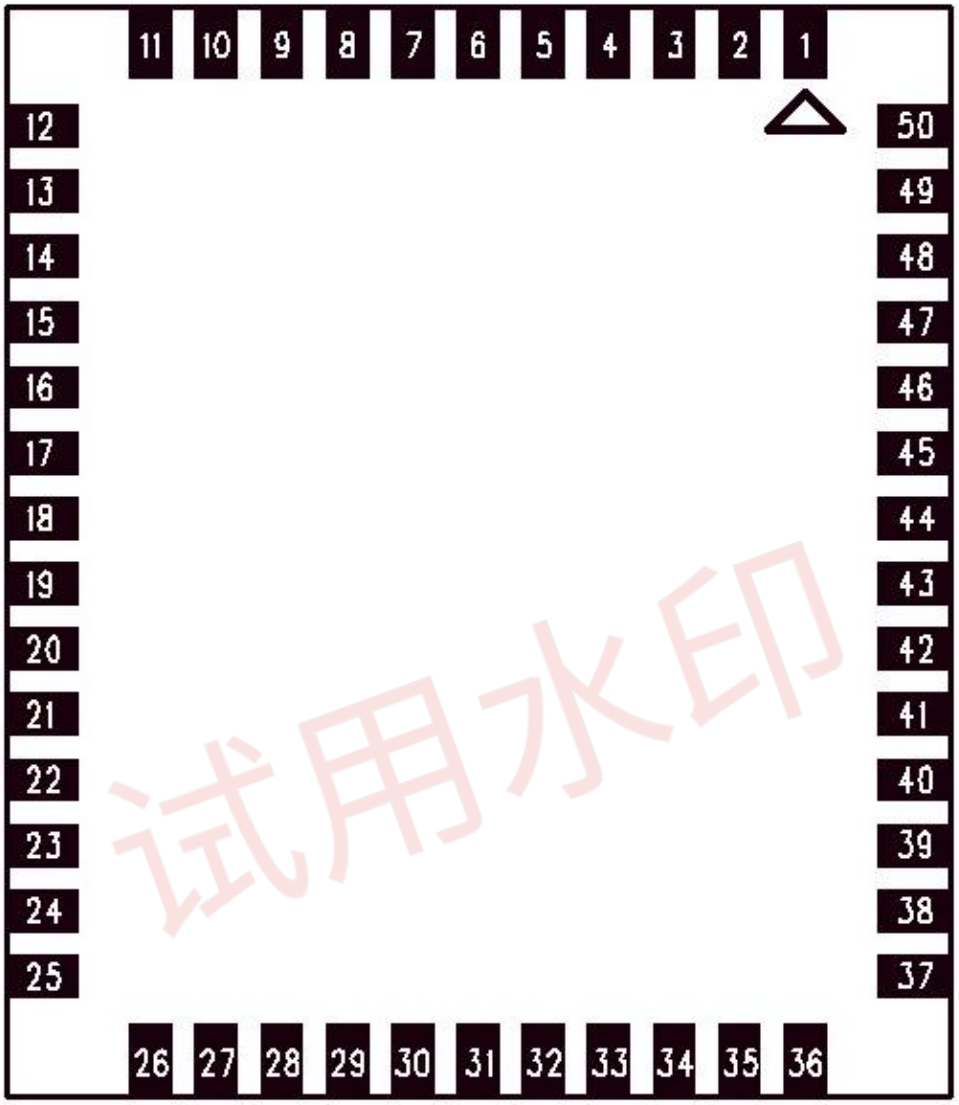

FIG 8 TOP VIEW

See Table 7 for the module hardware pin definition.

Table 7 EWN-8822CSE2AA Pin Description

Pin	Definition	Type	Description	Default Pull	Power level
1	GND	-	Ground	-	-
2	Wi-Fi B & BT_ANT	I/O	Wi-Fi Path B ANT I/O port and Bluetooth ANT I/O port	-	-
3	GND	-	Ground	-	-

Pin	Definition	Type	Description	Default Pull	Power level
4	GND	-	Ground	-	-
5	GND	-	Ground	-	-
6	GND	-	Ground	-	-
7	GND	-	Ground	-	-
8	GND	-	Ground	-	-
9	Wi-Fi A	I/O	Wi-Fi Path A ANT I/O port	-	-
10	GND	-	Ground	-	-
11	GND	-	Ground	-	-
12	NC	-	No connect	-	-
13	GPIO6	I/O	General Purpose Input/Output Pin	Internal PD	VDDIO
14	G_BT	I/O	General Purpose Input/Output Pin	Internal PD	VDDIO
15	WL_DIS_N	I	Reserved	-	VDDIO
16	WL_WAKE_HOST	O	WLAN to wake-up the host	-	VDDIO
17	SDIO _CMD	I/O	SDIO interface command line	Internal PU	VDDIO
18	SDIO _CLK	I/O	SDIO interface clock line	-	VDDIO
19	SDIO _DATA_3	I/O	SDIO interface data line 3	Internal PU	VDDIO
20	SDIO _DATA_2	I/O	SDIO interface data line 2	Internal PU	VDDIO
21	SDIO _DATA_0	I/O	SDIO interface data line 0	Internal PU	VDDIO
22	SDIO _DATA_1	I/O	SDIO interface data line 1	Internal PU	VDDIO
23	GND	-	Ground	-	-
24	WL_WAKE_HOST	O	WLAN to wake-up the host	-	VDDIO
25	GPIO7	I/O	General Purpose Input/Output Pin	-	VDDIO
26	NC	-	No connect	-	-
27	PCM_SYNC	I/O	PCM SYNC signal	-	VDDIO
28	PCM_IN	I	PCM data input	-	VDDIO
29	PCM_OUT	O	PCM data output	-	VDDIO
30	PCM_CLK	I/O	PCM clock	-	VDDIO
31	SUSCLK	I/O	External 32.768KHz low power clock input(Default to using built-in clock)	Internal PD	VDDIO

EARDATEK 试用水印

Pin	Definition	Type	Description	Default Pull	Power level
32	GND	-	Ground	-	-
33	NC	-	No connect	-	-
34	VDDIO	I	I/O voltage supply input (1.8V typ.)	-	VDDIO
35	NC	-	No connect	-	-
36	VDD_3.3V	I	Main power voltage source input (3.3V ±10%)	-	DC 3.3V ±10%
37	NC	-	No connect	-	-
38	BT_DIS_N	I	Enable pin for Bluetooth device ON:pull high;OFF:pull low External pull low to shut down BT	Internal PU	VDDIO
39	GND	-	Ground	-	-
40	UART_TXD	O	Bluetooth UART interface(connect to host UART RX)	-	VDDIO
41	UART_RXD	I	Bluetooth UART interface(connect to host UART TX)	-	VDDIO
42	UART_RTS_N	O	Bluetooth UART interface	-	VDDIO
43	UART_CTS_N	I	Bluetooth UART interface	-	VDDIO
44	SD_RESET	I	Reset pin for SDIO bus External pull low to reset SDIO bus	Internal PU	VDDIO
45	G_WL	I/O	General Purpose Input/Output Pin	Internal PD	VDDIO
46	GND	-	Ground	-	-
47	NC	-	No connect	-	-
48	GND	-	Ground	-	-
49	HOST_WAKE_BT	I	Host wake-up Bluetooth	Internal PD	VDDIO
50	BT_WAKE_HOST	O	Bluetooth to wake-up the host	Output High	VDDIO

Note: The internal pull-up/down resistances of the chip are about 50K~100K ohm.

EARDATEK 试用水印

10 Module Photos

FIG 9 TOP VIEW

FIG 10 BOTTOM VIEW

11 Key material list

Table 8 EWN-8822CSE2AA Key material list

Type	Model	Footprint	QTY.
Diplexers	LD18D2450LAN-D40/M	1608	2PCS
	RFDIP1607L132A8D1T		
	FLT18D24254959D-3288B		
IC	RTL8822CS-VE-CG	QFN76	1 PCS
Crystal	40MHz （CX/YDL/JWT/TJ）	X3225	1 PCS

EARDATEK 试用水印

12 Package Information

Carrier dimension: （Unit : mm）

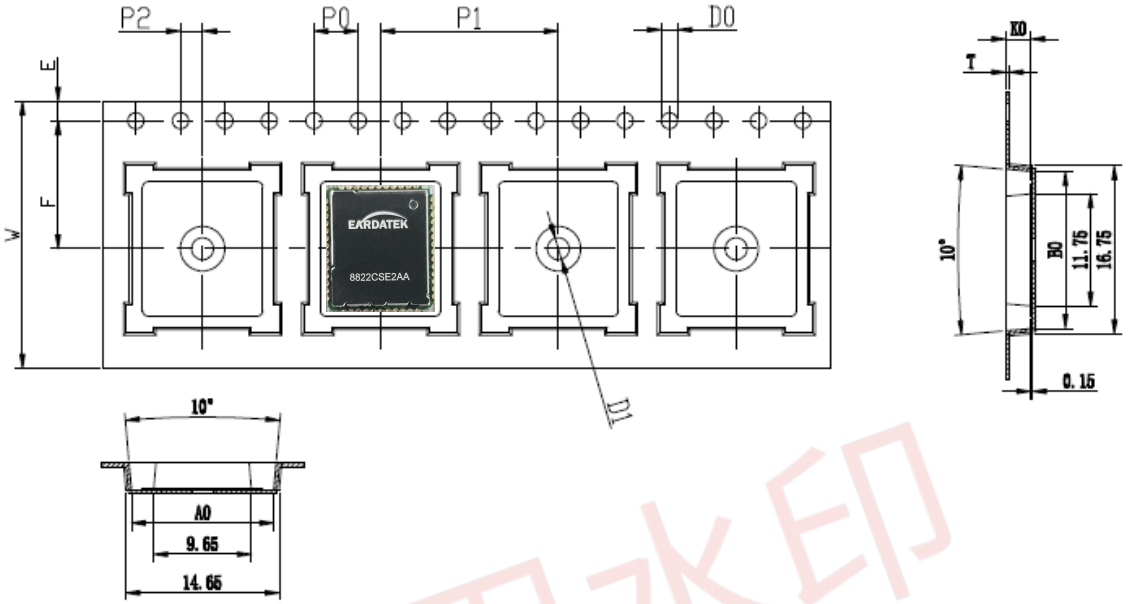

A0	B0	K0	P0	P1	P2
13.65±0.1	15.75±0.1	2.60±0.1	4.0±0.1	20.0±0.1	2.0±0.1
W	T	E	F	D0	D1
24.0±0.3	0.3±0.05	1.75±0.1	11.50±0.1	$\varnothing 1.5^{+0.1}_{-0}$	$\varnothing 1.50^{+0.1}_{-0}$

FIG 11 Carrier size

Reel dimension： D=38cm 1400PCS Modules Per Reel

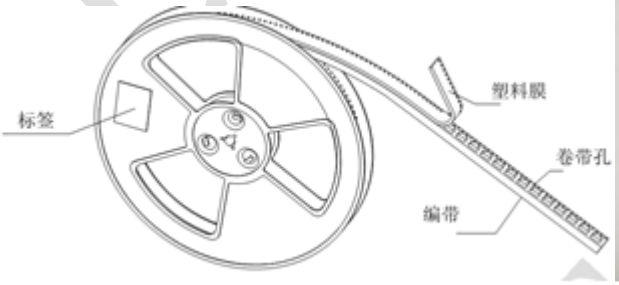

FIG 12 Reel

FIG 13 Reel figure

试用水印

13 Reference design

13.1 Power supply requirement

The module power supply voltage is DC+3.3V, and the maximum module current is 1.5A. The power supply design needs to consider the output current and power interference. To avoid the +3.3V power supply from interfering with other circuits on the motherboard, it is recommended to supply to the module using the regulator circuit alone. the recommended DC-DC circuit structure shown in the figure below. A 4.7uF~10uF capacitor is connected in parallel at 3_3VD output to filter out the interference. A bead is connected in series at 3_3VD output. The bead and capacitor must be placed as close to the module as possible. If you need to share +3.3V with other circuits, consider whether the current of the shared power supply is sufficient.

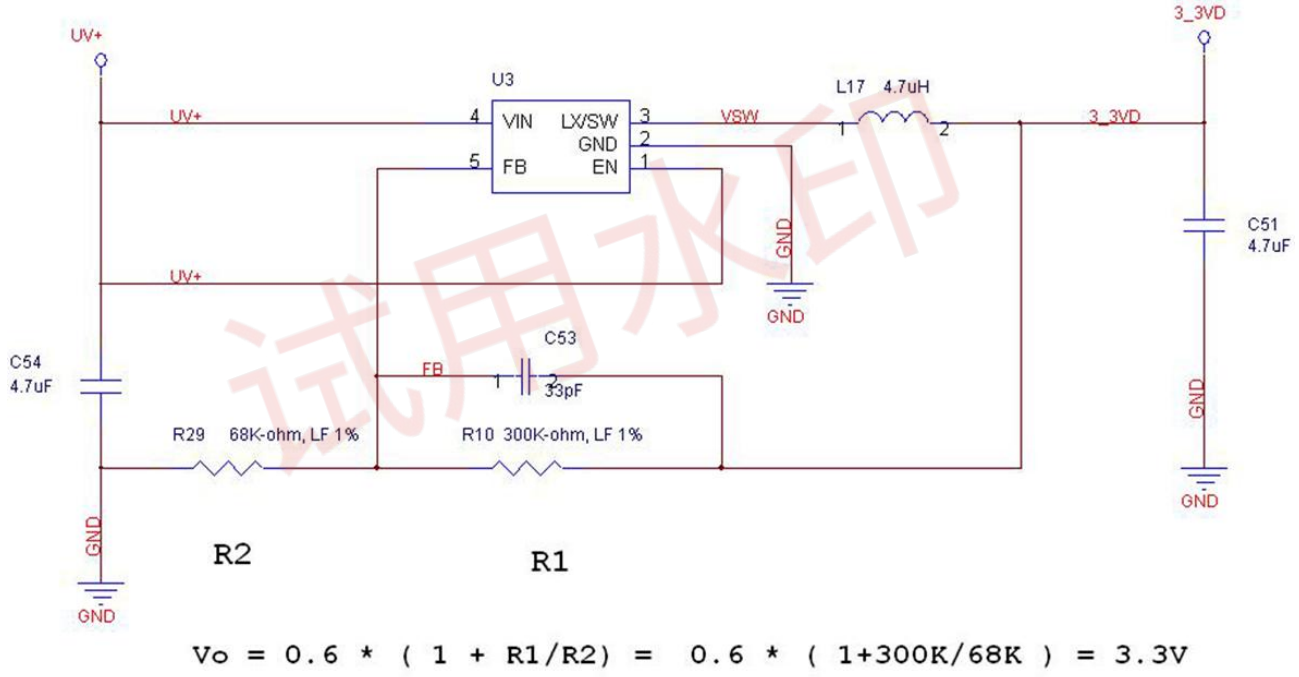

FIG 14 Power supply Circuit schematic

- To use a dedicated power supply circuit for Wi-Fi (and BT)
- The VD33 power ripple shall be <300mVpp for ripple frequency <200KHz
- Transient-response:

  ①the ripple raised from 100/800mA step-response test should be small than 200mVpp.

  ②The ripple swing shall settle down within 1~2 cycles,2 cycles for the worst case.
- Power supply spur: make sure the spurs from switching mode power supply or other noisy circuits are reasonable small. Once issue concerned with such a power supply spur, alternative power supply filtering might be needed.

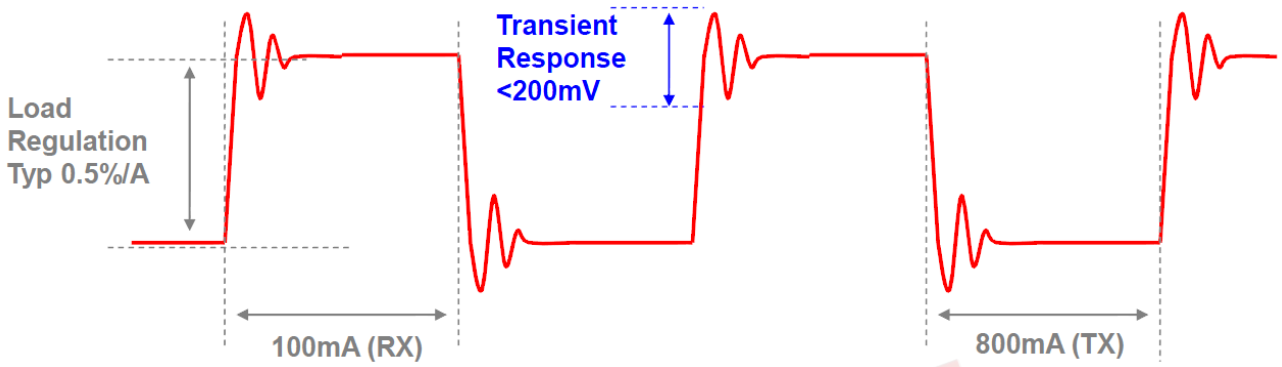

FIG 15 Power supply requirement

EARDATEK 试用水印

13.2 System power on sequence

3.3V Single Power

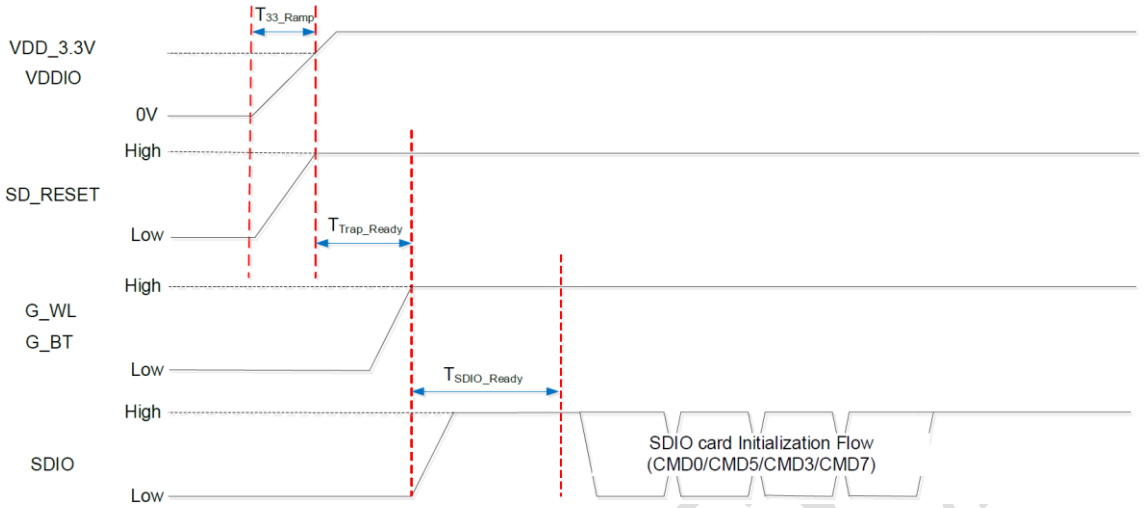

3.3V and 1.8V Dual Power

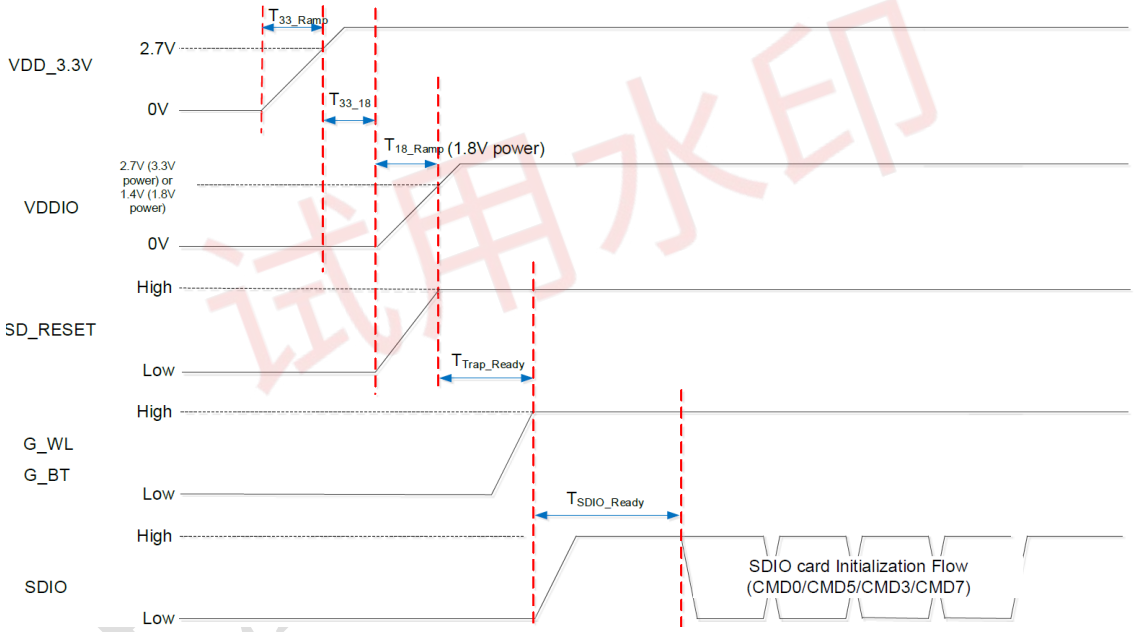

FIG 16 System Power On Sequence

Table 9 System Power On Timing Parameters

Symbol	Min.	Typical	Max.	Unit	Description
T_{18_Ramp}/ T_{33_Ramp}	0.5	1.5	5	ms	The 3.3V or 1.8V power ramp up duration.
T_{33_18}	0	5	-	ms	If 1.8V power is applied, it needs to be equal or slower than 3.3V power
T_{Trap_Ready}	400	500	-	ms	WLAN eFuse autoload. T_{Trap_Ready} = 500ms (Typical)
T_{SDIO_Ready}	10	20	100	ms	SDIO Not Ready Duration. In this state, the module may respond to commands without the ready bit being set. After the ready bit is set, the host will initiate complete card detection procedure.

13.3 SDIO Interface

- The SDIO Bus traces impedance should be 50 Ohm.
- The SDIO Bus traces spacing should be more than 2 times of terace width (H=2W)
- The SDIO Bus traces (CLK, CMD, D0~D3) length matching szhould be less than +/-100 mils, and the total length should be less than 2.5 inches.
- SDIO CLK traces should be surrounded by GND and keep CMD and data away.
- The SDIO Bus traces should not have Stubs and need to reference to GND.
- The maximum VIA counts of the SDIO Bus traces (CLK, CMD, D0~D3) should less than 4.
- The SDIO Bus traces (CLK, CMD, D0~D3) should connect an 0 Ohm series resistor which needs to close to SOC.
- The SDIO Bus traces (CLK, CMD, D0~D3) should reserve pull up resistors 2.2K Ohm to VIO_HOST which needs to close to WIFI.
- The SDIO Bus Traces (CLK, CMD, D0~D3) should reserve 5.6pF caps to GND witch needs to close to WIFI.

13.4 RF circuit

Due to the SMD package, the RF port impedance must be offset after the module is soldered to the mother-board. In order to achieve the best performance, it is recommended to add a PI-type matching network to the motherboard, as shown below (C11, R21, C6). The value of the PI type matching network needs to be debugged according to the actual motherboard to match RF port impedance to 50 Ohm.

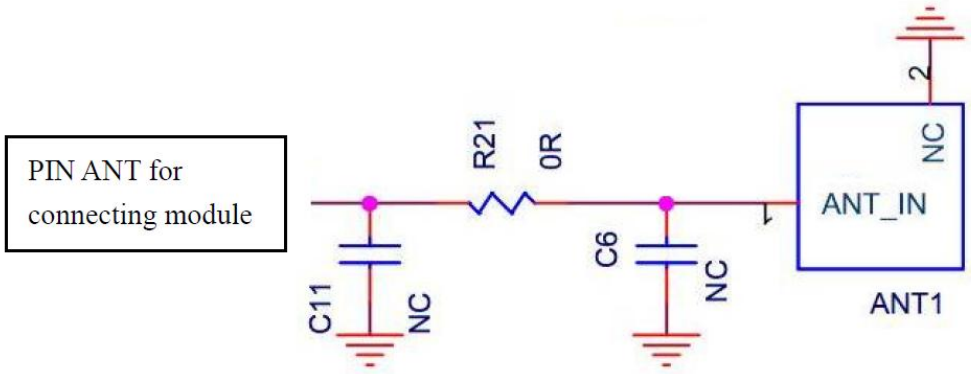

FIG 17 Connect 50 Ohm matching antenna reference circuit

The antenna ANT1 in the figure above must be 50 Ohm. If the antenna is not matched, it is recommended to add a set of PI type matching network at the front of the antenna to match the antenna. Generally, the antenna manufacturers will give Suggestions on matching parameters.

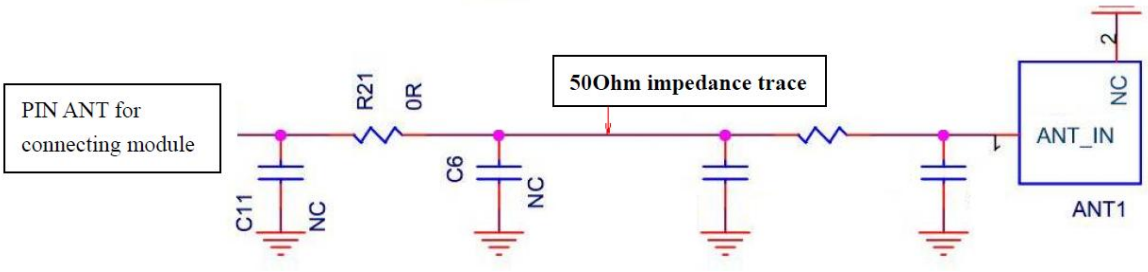

FIG 18 Connect the unmatched antenna reference circuit

The RF line layout should be matched according to 50ohm. The line impedance is related to the plate, plate thickness, line width and copper spacing. Professional software can be used to calculate the line width. Note: for multilayer plates, the plate thickness should calculate the distance from RF routing layer to GND of the next layer. There are RF lines Layout principles:

1. RF line layout needs to match 50 ohms. The line width can be calculated by professional software. (Note: If it is a multi-layer board, the board thickness should calculate the distance from the RF trace layer to the next ground layer.)
2. The RF line must be surrounded by ground copper and ground holes.
3. The PI-type matching circuit for adjusting the impedance of the module is placed close to the module. The PI type matching circuit for matching the antenna is placed close to the antenna.

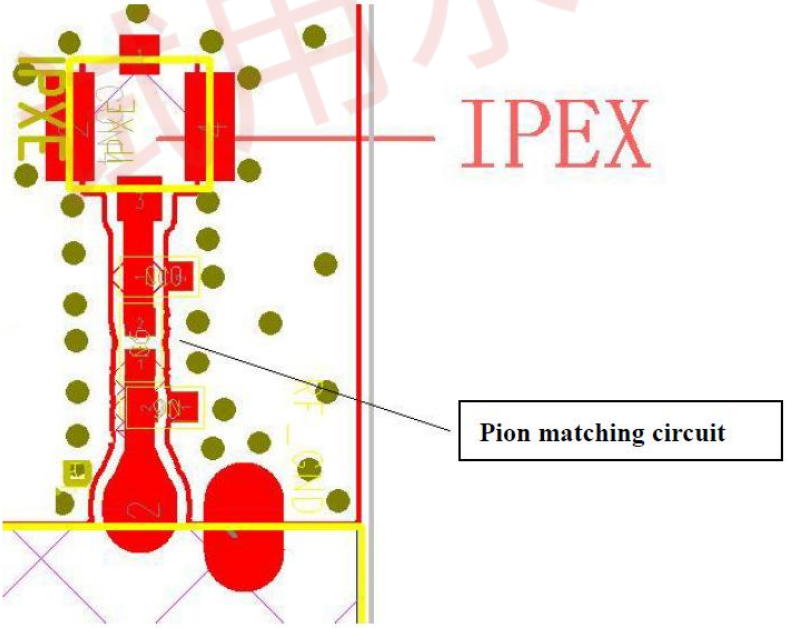

FIG 19 The PI type matching circuit Layout

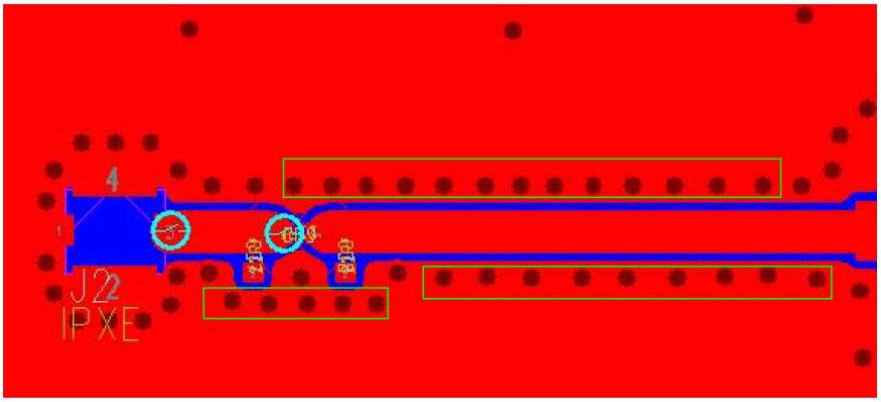

FIG 20 The RF line Layout

4. 4-layer PCB, RF pad must be kept out > = 10mil at the TOP layer, and pads with larger widths(> 1.3 times line), the second layer GND needs to be kept out in equal area.

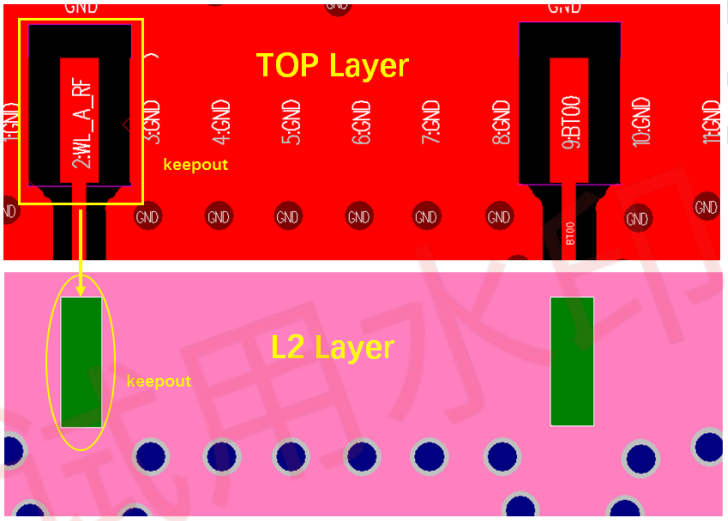

FIG 21 The RF Pads keepout design

13.5 Application Circuit for SD_RESET and BT_DIS_N with Platform

There is internal pull-Up, about 100K, resistor design in BT_DIS_N and SD_RESET. If Host SOC need to control these two pins, it is recommended to choose host GPIO without pull capability to avoid voltage divider. Middle range of IO voltage would affect Module booting up (FIG 22).

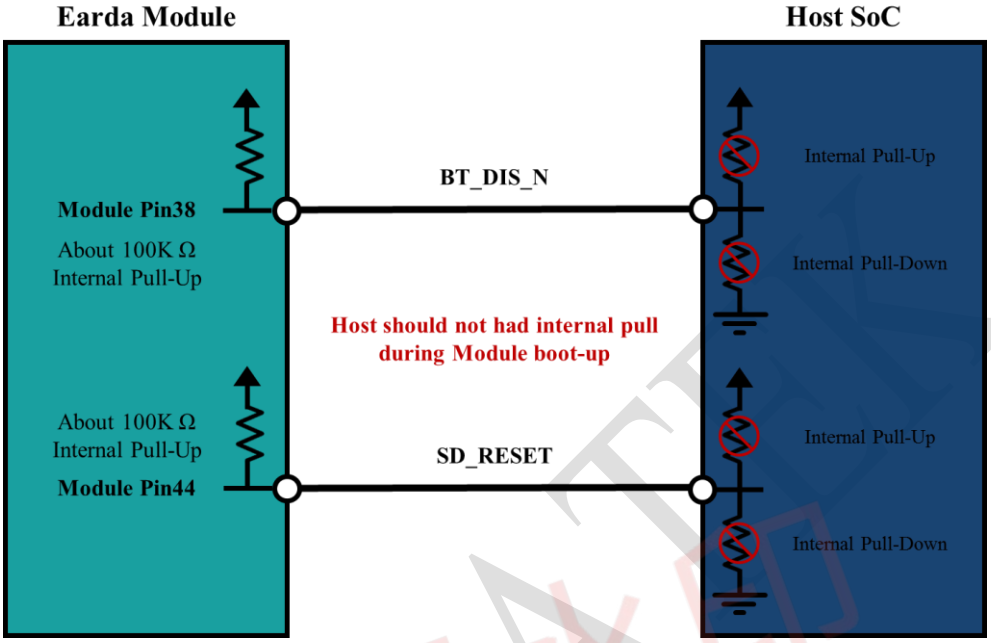

FIG 22 Host GPIO control SD_RESERT and BT_DIS_N

If Host GPIO has Pull-Down capability and it can't be avoided, suggest to add 10KΩ Pull-Down resistor in circuit to ensure IO is in low level. In this way, Module internal Pull-Up 100KΩ could be neglected (FIG 23). Please note external Pull-Down will cause additional static current. BT_DIS_N exists only high level and low level during power-on. Other uncertain voltage values may cause BT to fail to open.

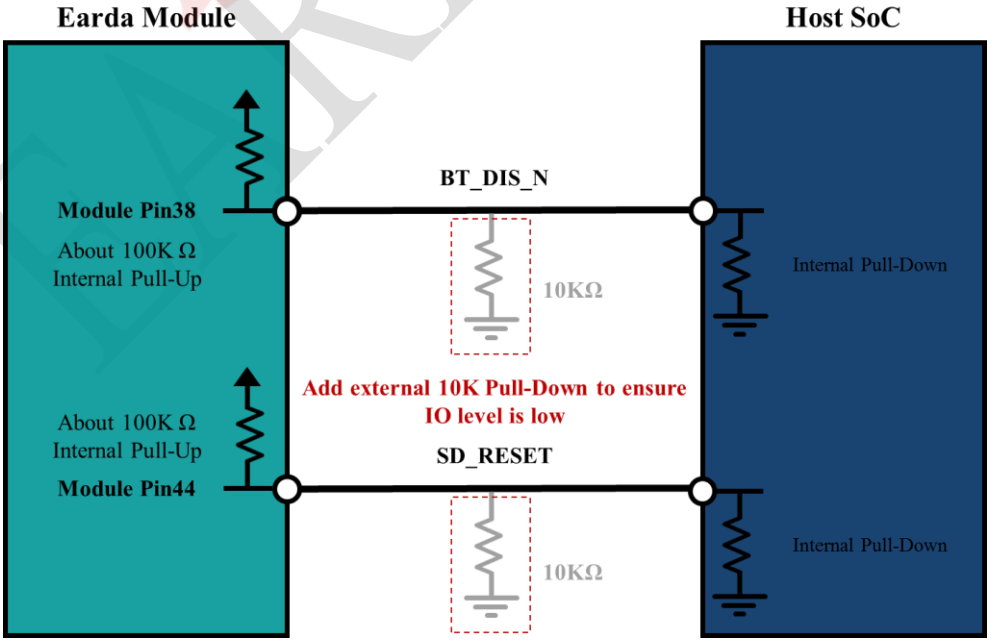

FIG 23 Add external pull down resistor to ensure low level

13.6 Motherboard interference avoidance

Motherboard interference comes from: high-speed data interface (HDMI), the Operating frequency of main chip, DDR, DC-DC power supply. The method of avoiding interference according to the characteristics of various signals is also different. The main methods of interference avoidance include:

1. keeping away from the source of interference;

2. Adding shields to avoid interference leakage;

3. Reasonable layout to eliminate interference.

13.6.1 Interface interference

When HDMI uses the 74.2MHz frequency, its 33x frequency is in the 2.4G band of Wi-Fi, which will seriously interfere with the Wi-Fi signal. If the HDMI frequency is 148.5MHz, although the 16x frequency is not in the Wi-Fi band, the isolation of the frequency is not good, and the Wi-Fi signal will be interfered to some extent. If the distance between the HDMI interface and the Wi-Fi module on the PCB is less than 5cm, the HDMI output display will interfere with the Wi-Fi signal, resulting in problems such as Wi-Fi connection failure and throughput drop. Therefore, keep the location of the Wi-Fi module away from the HDMI port on the hardware layout to avoid interference.

At the same time, if the Wi-Fi antenna is built-in the motherboard, its placement must also be carefully considered to be far from the interface interference. If the antenna is placed in an incorrect position, even if the module is shielded, the interference signal is coupled through the antenna, which will eventually result in a lower Wi-Fi throughput. (Note: In addition to interference, the placement of the internal antenna should also evaluate the effect of the metal interface, motherboard, and housing material on the antenna impedance.)

EARDATEK 博用科技

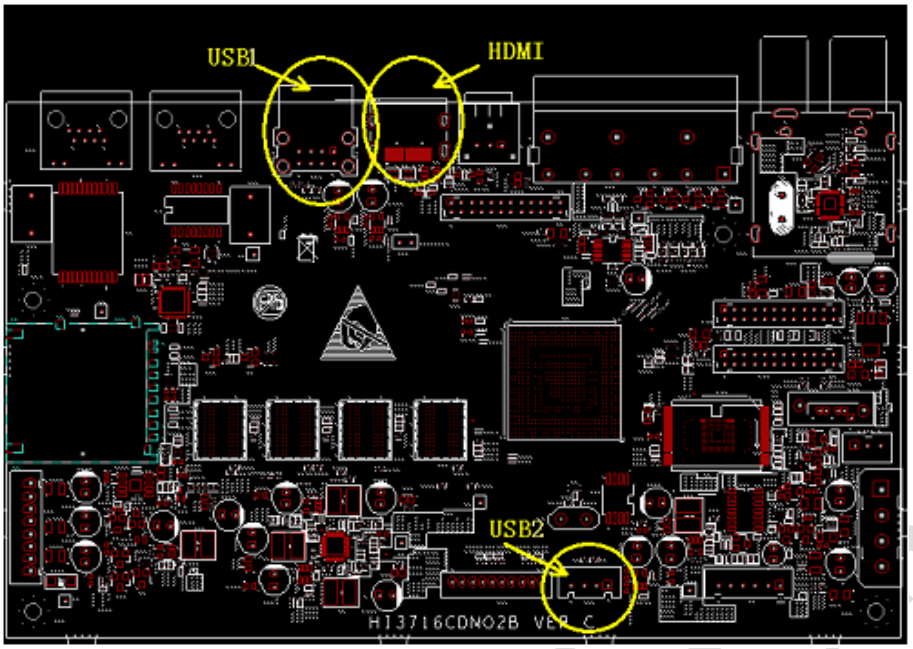

FIG 24 HDMI and USB interference

13.6.2 The main chip interferes with DDR

Because the main chips operate at about 800MHz or DDR2 operate at 667MHz, 3x frequency of 800MHz and 4x frequency of 667MHz are near 2.4GHz band. It must to place Wi-Fi modules and antennas far away from the main chip and DDR. It is strongly recommended that the main chip be isolated from the DDR by a shield. As shown in the figure below.

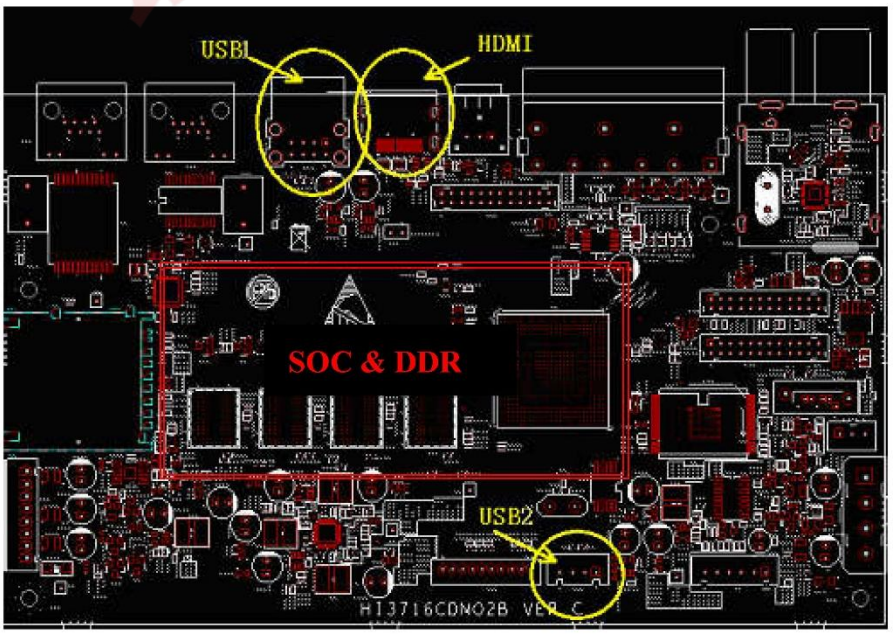

FIG 25 Main chip and DDR interference

13.7 Recommended secondary reflux temperature curve

The number of reflux shall not exceed 2 times, and the tin feeding height of the half hole of the module shall be no less than 1/4.

The lead-free reflux curve requirements of Wi-Fi module products are shown in FIG 26：

Stage	Note	Pb-free assembly
Average ramp-up rate	T_L to Tp	3 ℃/ second max.
Preheat	Temperature min (T_{smin})	150℃
	Temperature max (Tsmax)	200℃
	Time (t_{smin} to t_{smax})	60 – 120 seconds
Time maintained above	Temperature(T_L)	217℃
	Time (t_L)	60 – 150 seconds
Peak package body temperature (Tp)		Tp must not exceed the specified classification temp(Tc=245℃).
Time(tp) within 5℃ of the specified classification temperature (Tc)		30 seconds
Ramp-down rate (Tp to T_L)		6 ℃ / seconds max.
Time 25℃ to peak temperature		8 minutes max.

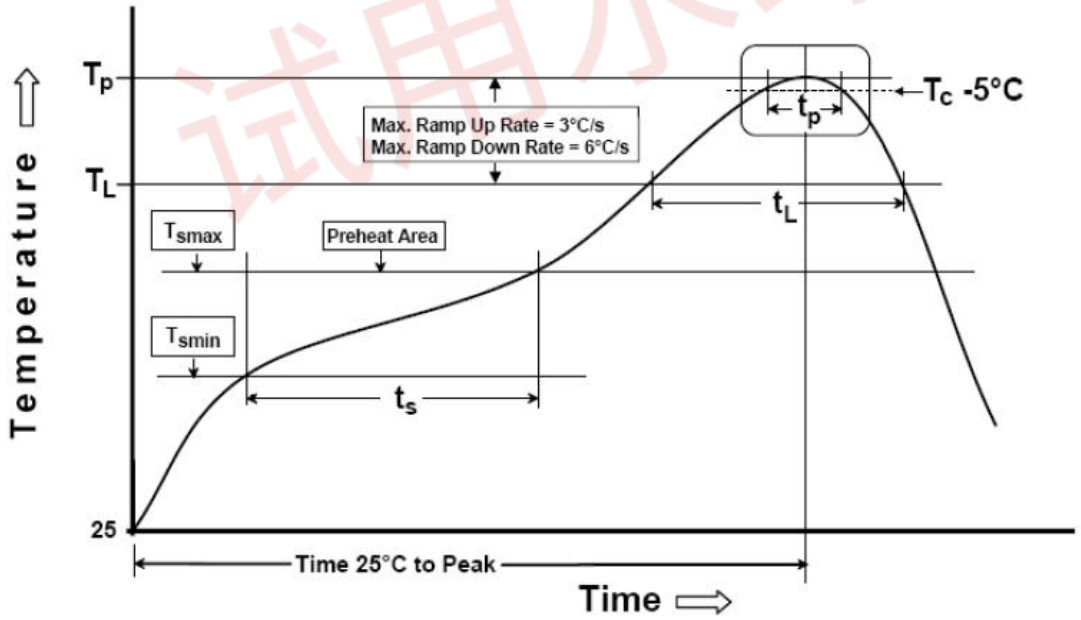

FIG 26 Furnace temperature curve

NOTE:

1.The maximum furnace temperature of the module is 260℃, don't exceed this temperature.

2.The gold plating thickness of the module pad is 2u".

14 Revision History

Revision	Release Date	Summary	Revised By
V1.0	2022-01-26	First release	Jisheng Wang
V1.1	2022-08-01	Update Module Photos	Shuize Wang
V1.2	2022-09-20	Update Wi-Fi Specification	Shuize Wang
V1.3	2022-09-29	Update Wi-Fi Specification	Shuize Wang
V1.4	2023-01-05	Update Key material list	Shuize Wang
V1.5	2023-02-02	Update System Block Diagram, Module Photos and Reference design	Shuize Wang
V1.6	2023-04-23	Update Module Laser Etching Silkscreen, RF Pin Definition, Application Circuit for SD_RESET and BT_REG_ON with Platform	Shuize Wang
V1.7	2023-10-10	Update Wi-Fi Specification(Frequency)	Shuize Wang
V1.8	2024-11-22	Update System Block Diagram, PHY Specification, DC Characteristics, Pin Definition, Reference design, update peak current parameter	Shuize Wang

EARDATEK 试用水印

FCC Statement

FCC standards: FCC CFR Title 47 Part 15 Subpart C Section 15.407,15.247

Device is equipped with External antenna, Antenna gain: 2.4G Wi-Fi/BLE/BT:3.98di, 5.2G Wi-Fi:4.39dBi,5.3G Wi-Fi:4.53dBi, 5.6G Wi-Fi:4.81dBi,5.8G Wi-Fi:4.72dBi,

This device complies with part 15 of the FCC Rules. Operation is subject to the following two conditions:
(1) This device may not cause harmful interference, and (2) this device must accept any interference received, including interference that may cause undesired operation. Any Changes or modifications not expressly approved by the party responsible for compliance could void the user's authority to operate the equipment.

NOTE: This equipment has been tested and found to comply with the limits for a Class B digital device, pursuant to part 15 of the FCC Rules. These limits are designed to provide reasonable protection against harmful interference in a residential installation. This equipment generates, uses and can radiate radio frequency energy and, if not installed and used in accordance with the instructions, may cause harmful interference to radio communications. However, there is no guarantee that interference will not occur in a particular installation. If this equipment does cause harmful interference to radio or television reception, which can be determined by turning the equipment off and on, the user is encouraged to try to correct the interference by one or more of the following measures:

- Reorient or relocate the receiving antenna.
- Increase the separation between the equipment and receiver.
- Connect the equipment into an outlet on a circuit different from that to which the receiver is connected.
- Consult the dealer or an experienced radio/TV technician for help.

We will retain control over the final installation of the modular such that compliance of the end product is assured. In such cases, an operating condition on the limit modular approval for the module must be only approved for use when installed in devices produced by a specific manufacturer. If any hardware modify or RF control software modify will be made by host manufacturer, C2PC or new certificate should be apply to get approval,if those change and modification made by host manufacturer not expressly approved by the party responsible for compliance ,then it is illegal.

FCC Radiation Exposure Statement

The modular can be installed or integrated in mobile or fix devices . This modular cannot be installed in any portable device if without further certification such as C2PC with SAR. This modular complies with FCC RF radiation exposure limits set forth for an uncontrolled environment. This transmitter must not be co-located or operating in conjunction with any other antenna or transmitter. This modular must be installed and operated with a minimum distance of 20 cm between the radiator and user body.

If the FCC identification number is not visible when the module is installed inside another device, then the outside of the device into which the module is installed must also display a label referring to the enclosed module. This exterior label can use wording such as the following: “Contains Transmitter Module FCC ID: 2AMM6-EWN8822CSE2AA Or Contains FCC ID: 2AMM6-EWN8822CSE2AA”

When the module is installed inside another device, the user manual of the host must contain below warning statements;
1. This device complies with Part 15 of the FCC Rules. Operation is subject to the following two conditions:
(1) This device may not cause harmful interference;
(2) This device must accept any interference received, including interference that may cause undesired operation.

NOTE: This equipment has been tested and found to comply with the limits for a Class B digital device, pursuant to part 15 of the FCC Rules. These limits are designed to provide reasonable protection against harmful interference in a residential installation. This equipment generates, uses and can radiate radio frequency energy and, if not installed and used in accordance with the instructions, may cause harmful interference to radio communications. However, there is no guarantee that interference will not occur in a particular installation. If this equipment does cause harmful interference to radio or television reception, which can be determined by turning the equipment off and on, the user is encouraged to try to correct the interference by one or more of the following measures:

- Reorient or relocate the receiving antenna.
- Increase the separation between the equipment and receiver.
- Connect the equipment into an outlet on a circuit different from that to which the receiver is connected.
- Consult the dealer or an experienced radio/TV technician for help.

2. Changes or modifications not expressly approved by the party responsible for compliance could void the user's authority to operate the equipment. The devices must be installed and used in strict accordance with the manufacturer's instructions as described in the user documentation that comes with the product. Any company of the host device which install the modular with limit modular approval should perform the test of radiated & conducted emission and spurious emission, etc. according to FCC part 15C : 15.407,15.247 ,15B Class B requirement, Only if the test result comply with FCC part 15C : 15.407,15.247 ,15B Class B requirement, then the host can be sold legally.

IC Compliance Statement

This device complies with Innovation, Science and Economic Development Canada (ISED) licence-exempt RSS standard(s).
Operation is subject to the following two conditions:
1. This device may not cause harmful interference, and
2. This device must accept any interference received, including interference that may cause undesired operation of the device.

Modification Warning
Any changes or modifications not expressly approved by the party responsible for compliance could void the user's authority to operate this equipment.

RF Radiation Exposure Statement
This equipment complies with IC RSS-102 radiation exposure limits set forth for an uncontrolled environment. This equipment shall be installed and operated with a minimum distance of 20 cm between the radiator and the human body.
This transmitter must not be co-located or operating in conjunction with any other antenna or transmitter.

Host Integration Note
This module is certified for installation in mobile or fixed devices only. It shall not be installed in portable devices without further certification (e.g. C2PC with SAR evaluation).
The host manufacturer shall perform additional verification for radiated emissions, conducted emissions and spurious emissions per ICES-003 and relevant RSS standards to ensure end-product compliance.

试用水印