CTC Laboratories, Inc.

1-2/F., Building 2, Jiaquan Building, Guanlan High-Tech Park, Shenzhen, Guangdong, China
Tel: +86-755- 27521059 Fax: +86-755- 27521011 Http://www.sz-ctc.org.cn

TEST REPORT

Report No. ·····:	**CTC20220714E01**
FCC ID·····:	**2AMN5-78355**
Applicant·····:	**MARKLYN GROUP INC**
Address·····:	753011 2nd Line EHS. Mono. ON. L9W 5W4. Canada
Manufacturer·····:	MARKLYN GROUP INC
Address·····:	753011 2nd Line EHS. Mono. ON. L9W 5W4. Canada
Product Name·····:	**FloGlo 24" Starter Kit**
Trade Mark·····:	Alpena
Model/Type reference·····:	78355
Listed Model(s) ·····:	78359
Standard·····:	**FCC CFR Title 47 Part 15 Subpart C Section 15.249**
Date of receipt of test sample…:	July 15, 2022
Date of testing……..:	July 15, 2022~ July 27, 2022
Date of issue……....:	July 27, 2022
Result……:	**PASS**

Compiled by: (Printed name+signature)	Zoe Xie	Zoe Xie
Supervised by: (Printed name+signature)	Miller Ma	Miller Ma
Approved by: (Printed name+signature)	Totti Zhao	Totti Zhao

Testing Laboratory Name……:	**CTC Laboratories, Inc.**
Address……:	1-2/F., Building 2, Jiaquan Building, Guanlan High-Tech Park, Shenzhen, Guangdong, China

This test report may be duplicated completely for legal use with the approval of the applicant. It should not be reproduced except in full, without the written approval of our laboratory. The client should not use it to claim product endorsement by CTC. The test results in the report only apply to the tested sample. The test report shall be invalid without all the signatures of testing engineers, reviewer and approver. Any objections must be raised to CTC within 15 days since the date when the report is received. It will not be taken into consideration beyond this limit. The test report merely correspond to the test sample.

Table of Contents Page

1. TEST SUMMARY 3

1.1. TEST STANDARDS 3
1.2. REPORT VERSION 3
1.3. TEST DESCRIPTION 4
1.4. TEST FACILITY 5
1.5. MEASUREMENT UNCERTAINTY 5
1.6. ENVIRONMENTAL CONDITIONS 6

2. GENERAL INFORMATION 7

2.1. CLIENT INFORMATION 7
2.2. GENERAL DESCRIPTION OF EUT 7
2.3. DESCRIPTION OF TEST MODES 8
2.4. ACCESSORY EQUIPMENT INFORMATION 8
2.5. MEASUREMENT INSTRUMENTS LIST 9

3. TEST ITEM AND RESULTS 11

3.1. AC POWER LINE CONDUCTED EMISSIONS 11
3.2. 20 DB OCCUPIED BANDWIDTH 13
3.3. RADIATED FIELD STRENGTH OF THE FUNDAMENTAL SIGNAL 16
3.4. RADIATED SPURIOUS EMISSIONS AND BAND EDGE EMISSION 18
3.5. ANTENNA REQUIREMENT 24

1. TEST SUMMARY

1.1. Test Standards

The tests were performed according to following standards:

FCC Rules Part 15.249: Operation within the bands 902-928 MHz, 2400-2483.5 MHz, 5725-5875 MHz, and 24.0-24.25 GHz.
ANSI C63.10-2013: American National Standard for Testing Unlicensed Wireless Devices.

1.2. Report version

Revised No.	Date of issue	Description
01	July 27, 2022	Original

1.3. Test Description

Test Item	Section in CFR 47	Result	Test Engineer
AC Power Line Conducted Emissions	15.207	N/A	N/A
20dB Occupied Bandwidth	15.215/15.249	PASS	Alicia Liu
Field strength of the Fundamental signal	15.249(a)	PASS	Alicia Liu
Spurious Emissions	15.209/15.249(a)	PASS	Alicia Liu
Band edge Emissions	15.205/15.249(d)	PASS	Alicia Liu
Antenna requirement	15.203	PASS	Alicia Liu

Note: The measurement uncertainty is not included in the test result.
"N/A" This device is only powered battery, no need for part 15.207.

1.4. Test Facility

Address of the report laboratory

CTC Laboratories, Inc.

Add: 1-2/F., Building 2, Jiaquan Building, Guanlan High-Tech Park, Shenzhen, Guangdong, China

Laboratory accreditation

The test facility is recognized, certified, or accredited by the following organizations:

A2LA-Lab Cert. No.: 4340.01
CTC Laboratories, Inc. EMC Laboratory has been accredited by A2LA for technical competence in the field of electrical testing, and proved to be in compliance with ISO/IEC 17025:2017 General Requirements for the Competence of Testing and Calibration Laboratories and any additional program requirements in th e identified field of testing.

FCC (Registration No.: 951311, Designation Number CN1208)
CTC Laboratories, Inc. EMC Laboratory has been registered and fully described in a report filed with the (F CC) Federal Communications Commission. The acceptance letter from the FCC is maintained inour files. Registration 951311, Aug 26, 2017.

1.5. Measurement Uncertainty

The data and results referenced in this document are true and accurate. The reader is cautioned that there may be errors within the calibration limits of the equipment and facilities. The measurement uncertainty was calculated for all measurements listed in this test report acc. to TR-100028-01" Electromagnetic compatibility and Radio spectrum Matters (ERM);Uncertainties in the measurement of mobile radio equipment characteristics; Part 1" and TR-100028-02 "Electromagnetic compatibility and Radio spectrum Matters (ERM);Uncertainties in the measurement of mobile radio equipment characteristics; Part 2 " and is documented in the CTC Laboratories, Inc.quality system acc. to DIN EN ISO/IEC 17025. Furthermore, component and process variability of devices similar to that tested may result in additional deviation. The manufacturer has the sole responsibility of continued compliance of the device.

Below is the best measurement capability for CTC Laboratories, Inc.

Test Items	Measurement Uncertainty	Notes
Transmitter power conducted	0.42 dB	(1)
Transmitter power Radiated	2.14 dB	(1)
Conducted spurious emissions 9kHz~40GHz	1.60 dB	(1)
Radiated spurious emissions 9kHz~40GHz	2.20 dB	(1)
Conducted Emissions 9kHz~30MHz	3.20 dB	(1)
Radiated Emissions 30~1000MHz	4.70 dB	(1)
Radiated Emissions 1~18GHz	5.00 dB	(1)
Radiated Emissions 18~40GHz	5.54 dB	(1)
Occupied Bandwidth	---------	(1)

Note (1): This uncertainty represents an expanded uncertainty expressed at approximately the 95% confidence level using a coverage factor of k=1.96.

1.6. Environmental conditions

During the measurement the environmental conditions were within the listed ranges:

Temperature:	21°C ~ 27°C
Relative Humidity:	40% ~ 60%
Air Pressure:	101kPa

2. GENERAL INFORMATION

2.1. Client Information

Applicant:	MARKLYN GROUP INC
Address:	753011 2nd Line EHS. Mono. ON. L9W 5W4. Canada
Manufacturer:	MARKLYN GROUP INC
Address:	753011 2nd Line EHS. Mono. ON. L9W 5W4. Canada

2.2. General Description of EUT

Product Name:	FloGlo 24" Starter Kit
Trade Mark:	/
Model/Type reference:	78355
Listed Model(s):	/
Power supply:	DC 3V from Battery
Adapter mode:	/
Hardware version:	/
Software version:	/
Serial number:	90JJ01kj2
RF Specification	
Modulation:	GFSK
Operation frequency:	2425-2455MHz
Channel number:	4
Channel separation:	10MHz
Antenna type:	Integral Antenna
Antenna gain:	1dBi

2.3. Description of Test Modes

The EUT has been tested under test mode condition. The Applicant provides software to control the EUT for staying in continuous transmitting and receiving mode for testing. Channels 01/02/04 were selected for testing.

Operation Frequency List:

Channel	Frequency (MHz)
01	**2425**
02	**2435**
03	**2445**
04	**2455**

Test Mode:

For RF test items
The engineering test program was provided and enabled to make EUT continuous transmit. (duty cycle>98%).
For AC power line conducted emissions:
The EUT was set to connect with large package sizes transmission.
For Radiated spurious emissions test item:
The engineering test program was provided and enabled to make EUT continuous transmit. The EUT in each of three orthogonal axis emissions had been tested, but only the worst case (X axis) data recorded in the report.

2.4. Accessory Equipment Information

Equipment Information			
Name	Model	S/N	Manufacturer
/	/	/	/
Cable Information			
Name	Shielded Type	Ferrite Core	Length
/	/	/	/
Test Software Information			
Name	Software version	Power Level	/
EMI test	V1.1	Index	/

2.5. Measurement Instruments List

Tonscend JS0806-2 Test system					
Item	Test Equipment	Manufacturer	Model No.	Serial No.	Calibrated until
1	Spectrum Analyzer	KEYSIGHT	N9020A	100231	Dec. 25, 2022
2	Spectrum Analyzer	Rohde & Schwarz	FUV40-N	101331	Mar. 15, 2023
3	MXG Vector Signal Generator	Agilent	N5182A	MY47420864	Dec. 25, 2022
4	Signal Generator	Agilent	E8257D	MY46521908	Dec. 25, 2022
5	Power Sensor	Agilent	U2021XA	MY5365004	Mar. 15, 2023
6	Power Sensor	Agilent	U2021XA	MY5365006	Mar. 15, 2023
7	High and low temperature box	ESPEC	MT3035	N/A	Mar. 24, 2023
8	Wideband Radio Communication Tester	Rohde & Schwarz	CMW500	102414	Dec. 25, 2022
9	300328 v2.2.2 test system	TONSCEND	v2.6	/	/

Radiated emission(3m chamber 2)					
Item	Test Equipment	Manufacturer	Model No.	Serial No.	Calibrated Until
1	Trilog-Broadband Antenna	Schwarzbeck	VULB 9168	9168-1013	Jan. 12, 2023
2	Horn Antenna	Schwarzbeck	BBHA 9120D	9120D-647	Dec. 24, 2022
3	Spectrum Analyzer	R&S	FSU26	100105	Dec. 25, 2022
4	Spectrum Analyzer	R&S	FSV40-N	101331	Mar. 15, 2023
5	Pre-Amplifier	SONOMA	310	186194	Dec. 25, 2022
6	Low Noise Pre-Amplifier	EMCI	EMC051835	980075	Dec. 25, 2022
7	Test Receiver	R&S	ESCI7	100967	Dec. 25, 2022

Radiated emission(3m chamber 3)					
Item	Test Equipment	Manufacturer	Model No.	Serial No.	Calibrated Until
1	Trilog-Broadband Antenna	Schwarzbeck	VULB 9168	9168-759	Nov. 09, 2023
2	Horn Antenna	Schwarzbeck	BBHA 9120D	9120D-647	Dec. 24, 2022
3	Test Receiver	Keysight	N9038A	MY56400071	Dec. 25, 2022
4	Broadband Premplifier	SCHWARZBECK	BBV9743B	259	Dec. 25, 2022
5	Mirowave Broadband Amplifier	SCHWARZBECK	BBV9718C	111	Dec. 25, 2022
6	Loop Antenna	ZHINAN	ZN30900A	/	Dec. 25, 2022
Conducted Emission					
Item	Test Equipment	Manufacturer	Model No.	Serial No.	Calibrated until
1	LISN	R&S	ENV216	101112	Dec. 25, 2022
2	LISN	R&S	ENV216	101113	Dec. 25, 2022
3	EMI Test Receiver	R&S	ESCS30	100353	Dec. 25, 2022

Test software				
Item	Test Description	Manufacturer	Model No.	Version
1	Radiated emission/ Conducted Emission	Farad	EZ-EMC	RA-03A1

Note:1. The Cal. Interval was one year.
2. The cable loss has calculated in test result which connection between each test instruments.

3. TEST ITEM AND RESULTS

3.1. AC Power Line Conducted Emissions

Limit

Frequency	Maximum RF Line Voltage (dBμV)	
	Quasi-peak Level	Average Level
150kHz~500kHz	66 ~ 56 *	56 ~ 46 *
500kHz~5MHz	56	46
5MHz~30MHz	60	50

Notes:
(1) *Decreasing linearly with logarithm of the frequency.
(2) The lower limit shall apply at the transition frequencies.
(3) The limit decrease in line with the logarithm of the frequency in the range of 0.15 to 0.50MHz.

Test Configuration

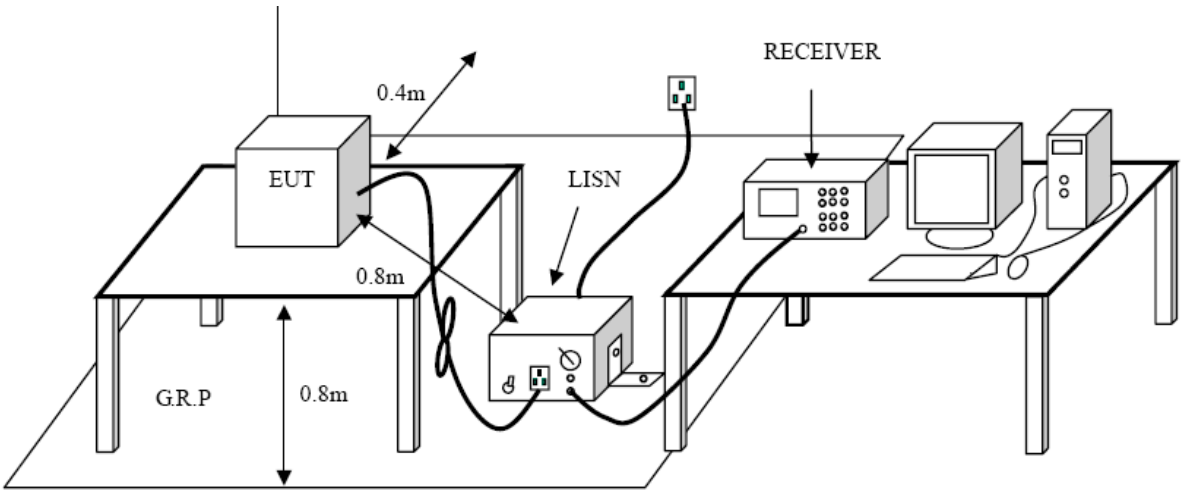

Test Procedure

1. The EUT was setup according to ANSI C63.10:2013 requirements.
2. The EUT was placed on a platform of nominal size, 1 m by 1.5 m, raised 80 cm above the conducting ground plane. The vertical conducting plane was located 40 cm to the rear of the EUT. All other surfaces of EUT were at least 80 cm from any other grounded conducting surface.
3. The EUT and simulators are connected to the main power through a line impedances stabilization network (LISN). The LISN provides a 50ohm /50uH coupling impedance for the measuring equipment. The peripheral devices are also connected to the main power through a LISN. (Please refer to the block diagram of the test setup and photographs)
4. Each current-carrying conductor of the EUT power cord, except the ground (safety) conductor, was individually connected through a LISN to the input power source.
5. The excess length of the power cord between the EUT and the LISN receptacle were folded back and forth at the center of the lead to form a bundle not exceeding 40 cm in length.
6. Conducted Emissions were investigated over the frequency range from 0.15MHz to 30MHz using a receiver bandwidth of 9 kHz.
7. During the above scans, the emissions were maximized by cable manipulation.

Test Mode

Please refer to the clause 2.3

Test Results

N/A

3.2. 20 dB Occupied Bandwidth

Limit

Operation frequency range 2400MHz~2483.5MHz.

Test Configuration

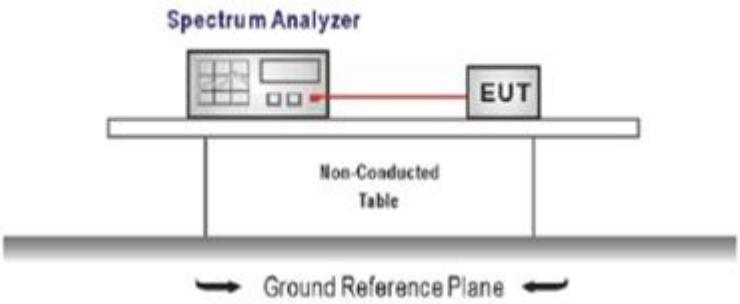

Test Procedure

1. The transmitter output was connected to the spectrum analyzer through an attenuator, the path loss was compensated to the results for each measurement.
2. Set to the maximum power setting and enable the EUT transmit continuously
3. Use the following spectrum analyzer settings:
   Span = approximately 2 to 3 times the 20 dB bandwidth, centered on a test channel
   RBW ≥ 1% of the 20 dB bandwidth, VBW ≥ RBW
   Sweep = auto, Detector function = peak, Trace = max hold
4. Measure and record the results in the test report.

Test Mode:

Please refer to the clause 2.3

Test Results

Channel	20dB Bandwidth (KHz)	Result
Low	1091	Pass
Middle	1089	Pass
High	1098	Pass

GFSK-Low	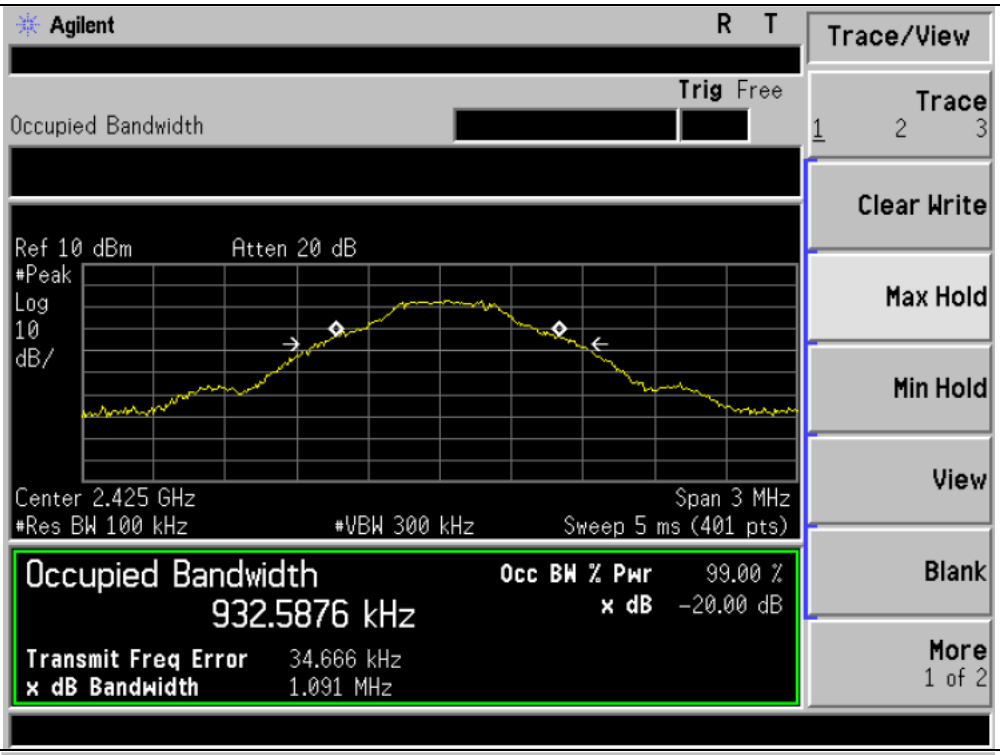
GFSK-Middle	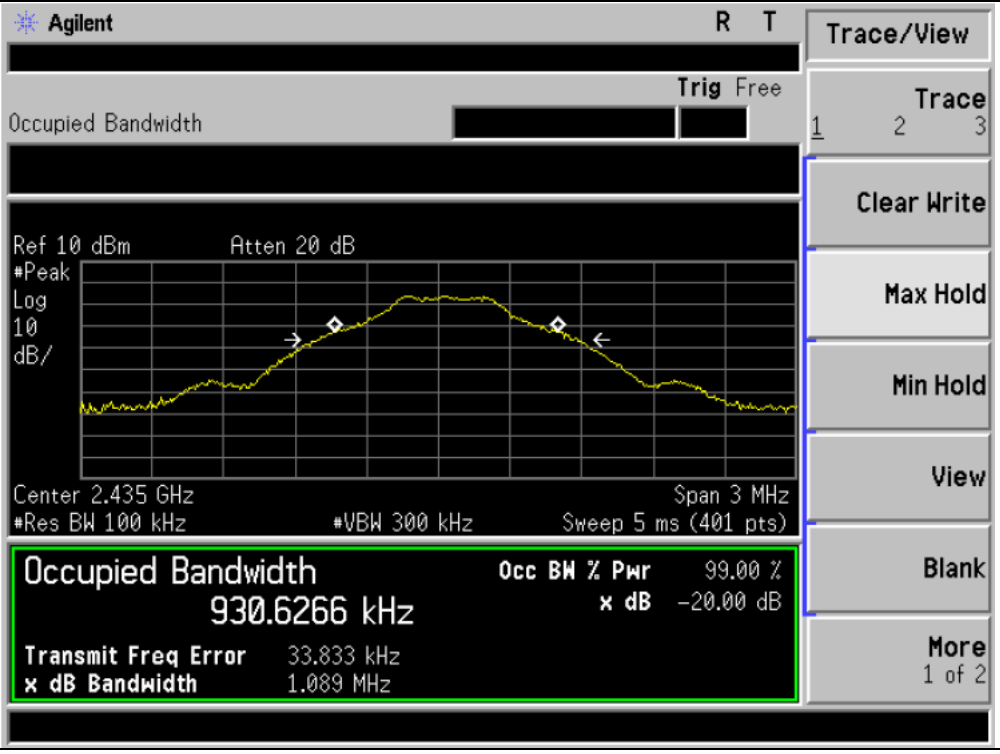

GFSK-High	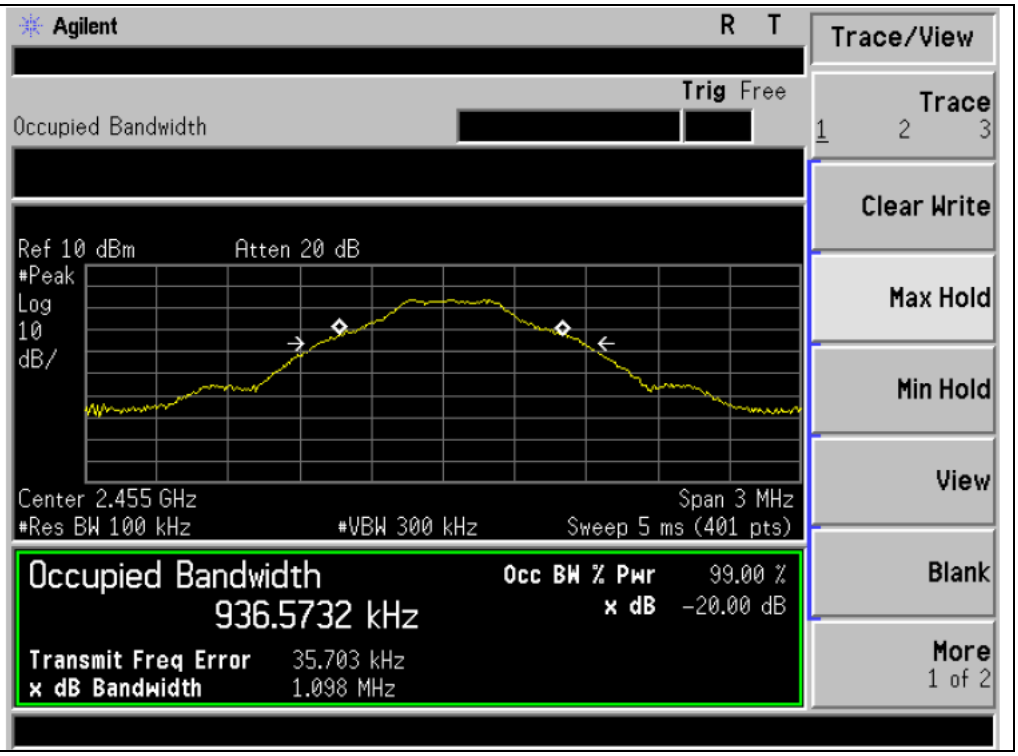 Agilent R T Trig Free Occupied Bandwidth Ref 10 dBm Atten 20 dB #Peak Log 10 dB/ Center 2.455 GHz Span 3 MHz #Res BW 100 kHz #VBW 300 kHz Sweep 5 ms (401 pts) Occupied Bandwidth 936.5732 kHz Occ BW % Pwr 99.00 % x dB -20.00 dB Transmit Freq Error 35.703 kHz x dB Bandwidth 1.098 MHz Trace/View Trace 1 2 3 Clear Write Max Hold Min Hold View Blank More 1 of 2

3.3. Radiated field strength of the fundamental signal

Limit

Fundamental frequency	Field strength of fundamental (millivolts/meter/ AVG)	Field strength of harmonics (microvolts/meter/ AVG)
902-928 MHz	50 (94dBuV/m @3m)	500 (54dBuV/m @3m)
2400-2483.5 MHz	50 (94dBuV/m @3m)	500 (54dBuV/m @3m)
5725-5875 MHz	50 (94dBuV/m @3m)	500 (54dBuV/m @3m)
24.0-24.25 GHz	250 (108dBuV/m @3m)	2500 (68dBuV/m @3m)

Frequencies above 1000 MHz, the field strength limits are based on average limits

Test Configuration

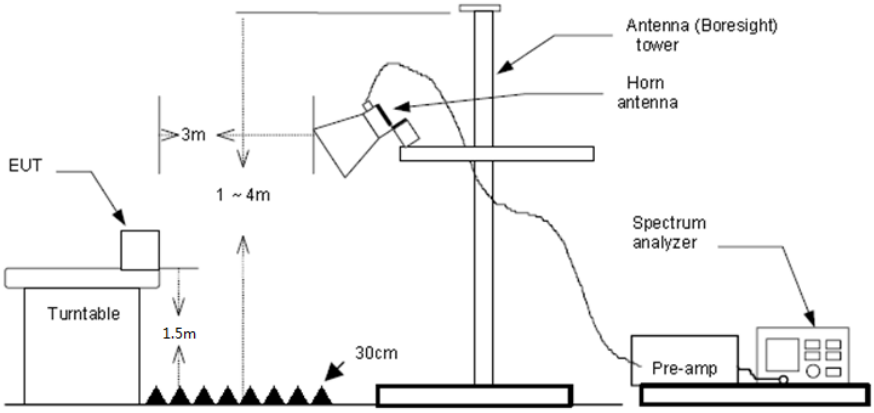

Test Procedure

1. The EUT was setup and tested according to ANSI C63.10:2013 requirements.
2. The EUT is placed on a turn table which is 1.5 meter above ground. The turn table is rotated 360 degrees to determine the position of the maximum emission level.
3. The EUT was positioned such that the distance from antenna to the EUT was 3 meters.
4. The antenna is scanned from 1 meter to 4 meters to find out the maximum emission level. This is repeated for both horizontal and vertical polarization of the antenna. In order to find the maximum emission, all of the interface cables were manipulated according to ANSI C63.10:2013 on radiated measurement.
5. The receiver set as follow:
   RBW=1MHz, VBW=3MHz Peak detector for Peak value.

Test Mode

Please refer to the clause 2.3

Test Results

Frequency (MHz)	Reading (dBuV)	Factor dB/m	Measure (dBuV/m)	Limit (dBuV/m)	Margin (dB)	Polar H/V	Detector
2425	101.23	-11.25	89.98	114	-24.02	H	PK
2425	100.12	-11.25	88.87	94	-5.13	H	AV
2435	101.43	-9.41	92.02	114	-21.98	H	PK
2435	100.12	-9.41	90.71	94	-3.29	H	AV
2455	101.22	-11.07	90.15	114	-23.85	H	PK
2455	100.45	-11.07	89.38	94	-4.62	H	AV
2425	102.58	-11.25	91.33	114	-22.67	V	PK
2425	102.06	-11.25	90.81	94	-3.19	V	AV
2435	102.02	-9.41	92.61	114	-21.39	V	PK
2435	101.04	-9.41	91.63	94	-2.37	V	AV
2455	102.37	-11.07	91.3	114	-22.7	V	PK
2455	101.72	-11.07	90.65	94	-3.35	V	AV

Remarks:
1.Factor (dB/m) = Antenna Factor (dB/m)+Cable Factor (dB)-Pre-amplifier Factor
2. Measure Level= Read Level+ Correct Factor
3. Margin = Measure Level-Limit

3.4. Radiated Spurious Emissions and Band edge Emission

Limit

FCC CFR Title 47 Part 15 Subpart C Section 15.209

Frequency	Limit (dBuV/m @3m)	Value
30MHz~88MHz	40.00	Quasi-peak
88MHz~216MHz	43.50	Quasi-peak
216MHz~960MHz	46.00	Quasi-peak
960MHz~1GHz	54.00	Quasi-peak
Above 1GHz	54.00	Average
	74.00	Peak

Test Configuration

- 9 kHz ~ 30 MHz

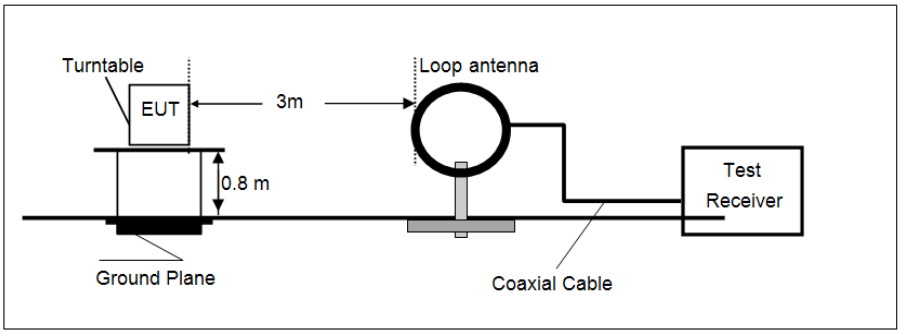

- 30 MHz ~ 1 GHz

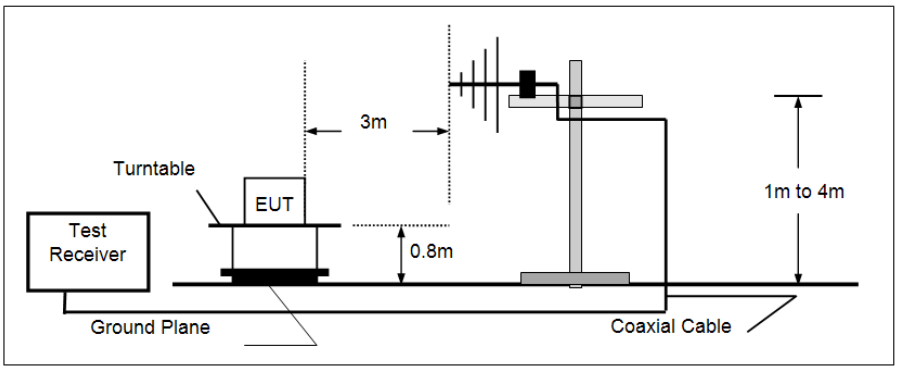

- Above 1 GHz

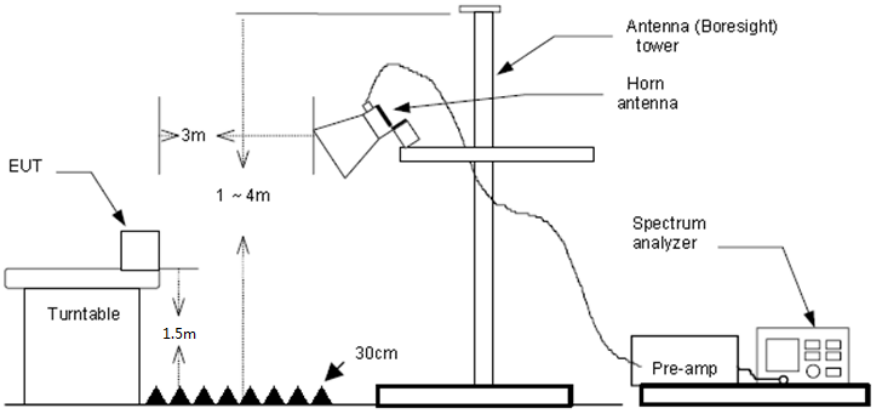

Test Procedure

1. The EUT was setup and tested according to ANSI C63.10:2013 requirements.
2. The EUT is placed on a turn table which is 0.8 meter above ground for below 1 GHz, and 1.5 m for above 1 GHz. The turn table is rotated 360 degrees to determine the position of the maximum emission level.
3. The EUT was set 3 meters from the receiving antenna, which was mounted on the top of a variable height antenna tower. For each suspected emission, the EUT was arranged to its worst case and then tune the Antenna tower (from 1 m to 4 m) and turntable (from 0 degree to 360 degrees) to find the maximum reading. A pre-amp and a high pass filter are used for the test in order to get better signal level to comply with the guidelines.
4. Set to the maximum power setting and enable the EUT transmit continuously.
5. Use the following spectrum analyzer settings
   Span shall wide enough to fully capture the emission being measured;
   (1)Below 1 GHz:
   RBW=120 kHz, VBW=300 kHz, Sweep=auto, Detector function=peak, Trace=max hold;
   If the emission level of the EUT measured by the peak detector is 3 dB lower than the applicable limit, the peak emission level will be reported. Otherwise, the emission measurement will be repeated using the quasi-peak detector and reported.
   (2)From 1 GHz to 10th harmonic:
   RBW=1MHz, VBW=3MHz Peak detector for Peak value.
   RBW=1MHz, VBW=3MHz RMS detector for Average value.

Test Mode:

Please refer to the clause 2.3

Test Results

Radiated Spurious Emissions

- **9 kHz ~ 30 MHz**

  The EUT was pre-scanned the frequency band (9 kHz ~ 30 MHz), found the radiated level lower than the limit, so don't show on the report.

■ **30 MHz ~ 1 GHz**

Ant. Pol.	Horizontal
Test Mode:	2425MHz(Worst case)

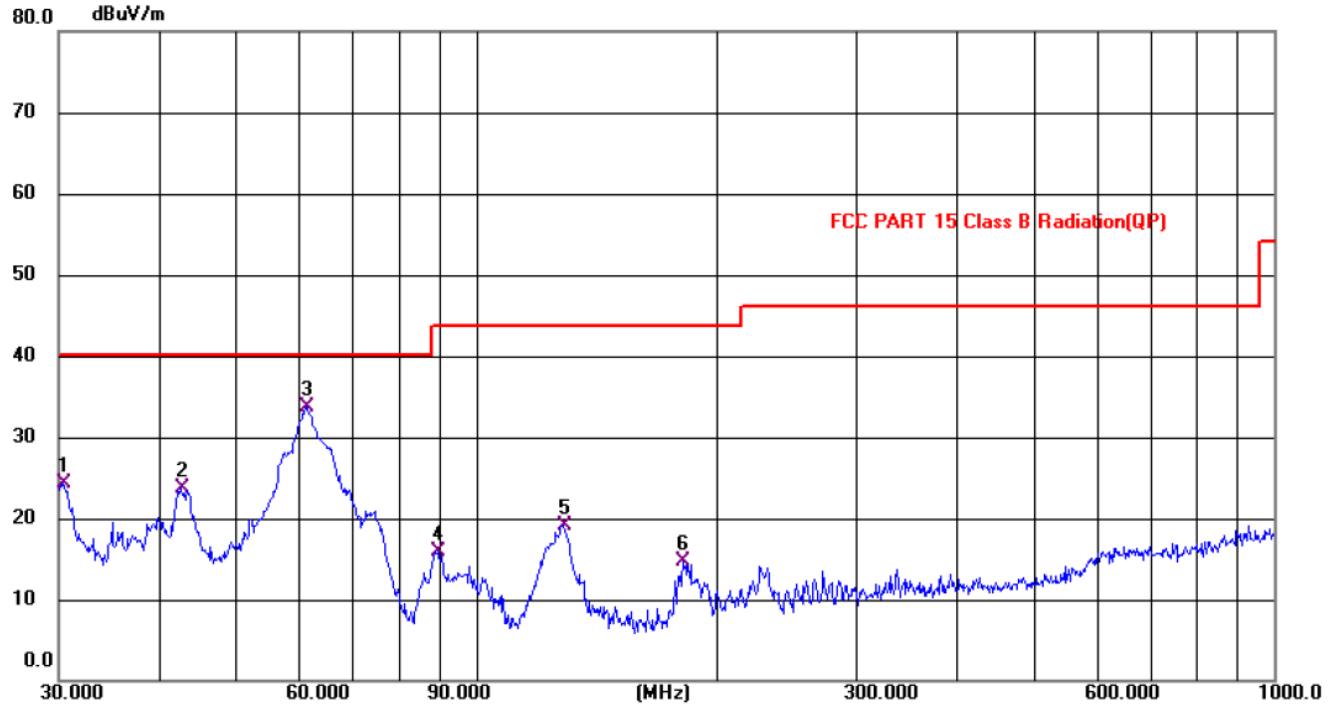

No.	Mk.	Freq.	Reading Level	Correct Factor	Measure-ment	Limit	Over	
		MHz	dBuV	dB	dBuV/m	dBuV/m	dB	Detector
1		30.3173	39.62	-15.38	24.24	40.00	15.76	QP
2		42.7496	40.91	-17.14	23.77	40.00	16.23	QP
3	*	61.1316	47.56	-13.90	33.66	40.00	6.34	QP
4		89.5900	39.66	-23.72	15.94	43.50	27.56	QP
5		128.5630	44.46	-25.27	19.19	43.50	24.31	QP
6		181.9202	38.06	-23.37	14.69	43.50	28.81	QP

Remarks:
1.Factor (dB/m) = Antenna Factor (dB/m)+Cable Factor (dB)-Pre-amplifier Factor
2. Measure Level= Read Level+ Correct Factor
3. Margin = Measure Level-Limit

Ant. Pol.	Vertical
Test Mode:	2425MHz(Worst case)

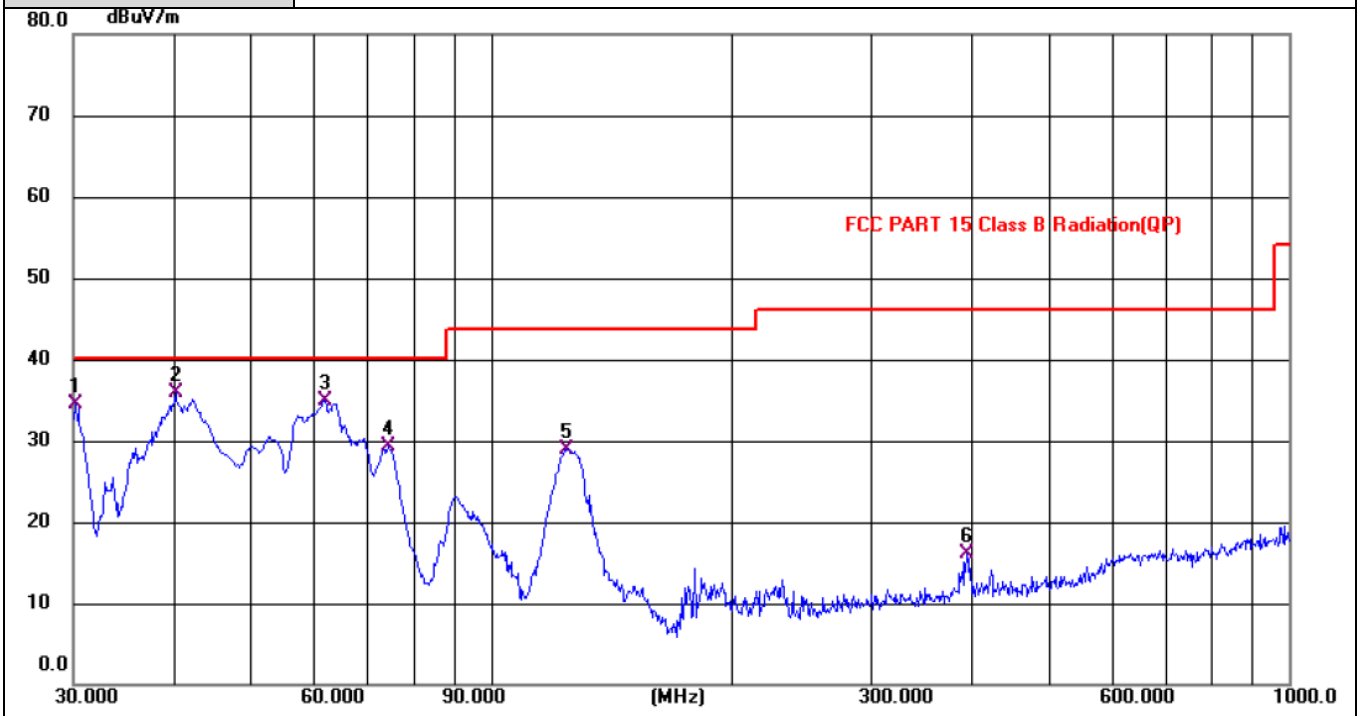

No.	Mk.	Freq.	Reading Level	Correct Factor	Measure-ment	Limit	Over	
		MHz	dBuV	dB	dBuV/m	dBuV/m	dB	Detector
1		30.2111	49.82	-15.40	34.42	40.00	5.58	QP
2	*	40.2757	53.46	-17.50	35.96	40.00	4.04	QP
3		61.7781	49.12	-14.16	34.96	40.00	5.04	QP
4		74.3955	53.88	-24.55	29.33	40.00	10.67	QP
5		124.1330	53.49	-24.50	28.99	43.50	14.51	QP
6		394.8545	34.11	-18.09	16.02	46.00	29.98	QP

Remarks:
1.Factor (dB/m) = Antenna Factor (dB/m)+Cable Factor (dB)-Pre-amplifier Factor
2. Measure Level= Read Level+ Correct Factor
3. Margin = Measure Level-Limit

■ **Above 1 GHz**

Frequency (MHz)	Reading (dBuV)	Correct dB/m	Result (dBuV/m)	Limit (dBuV/m)	Margin (dB)	Polar H/V	Detector
Low Channel-2425MHz							
4810.000	58.4	-4.82	53.58	74	-20.42	H	PK
4810.000	43.13	-4.82	38.31	54	-15.69	H	AV
7215.000	54.54	1.61	56.15	74	-17.85	H	PK
7215.000	40.09	1.61	41.7	54	-12.3	H	AV
4810.000	61.23	-4.82	56.41	74	-17.59	V	PK
4810.000	41.13	-4.82	36.31	54	-17.69	V	AV
7215.000	52.18	1.61	53.79	74	-20.21	V	PK
7215.000	40.33	1.61	41.94	54	-12.06	V	AV
Middle Channel-2435MHz							
4880.000	58.48	-4.87	53.61	74	-20.39	H	PK
4880.000	41.6	-4.87	36.73	54	-17.27	H	AV
7320.000	52.65	1.51	54.16	74	-19.84	H	PK
7320.000	38.62	1.51	40.13	54	-13.87	H	AV
4880.000	58.57	-4.87	53.7	74	-20.3	V	PK
4880.000	41.77	-4.87	36.9	54	-17.1	V	AV
7320.000	55.76	1.51	57.27	74	-16.73	V	PK
7320.000	38.33	1.51	39.84	54	-14.16	V	AV
High Channel-2455MHz							
4950.000	58.99	-4.32	54.67	74	-19.33	H	PK
4950.000	41.89	-4.32	37.57	54	-16.43	H	AV
7435.000	53.48	1.48	54.96	74	-19.04	H	PK
7435.000	37.96	1.48	39.44	54	-14.56	H	AV
4950.000	57.36	-4.32	53.04	74	-20.96	V	PK
4950.000	41.93	-4.32	37.61	54	-16.39	V	AV
7435.000	52.66	1.48	54.14	74	-19.86	V	PK
7435.000	38.76	1.48	40.24	54	-13.76	V	AV

Remarks:
1. Correct (dB/m) = Antenna Factor (dB/m)+Cable Factor (dB)-Pre-amplifier Factor
2. Measure Level= Read Level+ Correct Factor
3. Margin = Measure Level-Limit
4. Testing is carried out with frequency rang 9kHz to the tenth harmonics, which above 3h Harmonics are attenuated more than 20dB below the permissible limits or the field strength is too small to be measured.

Bandedge Emission

Frequenc (MHz)	Reading (dBuV)	Correct dB/m	Result (dBuV/m)	Limit (dBuV/m)	Margin (dB)	Polar H/V	Detector
Low Channel							
2310.000	58.52	-12.9	45.62	74	-28.38	H	PK
2310.000	43.25	-12.9	30.35	54	-23.65	H	AV
2390.000	54.66	-12.34	42.32	74	-31.68	H	PK
2390.000	40.21	-12.34	27.87	54	-26.13	H	AV
2310.000	61.35	-12.9	48.45	74	-25.55	V	PK
2310.000	41.25	-12.9	28.35	54	-25.65	V	AV
2390.000	52.3	-12.34	39.96	74	-34.04	V	PK
2390.000	40.45	-12.34	28.11	54	-25.89	V	AV
High Channel							
2483.500	59.11	-11.98	47.13	74	-26.87	H	PK
2483.500	42.01	-11.98	30.03	54	-23.97	H	AV
2500.000	53.6	-11.48	42.12	74	-31.88	H	PK
2500.000	38.08	-11.48	26.6	54	-27.4	H	AV
2483.500	57.48	-11.98	45.5	74	-28.5	V	PK
2483.500	42.05	-11.98	30.07	54	-23.93	V	AV
2500.000	52.78	-11.48	41.3	74	-32.7	V	PK
2500.000	38.88	-11.48	27.4	54	-26.6	V	AV

Remarks:
1. Correct (dB/m) = Antenna Factor (dB/m)+Cable Factor (dB)-Pre-amplifier Factor
2. Measure Level= Read Level+ Correct Factor
3. Margin = Measure Level-Limit

3.5. Antenna requirement

Requirement

FCC CFR Title 47 Part 15 Subpart C Section 15.203:

An intentional radiator shall be designed to ensure that no antenna other than that furnished by the responsible party shall be used with the device. The use of a permanently attached antenna or of anantenna that uses a unique coupling to the intentional radiator, the manufacturer may design the unit so that a broken antenna can be replaced by the user, but the use of a standard antenna jack or electrical connector is prohibited.

(i) Systems operating in the 2400~2483.5 MHz band that is used exclusively for fixed. Point-to-point operations may employ transmitting antennas with directional gain greater than 6dBi provided the maximum conducted output power of the intentional radiator is reduced by 1 dB for every 3 dB that the directional gain of the antenna exceeds 6dBi.

Test Result

This product has a PCB antenna, fulfill the requirement of this section.

**********THE END**********