Step 11

Power on your Toast Flex

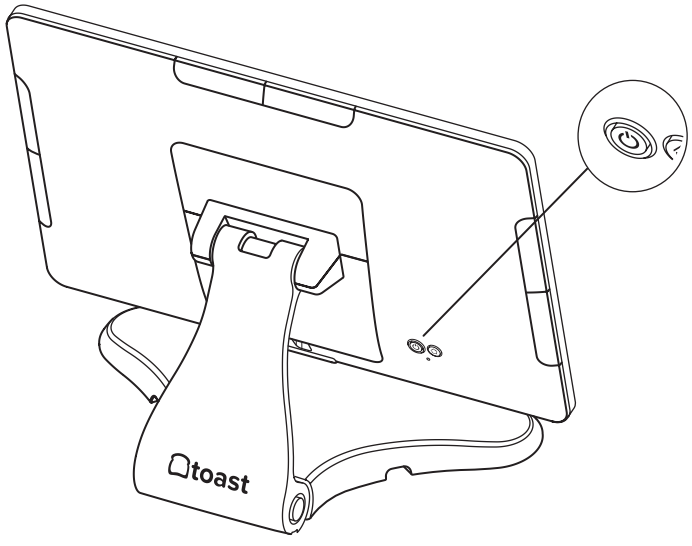

Step 12

Follow Toast setup instructions

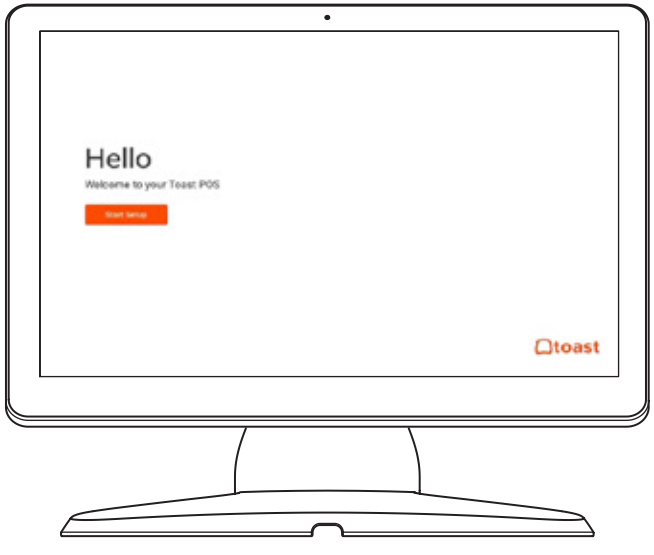

Toast Flex + Toast Printer

FINAL STEPS

11. Power on the Toast Flex terminal and follow the Toast setup instructions that appear. (See images on the left)

12. Log into your restaurant in the Toast App and complete basic setup.

> **NOTE**
> You may need to update the Toast App when you open it for the first time.

13. The last step is to turn on EMV. EMV must be turned on to accept payment on your new Toast system. **See page 13 for EMV set up instructions.**

Your Toast Flex + Toast Printer are set up!

> **TIP**
> Your new Toast Flex stand can be raised higher or lower!

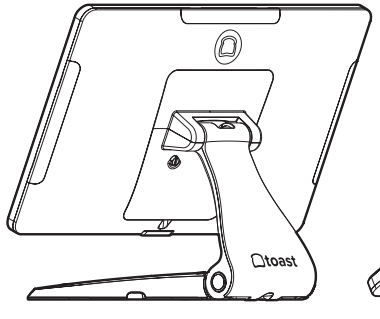

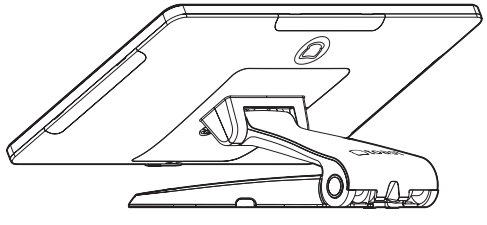

Cabling Diagram

Toast Flex + Toast Hub

Use the cabling diagram as a guide for how your system will be wired when it's all set up.

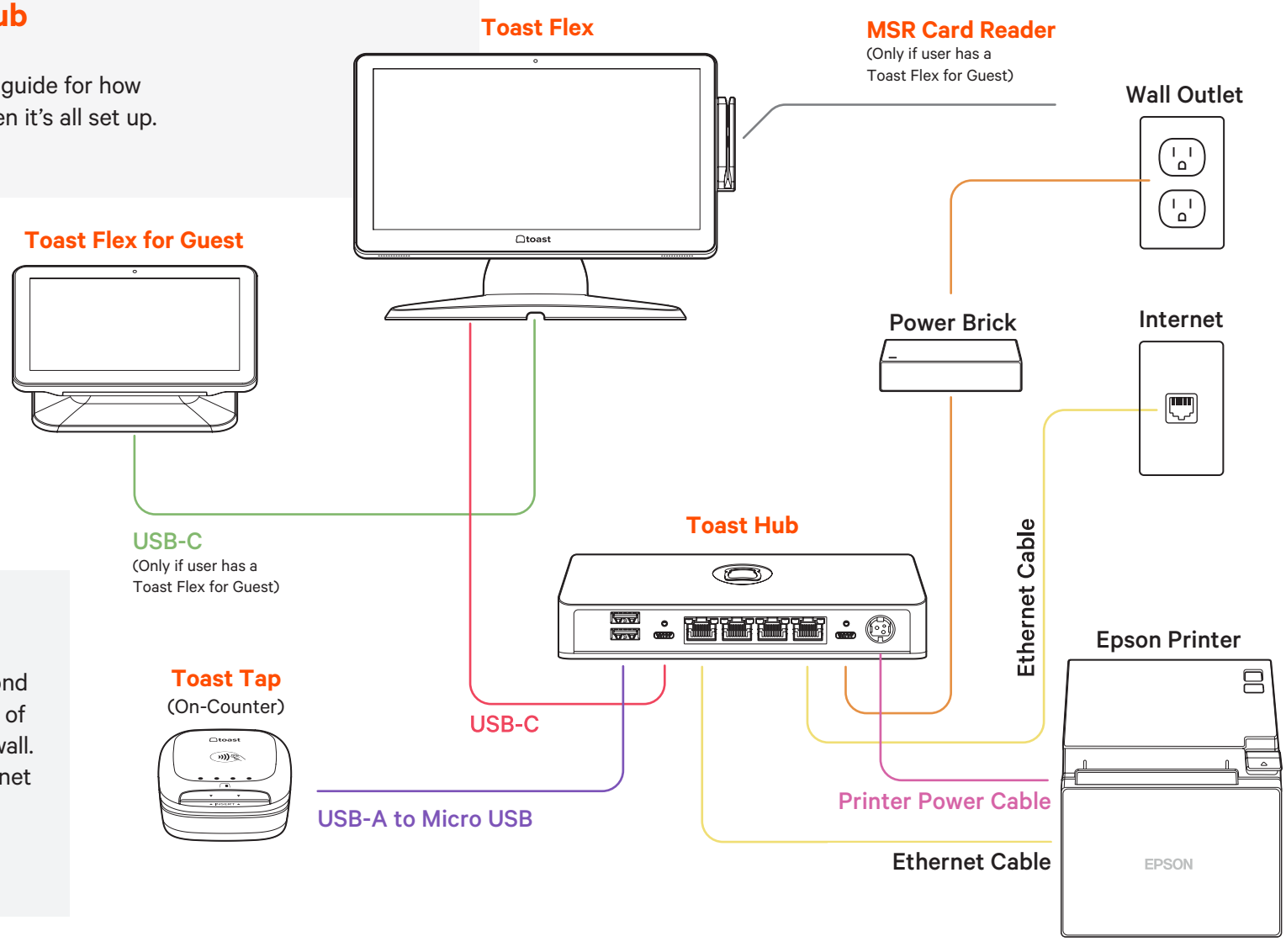

NOTE

If you have a second terminal, connect the second power brick from the base of the terminal stand to the wall. Connect the second ethernet cable from the Toast Hub to the base of the terminal stand.

! If you are using direct attachment for Toast Flex for Guest, this is already in place on the Toast Flex terminal.

! For a full service restaurant, you will have the Toast Tap (Direct Attach to Toast Flex) already in place instead of a Toast Tap (On-Counter).

Toast Flex + Toast Hub

1. **Unpack your hardware:**

   → Unpack the Epson Printer box first.

   → Unpack the Toast Hub box. This box contains three cables:
   - Ethernet Cable (Yellow)
   - USB-C - USB-C Cable (One end is red and one end is orange)
   - Epson Power Cable (Pink with black stripes)

   → Unpack your Toast Flex terminal and place it on the counter. This box has two smaller boxes inside: An orange box and a yellow box.

2. Next, remove the orange box labeled "**Power.**" This box contains the power adapter. Plug it into the orange port labeled "**Power In**" on the **Toast Hub**. Use the thumb screw to secure it. Ensure the thumbscrew is tight to avoid connectivity issues.

3. Then, place the other end near the wall outlet, but don't plug it into the outlet yet. Placing it near the outlet now will help you know where you want to coil or hide your cables at the end of installation.

4. Next, plug the yellow ethernet cable that was packed in the Toast Hub box and connect it from the Epson printer to the yellow port labeled "**Printer**" on the **Toast Hub**.

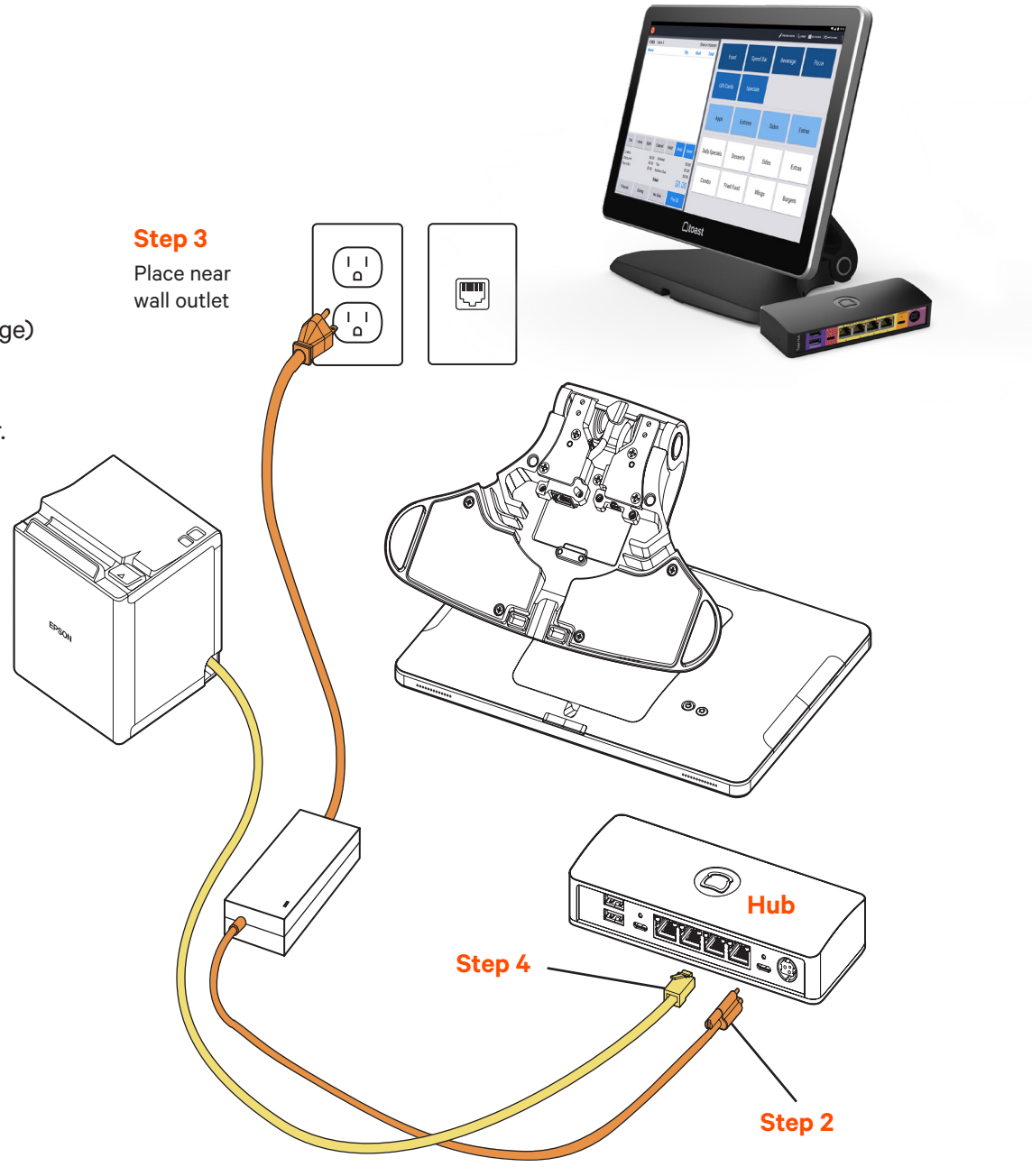

Toast Flex + Toast Hub CONTINUED

5. Remove the yellow box labeled "**Connect.**" This box contains two ethernet cables. One is 3 ft and one is 7 ft. Choose the cord length that best suits your restaurant and connect it from the wall to the yellow port labeled "**Printer**" on the **Toast Hub**.

6. Plug the striped pink Epson power cable from the Epson printer to the striped pink port labeled "**Printer In**" on the Toast Hub.

7. Take the orange end of the USB-C cable and plug it into the orange port in the base of the Toast Flex terminal. Use the thumb screw to secure it.

8. Take the red end of the USB-C cable and plug it into the red port labeled "**To Stand**" on the **Toast Hub**. Use the thumb screw to secure it. This cable sends both data and power to your Toast Flex terminal.

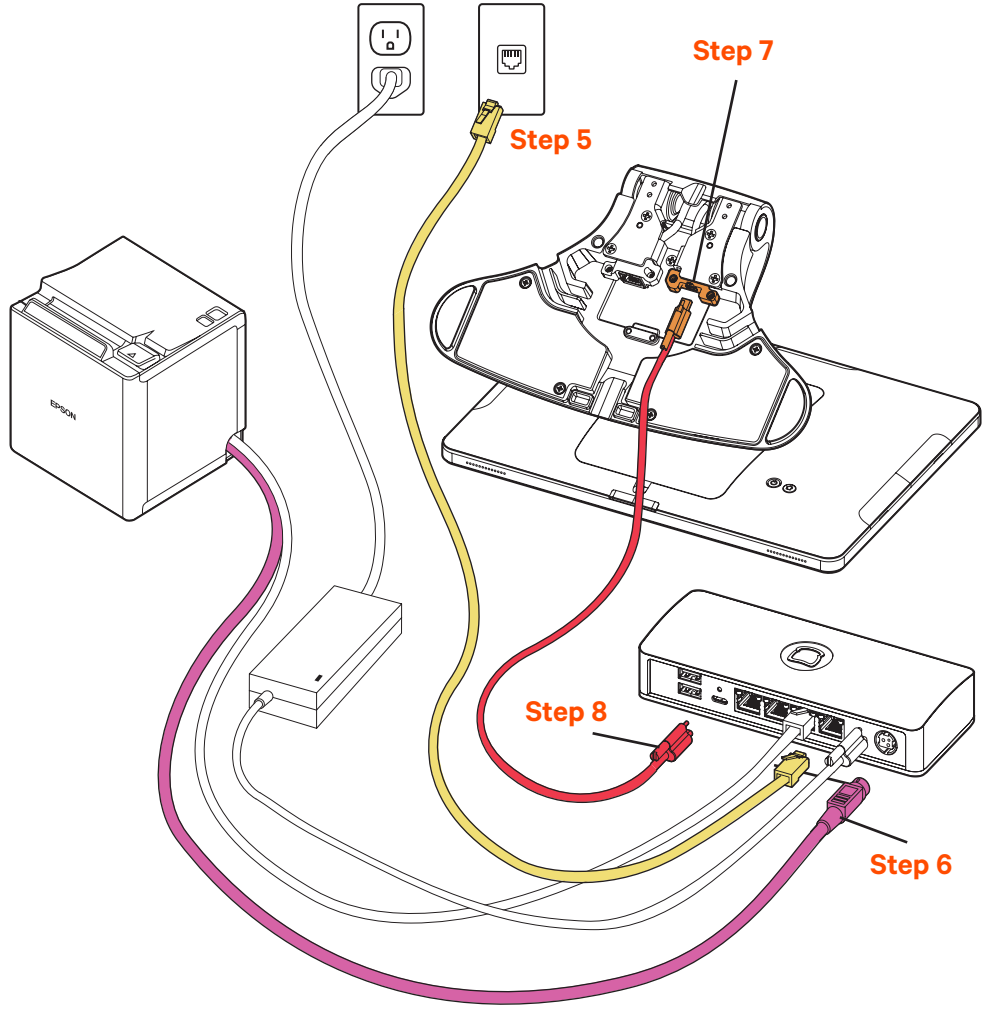

Toast Flex + Toast Hub CONTINUED

9 If you have a cash drawer, plug in the cash drawer cable, which is grey with blue dots, from your cash drawer to the printer.

10 If you have a wedge mount Toast Flex for Guest, plug the green USB-C cable into the green port labeled “GFD” on the Toast Flex terminal stand.

TIP
You can coil extra cable under the Toast Flex for Guest connector bay.

NOTE
If you are using the direct attachment for Toast Flex for Guest, this is already in place on the Toast Flex terminal. (See image on the right)

Direct Attach

11 Set up payment using one of the options below:

A If you are attaching your Toast Tap (On-Counter) to the Toast Flex, open the purple box labeled “**Payments.**” This box contains your Toast Tap (On-Counter). Follow the instructions in the printed guide for **Micro USB to Micro USB**.

B If you have Toast Tap (Direct Attach to Toast Flex), this will already be adhered to your Toast Flex terminal.

Step 9

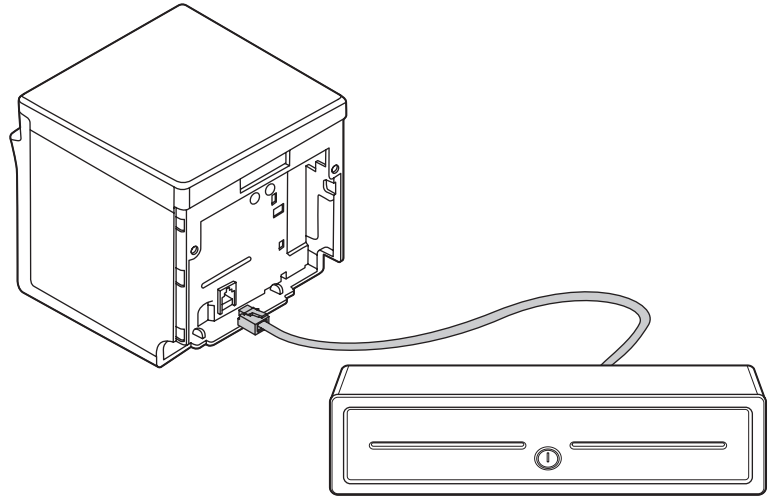

Step 10

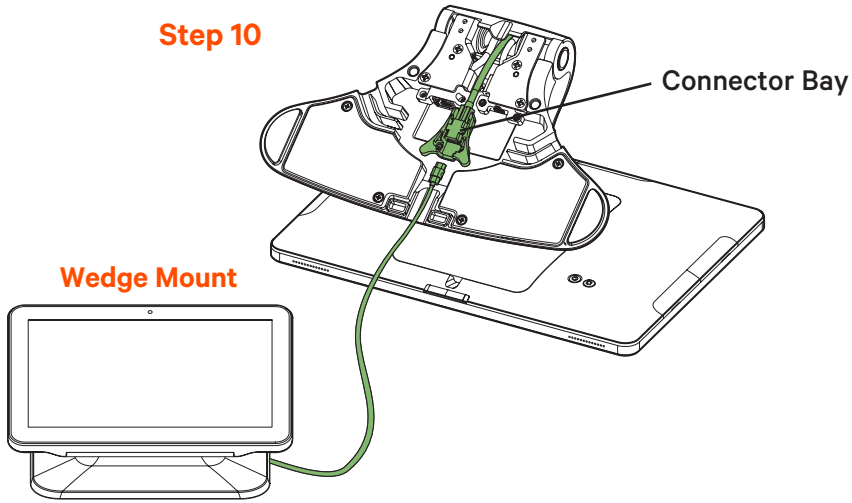

Toast Flex + Toast Hub

FINAL STEPS

12. Now, plug in the orange power cord into the wall outlet. (From Step 3)

13. Power on the Toast Flex terminal and follow the Toast setup instructions that appear. (See images on the right.)

14. Log into your restaurant in the Toast App and complete basic setup.

15. The last step is to turn on EMV. EMV must be turned on to accept payment on your new Toast system. **See page 13 for EMV set up instructions.**

Your Toast Flex + Toast Hub are set up!

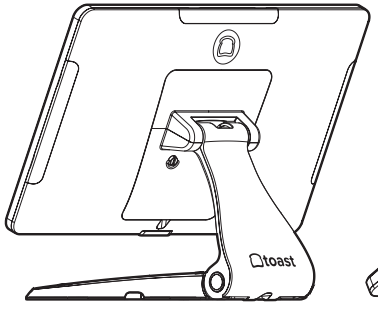

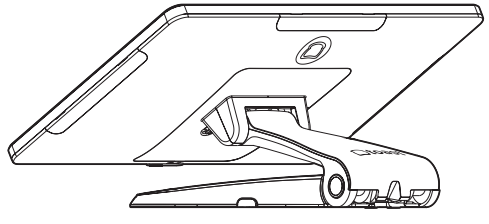

TIP
Your new Toast Flex stand can be raised higher or lower!

Step 13

Power on your Toast Flex

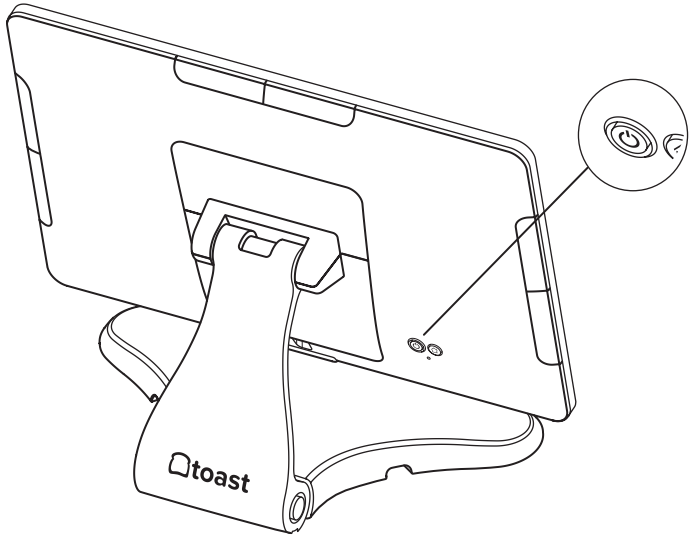

Step 14

Follow Toast setup instructions

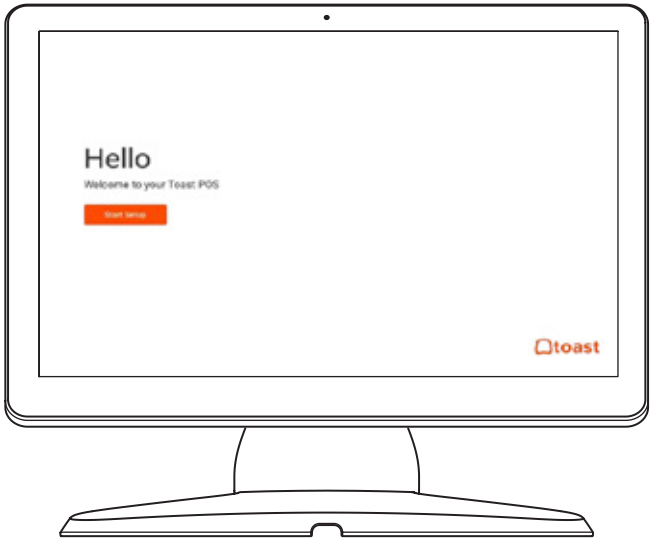

Configuring EMV for your Toast System in the Toast App

Your Toast system is EMV capable.
EMV is a credit card payment process that checks cards embedded with a computer chip for their legitimacy. Enabling EMV will allow for dipping and tapping of credit cards on the Toast Tap.

1

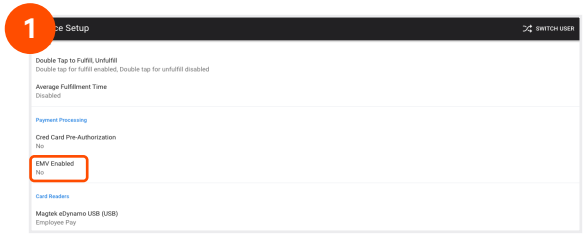

Using the Toast icon in the upper left corner of the screen on your Toast Flex, navigate to the **Setup** menu and select **Device Setup**. Scroll to the **Payment Processing** section and select **EMV Enabled**.

2

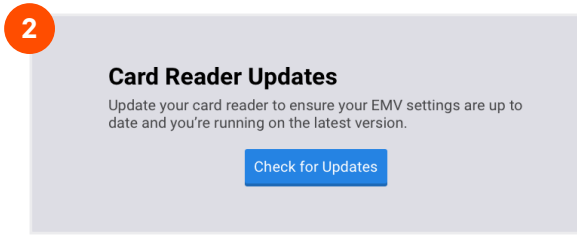

Select **Check for Updates** to look for updates to your card reader. If you do not see an update, skip to the last step.

3

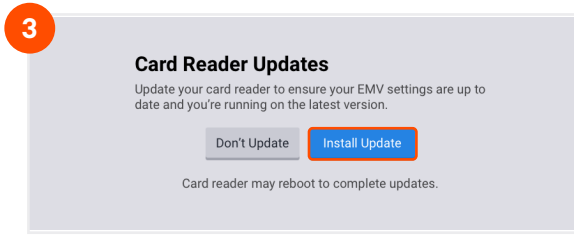

Select **Install Updates**. The update normally takes a few minutes to complete. If you decline the update, you will not be able to use EMV until this update is installed.

4

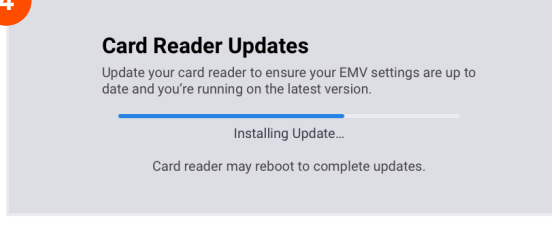

You'll see the screen below as the update processes. If you get an error message, please try again in a few minutes.
Make sure to not let your session log out.

5

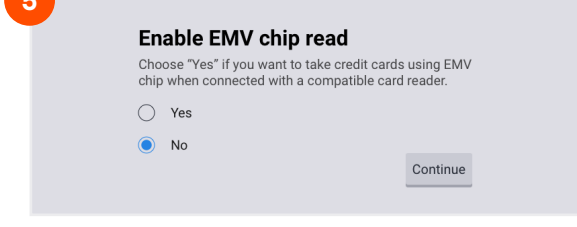

If the update was successful, you'll see this next screen. Toggle the switch to Yes, and you're all set!

Toast Flex

1. Unpack the Toast Flex terminal and place the terminal on your counter.

2. Remove the yellow box labeled "**Connect.**" This box contains two yellow ethernet cables. One cord is 3 ft and one is 7 ft. Choose the cord length that best suits your restaurant and connect it from the wall to the yellow port labeled "**Internet IN**" on the base of the Toast Flex terminal stand.

3. Remove the orange power box labeled "**Power.**" Plug in the power cord from the wall into the orange port located at the base of the Toast Flex terminal stand. Use the **thumb screw** to secure it. Ensure the thumbscrew is tight to avoid connectivity issues.

4. Set up payment using one of the options below:

   A. If you are attaching your Toast Tap (On-Counter) to the Toast Flex, open the purple box labeled "**Payments.**" This box contains your Toast Tap (On-Counter). Follow the instructions in the printed guide for **Micro USB to Micro USB**.

   B. If you have Toast Tap (Direct Attach to Toast Flex), this will already be adhered to your Toast Flex terminal.

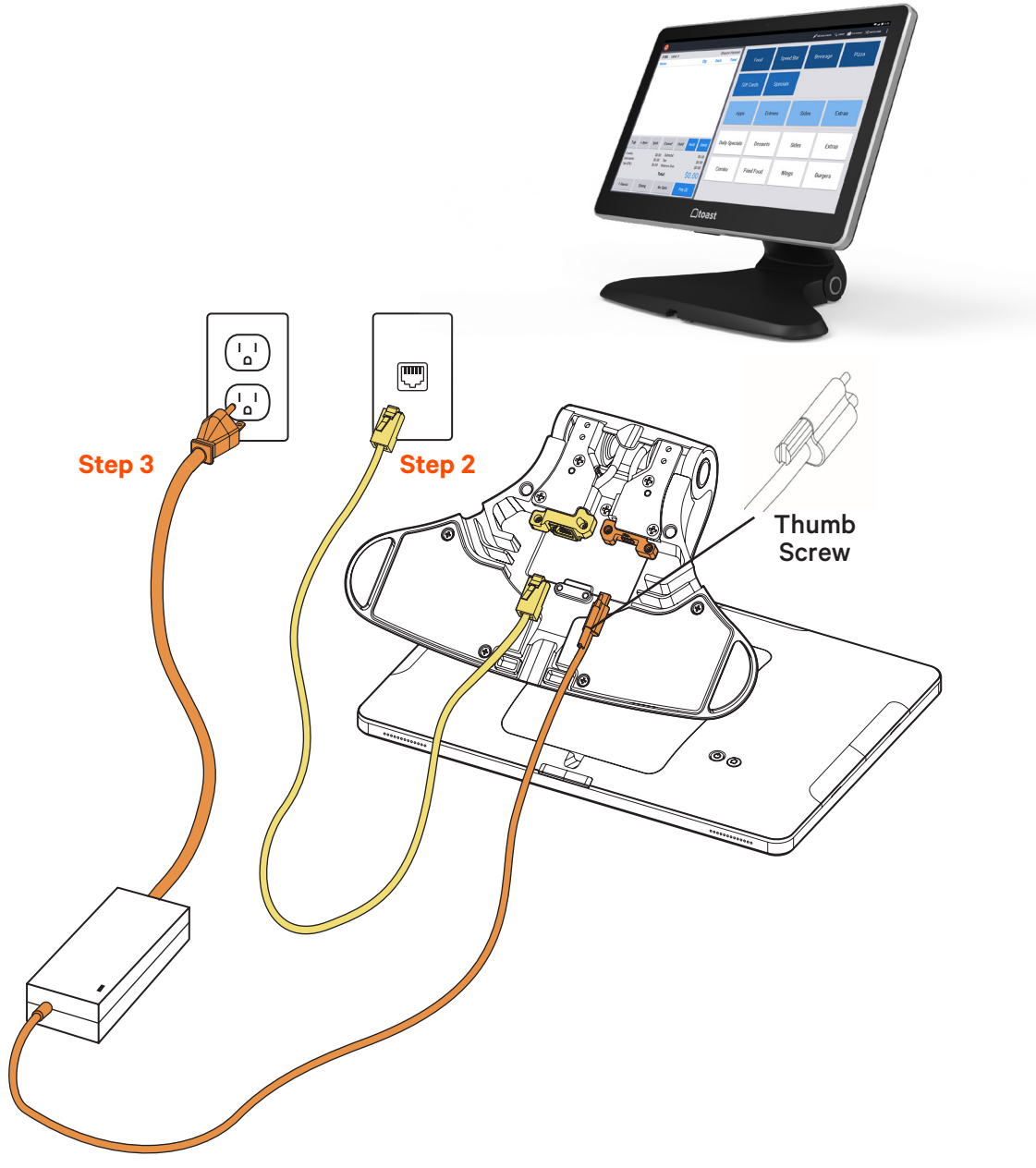

Toast Flex CONTINUED

5. Power on the Toast Flex and follow the Toast setup instructions that appear on the screen.

6. Log into your restaurant in the Toast App and complete basic setup. Note: You may need to update the Toast App when you open it for the first time.

NOTE
You may need to update the Toast App when you open it for the first time.

Your Toast Flex terminal is set up!

TIP
Your new Toast Flex stand can be raised higher or lower!

Step 5

Power on your Toast Flex

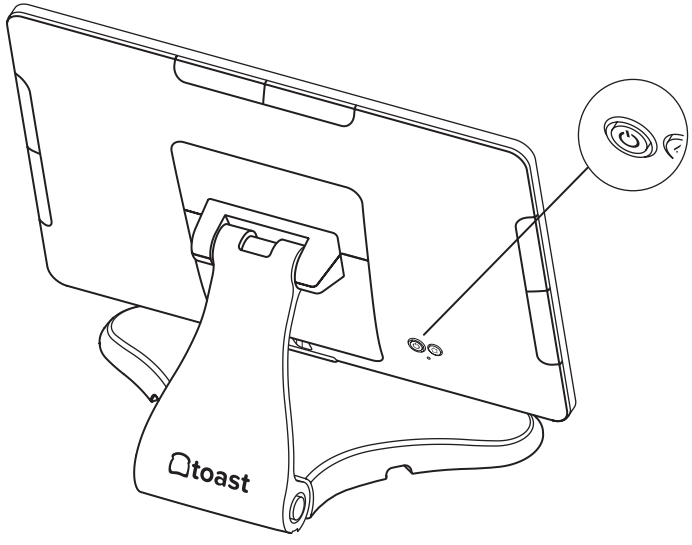

Step 6

Follow Toast setup instructions

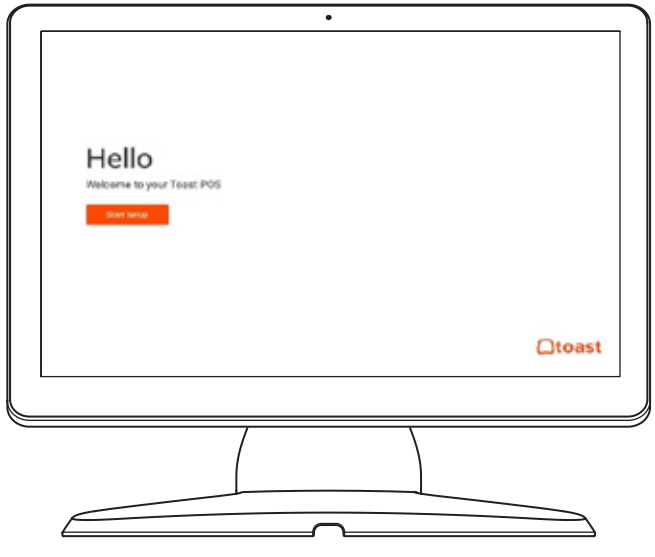

Toast Flex for Kitchen ON-STAND

Follow these instructions if the Toast Flex for Kitchen will be on-stand

Before you get started, identify where you want your Toast Flex for Kitchen to be located. Make sure there is a power outlet and wall port in reach.

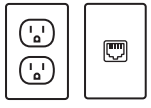

1. Unpack your Toast Flex for Kitchen terminal and place it on your counter.

2. Remove the yellow box labeled "**Connect.**" This box contains two yellow ethernet cables. One cord is 3 ft and one is 7 ft. Choose the cord length that best suits your restaurant and connect it from the wall to the yellow port labeled "**Internet IN**" on the base of the terminal stand.

3. Remove the orange power box labeled "**Power.**" Plug in the power adapter from the wall into the orange port located at the base of the Toast Flex terminal stand. Use the thumb screw to secure it.

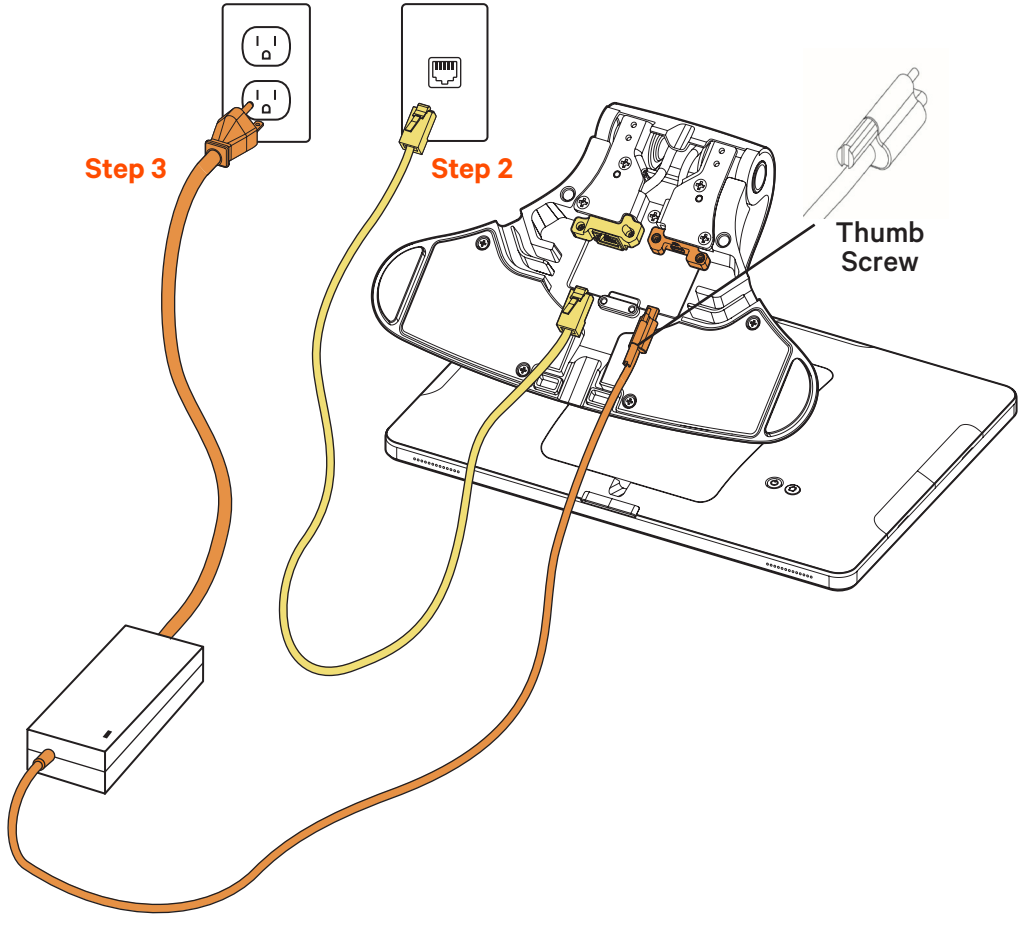

If you are using a wall mount for your Toast Flex for Kitchen, go to the next page!

Toast Flex for Kitchen MOUNTED

Follow these instructions if the Toast Flex for Kitchen will be mounted on the wall

Before you get started, identify where you want your Toast Flex for Kitchen to be located. Make sure there is a power outlet and wall port in reach.

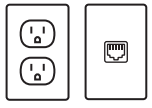

1. Unpack your Toast Flex for Kitchen and Wall Mount:
   - It will have the swing arm for the wall mount already attached.
   - It will also have the power cable and internet cable pre-plugged into your Toast Flex for Kitchen.
2. Plug the other end of the internet cable into the wall port.
3. Attach your wall mount to the wall. (See note below.)
4. Plug the other end of the power cable into the wall outlet.

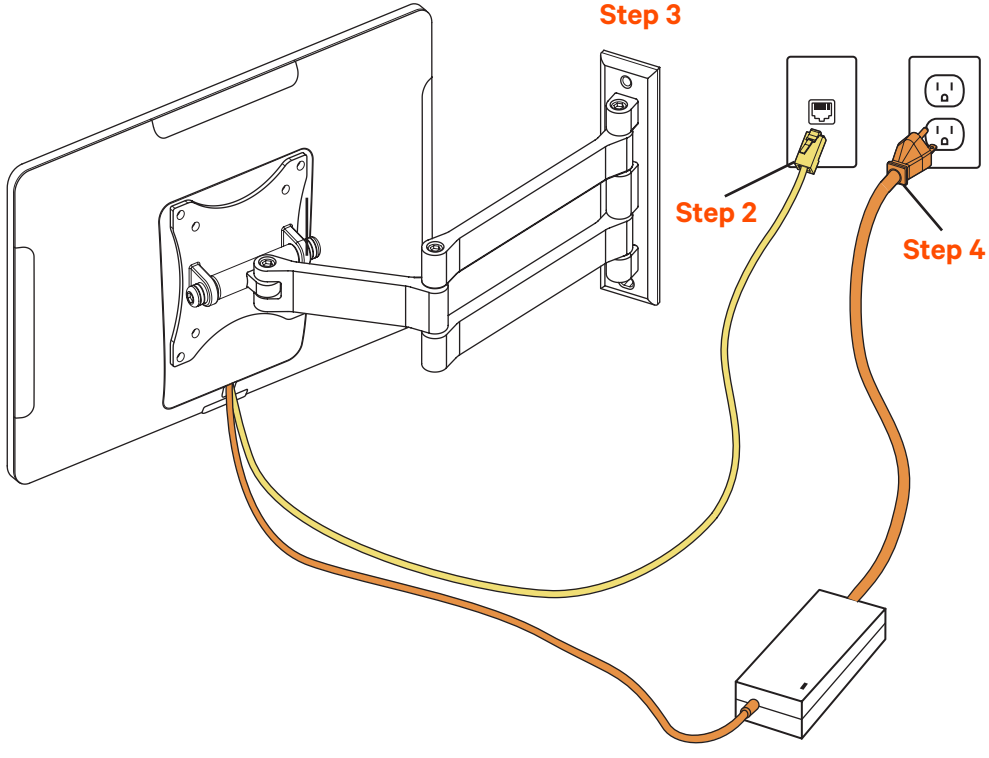

! Toast does not drill holes. You will need to drill your own holes or have holes pre-drilled in the desired location.

User Manual

Product Name: Data Processing Machine

- 14” Toast Flex - Model Name: **TT200/TT200W, TT202/TT202W, TT203/TT203W**
- 14” Toast Flex for Guest (Direct Attach) - Model Name: **TT201/TT201W, TT204/TT204W**
- 8” Toast Flex for Guest (On Counter) - Model Name: **TW200/TW200W/TW300**
- 14” Toast Flex for Kitchen - Model Name: **TK200/TK300**
- Toast Hub - Model Name: **TH200**

Specifications: Toast Flex

Operation System	Android 7.1
Processor	Rockchip ROK3399
LCD	14-inch, 1920 x 1080 resolution
Memory	16GB ROM + 4GB RAM
WIFI	Dual-band WIFI, 802.11 a/b/g/n (2.4GHz/5GHz) supported
Bluetooth	Bluetooth 4.0 BLE supported
Camera	5M FF MIPI Camera
Speaker	2W
External Ports	1 x RJ45 LAN port, 2x USB TypeC port, 1x HDMI-D port,
	1x customized TypeC port, 3x Micro-USB port
Power Adapter	Input: AC 100 24OV/2.5A Output: DC 24 V/4, OA

Toast Flex for Guest

LCD	8-inch, 1280 x 800 resolution
Camera	5M FF USB Camera
External Ports	1x Customized USB TypeC port, 2 x Micro-USB Port

Simplified Setting

It only takes a few steps to turn on this Toast Flex. Press the power button and the screen will light up. Follow the instructions shown on the start-up screen. Two internet access modes are available for you to select.

Wi-Fi Setting

1. Press the [Setting] button and start WLAN to enter the WLAN search interface.
2. Search for the available WLAN hotspots.
3. Press the WLAN to be connected. If an encrypted network is selected, a password is required for connection.

Precautions

Warning:

- Please insert the AC plug into the AC outlet according to the identifying input on the power adapter.
- It is prohibited to use the device in any places with potential explosive gases.
- Nonprofessionals should not open the power adapter to avoid danger.
- Adapter should be installed near the equipment and be easily accessible.
- The operating temperature of the device is between -10°C to 40°C.

Recommendation:

- Do not use the device near water or in a humid environment.
- Keep liquid from falling on the Toast Flex.
- Do not use the device in extremely cold or hot environments, e.g. around fire or a lighted cigarette.
- Do not smash, throw, or bend the device.
- Use the device in a clean and dust free environment as much as possible and keep small items from falling into the Toast Flex.

Important Safety Instructions

- Avoid installing or using during thunder and lightning; lightning strike may occur.
- Cut off the power immediately if there is abnormal smell, overheating, or smog.

Statement

The company is not responsible for the following behaviors:

- Damage caused by using and maintaining the device without following the User Manual.
- Damage or problems caused by selection of objects of consumables (products which are not the initial ones

provided or recognized by the company).

In this case, the company will not undertake any responsibility. No one is entitled to modify or change the product unless permitted by the company.

Statement

Discrepancies between the product and the file concerning details may occur due to product updates. The company reserves the right to interpret the file and the right to revise this manual without prior notice.

- Please make sure the temperature for adapter is between -10°C to 40°C.
- Please make sure the temperature for device is between -10°C to 40°C.

FCC Regulations

This device complies with part 15 of the FCC Rules. Operation is subject to the following two conditions: (1) This device may not cause harmful interference, and (2) this device must accept any interference received, including interference that may cause undesired operation.

This device has been tested and found to comply with the limits for a Class B digital device, pursuant to Part 15 of the FCC Rules. These limits are designed to provide reasonable protection against harmful interference in a residential installation. This equipment generates, uses, and can radiate radio frequency energy and, if not installed and used in accordance with the instructions, may cause harmful interference to radio communications. However, there is no guarantee that interference will not occur in a particular installation. If this equipment does cause harmful interference to radio or television reception, which can be determined by turning the equipment off and on, the user is encouraged to try to correct the interference by one or more of the following measures:

- Reorient or relocate the receiving antenna.
- Increase the separation between the equipment and receiver.
- Connect the equipment into an outlet or a circuit different from that to which the receiver is connected.
- Consult the dealer or an experienced radio/TV technician for help.

To comply with RF exposure requirements, a minimum separation distance of 20cm must be maintained between the user's body and the POS machine, including the antenna. Caution: Changes or modifications not expressly approved by the party responsible for compliance could void the user's authority to operate the equipment.

FCC ID: 2AMNG-TT200B

IC Regulations

This device complies with Industry Canada licence-exempt RSS standard(s).
Operation is subject to the following two conditions:
(1)this device may not cause harmful interference, and
(2)this device must accept any interference received, including interference that may cause undesired operation.
Le présent appareil est conforme aux CNR d'Industrie Canada applicables aux appareils radio exempts de licence. L'exploitation est autorisée aux deux conditions suivantes:
(1)l'appareil ne doit pas produire de brouillage, et
(2)'utilisateur de l'appareil doit accepter tout brouillage radioélectrique subi, même si le brouillage est susceptible d'en compromettre le fonctionnement.
CAUTION
(i) the device for operation in the band 5150-5250 MHz is only for indoor use to reduce the potential for harmful interference to co-channel mobile satellite systems;
(ii) high-power radars are allocated as primary users (i.e. priority users) of the bands 5650-5850 MHz and tha t these radars could cause interference and/or damage to LE-LAN devices.
AVERTISSEMENT:
(i) les dispositifs fonctionnant dans la bande 5 150-5 250 MHz sont réservés uniquement pour une utilisation à l'intérieur afin de réduire les risques de brouillage préjudiciable aux systèmes de satellites mobiles utilisant les mêmes canaux;
(ii) les utilisateurs de radars de haute puissance sont désignés utilisateurs principaux (c.-à-d., qu'ils ont la priorité) pour les bandes 5650-5 850 MHz et que ces radars pourraient causer du brouillage et/ou des dommages aux dispositifs LAN-EL

Radio frequency (RF) Exposure Information The radiated output power of the Wireless Device is below the industry Canada(IC) radio frequency exposure limits. The Wireless Device should be used in such a manner such that the potential for human contact during normal operation is minimized. The device has also been evaluated and shown compliant with the IC RF Exposure limits under mobile exposure conditions. (antennas at least 20cm from a person's body)
informations sur l'exposition de radiofréquences (rf) la puissance de rayonnement de l'appareil sans fil est inférieure à la fréquence radio d'industrie canada (ic) limites d'exposition.l'appareil sans fil devrait être utilisé de façon telle que le potentiel de contact pendant le fonctionnement normal est réduit au minimum. le dispositif a été évalué et qui semble conforme à l'ic des limites d'exposition aux rf sous des conditions d'exposition mobile. (antennes d'au moins 20 cm du corps d'une personne)

IC: 23177-TT200B

Need Help With Troubleshooting?

Contact Toast Support for any issues that may arise.

Meet Your Success Team

We have teams of experts to support your restaurant and ensure you and your staff can focus on delighting your guests.

toast Support

Support is your first line of defense for all Toast questions. Our Support team is available 24/7/365 and is trained to either help or route your request to the correct team at Toast.

- Call (617) 682-0225
- Chat with an agent online on Toast Central
- Submit a ticket on Toast Central

toast Restaurant Success

The goal of Restaurant Success is to make sure you see the value of your new POS. Whether it's making sure that you're using all that Toast has to offer, to answering questions about new Toast updates, to helping you optimize your technology.

- Restaurant Success will contact you directly once you're live with Toast!

Check Out Your Resources

Whether you're looking to master Toast or you're just getting started, we've got you covered!

> "Toast University looks great! I'd love to have all of my new hires take all of the tests and then, upon successful completion, give them a raise."
>
> **MARTIN, TASTE OF PHILLY**

toast University

Toast University is a free virtual training tool available to all customers and their employees. The guided courses will help you train and ensure you get the most out of your Toast POS.

- Sign in through central.toasttab.com

toast Central

Toast Central is a simple, searchable online portal to find all your resources. Use our knowledge base to get answers to your top questions and learn more about how to use Toast POS.

- Visit central.toasttab.com