Prüfbericht-Nr.: *Test report no.:*	CN257B28 001	**Auftrags-Nr.:** *Order no.:*	48251419	Seite 1 von 30 *Page 1 of 30*
Kunden-Referenz-Nr.: *Client reference no.:*	N/A	**Auftragsdatum:** *Order date:*	2024-08-23	
Auftraggeber: *Client:*	Toast, Incorportated 333 Summer Street, Boston, MA 02210 United States Of America			
Prüfgegenstand: *Test item:*	Toast Terminal			
Bezeichnung / Typ-Nr.: *Identification / Type no.:*	TT300			
Auftrags-Inhalt: *Order content:*	FCC Part 15C Test report (BLE)			
Prüfgrundlage: *Test specification:*	FCC 47CFR Part 15: Subpart C Section 15.247			
Wareneingangsdatum: *Date of sample receipt:*	2024-10-07			
Prüfmuster-Nr.: *Test sample no:*	A003831983-001 A003858647-001			
Prüfzeitraum: *Testing period:*	2024-10-11 - 2025-02-06			
Ort der Prüfung: *Place of testing:*	EMC/RF Taipei Testing Site			
Prüflaboratorium: *Testing laboratory:*	Taipei Testing Laboratories			
Prüfergebnis*: *Test result*:*	Pass			

zusammengestellt von: *compiled by:*		**genehmigt von:** authorized by:	
Datum: *Date:* 2025-02-06	David Huang	**Ausstellungsdatum:** *Issue date:* 2025-02-06	Brenda Chen
Stellung / *Position:*	Project Manager	**Stellung** / *Position:*	Senior Project Manager

Sonstiges / *Other:*

Zustand des Prüfgegenstandes bei Anlieferung: Prüfmuster vollständig und unbeschädigt
Condition of the test item at delivery: *Test item complete and undamaged*

* Legende:	1 = sehr gut	2 = gut	3 = befriedigend	4 = ausreichend	5 = mangelhaft
	P(ass) = entspricht o.g. Prüfgrundlage(n)		F(ail) = entspricht nicht o.g. Prüfgrundlage(n)	N/A = nicht anwendbar	N/T = nicht getestet
** Legend:*	*1 = very good*	*2 = good*	*3 = satisfactory*	*4 = sufficient*	*5 = poor*
	P(ass) = passed a.m. test specification(s)		*F(ail) = failed a.m. test specification(s)*	*N/A = not applicable*	*N/T = not tested*

Dieser Prüfbericht bezieht sich nur auf das o.g. Prüfmuster und darf ohne Genehmigung der Prüfstelle nicht auszugsweise vervielfältigt werden. Dieser Bericht berechtigt nicht zur Verwendung eines Prüfzeichens.
This test report only relates to the a. m. test sample. Without permission of the test center this test report is not permitted to be duplicated in extracts. This test report does not entitle to carry any test mark.

Anmerkungen
Remarks

1	Alle eingesetzten Prüfmittel waren zum angegebenen Prüfzeitraum gemäß eines festgelegten Kalibrierungsprogramms unseres Prüfhauses kalibriert. Sie entsprechen den in den Prüfprogrammen hinterlegten Anforderungen. Die Rückverfolgbarkeit der eingesetzten Prüfmittel ist durch die Einhaltung der Regelungen unseres Managementsystems gegeben. Detaillierte Informationen bezüglich Prüfkonditionen, Prüfequipment und Messunsicherheiten sind im Prüflabor vorhanden und können auf Wunsch bereitgestellt werden. *The equipment used during the specified testing period was calibrated according to our test laboratory calibration program. The equipment fulfils the requirements included in the relevant standards. The traceability of the test equipment used is ensured by compliance with the regulations of our management system.* *Detailed information regarding test conditions, equipment and measurement uncertainty is available in the test laboratory and could be provided on request.*
2	Wie vertraglich vereinbart, wurde dieses Dokument nur digital unterzeichnet. Der TÜV Rheinland hat nicht überprüft, welche rechtlichen oder sonstigen diesbezüglichen Anforderungen für dieses Dokument gelten. Diese Überprüfung liegt in der Verantwortung des Benutzers dieses Dokuments. Auf Verlangen des Kunden kann der TÜV Rheinland die Gültigkeit der digitalen Signatur durch ein gesondertes Dokument bestätigen. Diese Anfrage ist an unseren Vertrieb zu richten. Eine Umweltgebühr für einen solchen zusätzlichen Service wird erhoben. Informationen zur Verifizierung der Authentizität unserer Dokumente erhalten Sie auf folgender Webseite: go.tuv.com/digital-signature *As contractually agreed, this document has been signed digitally only. TUV Rheinland has not verified and unable to verify which legal or other pertaining requirements are applicable for this document. Such verification is within the responsibility of the user of this document. Upon request by its client, TUV Rheinland can confirm the validity of the digital signature by a separate document. Such request shall be addressed to our Sales department. An environmental fee for such additional service will be charged. For information on verifying the authenticity of our documents, please visit the following website: go.tuv.com/digital-signature*
3	Prüfklausel mit der Note * wurden an qualifizierte Unterauftragnehmer vergeben und sind unter der jeweiligen Prüfklausel des Berichts beschrieben. Abweichungen von Prüfspezifikation(en) oder Kundenanforderungen sind in der jeweiligen Prüfklausel im Bericht aufgeführt. *Test clauses with remark of * are subcontracted to qualified subcontractors and descripted under the respective test clause in the report.* *Deviations of testing specification(s) or customer requirements are listed in specific test clause in the report.*
4	Die Entscheidungsregel für Konformitätserklärungen basierend auf numerischen Messergebnisen in diesem Prüfbericht basiert auf der "Null-Grenzwert-Regel" und der "Einfachen Akzeptanz" gemäß ILAC G8:2019 und IEC Guide 115:2021, es sei denn, in der auf Seite 1 dieses Berichts genannten angewandten Norm ist etwas anderes festgelegt oder vom Kunden gewünscht. Dies bedeutet, dass die Messunsicherheit nicht berücksichtigt wird und daher auch nicht im Prüfbericht angegeben wird. Zu weiteren Informationen bezueglich des Risikos durch diese Entscheidungsregel siehe ILAC G8:2019. *The decision rule for statements of conformity, based on numerical measurement results, in this test report is based on the "Zero Guard Band Rule" and "Simple Acceptance" in accordance with ILAC G8:2019 and IEC Guide 115:2021, unless otherwise specified in the applied standard mentioned on Page 1 of this report or requested by the customer. This means that measurement uncertainty is not taken in account and hence also not declared in the test report. For additional information to the resulting risk based of this decision rule please refer to ILAC G8:2019.*

TEST SUMMARY

Report Section	FCC Clause	Test Item	Result
5.1.1	15.247(b) & 15.203	Antenna Requirement	Pass
5.1.2	15.247(b)(3)	Peak Output Power	Pass
5.1.3	15.247(a)(2)	6 dB Bandwidth	Pass
5.1.3	2.1049	99% Occupied Bandwidth	Pass
5.1.4	15.247(e)	Power Spectral Density	Pass
5.1.5	15.247(d)	Conducted Spurious Emissions and Band Edges	Pass
5.1.6	15.247(d) & 15.205 & 15.209	Radiated Spurious Emissions and Band Edges	Pass
5.2.1	15.207	Mains Conducted Emission	Pass

Note: Determining compliance based on the results of the compliance measurement, not taking into account measurement instrumentation uncertainty.

Contents

HISTORY OF THIS TEST REPORT **6**

1. GENERAL REMARKS **7**
1.1 COMPLEMENTARY MATERIALS **7**
1.2 DECISION RULE OF CONFORMITY **7**

2. TEST SITES **8**
2.1 TEST LABORATORY **8**
2.2 TEST FACILITY **8**
2.3 TRACEABILITY **9**
2.4 CALIBRATION **9**
2.5 MEASUREMENT UNCERTAINTY **9**

3. GENERAL PRODUCT INFORMATION **10**
3.1 PRODUCT FUNCTION AND INTENDED USE **10**
3.2 SYSTEM DETAILS AND RATINGS **10**
3.3 NOISE GENERATING AND NOISE SUPPRESSING PARTS **11**
3.4 SUBMITTED DOCUMENTS **11**

4. TEST SET-UP AND OPERATION MODES **12**
4.1 PRINCIPLE OF CONFIGURATION SELECTION **12**
4.2 CARRIER FREQUENCY AND CHANNEL **12**
4.3 TEST OPERATION AND TEST SOFTWARE **13**
4.4 SPECIAL ACCESSORIES AND AUXILIARY EQUIPMENT **14**
4.5 TEST SETUP DIAGRAM **15**

5. TEST RESULTS **17**
5.1 TRANSMITTER REQUIREMENT & TEST SUITES **17**
5.1.1 Antenna Requirement *17*
5.1.2 Peak Output Power *18*
5.1.3 6 dB Bandwidth and 99% Occupied Bandwidth *21*
5.1.4 Power Spectral Density *22*
5.1.5 Conducted Spurious Emissions and Frequency Band Edges Measured in 100kHz Bandwidth *23*
5.1.6 Radiated Spurious Emissions and Band Edges *24*

5.2 MAINS EMISSION **29**
5.2.1 Mains Conducted Emission *29*

APPENDIX A - TEST RESULT OF CONDUCTED

APPENDIX B - TEST RESULT OF RADIATED EMISSIONS & MAINS CONDUCTED EMISSION

APPENDIX SP - PHOTOGRAPHS OF TEST SETUP

APPENDIX EP - PHOTOGRAPHS OF EUT

HISTORY OF THIS TEST REPORT

Revision	Description	Date Issued
R01	Original Release	2025-02-06

1. General Remarks

1.1 Complementary Materials

All attachments are integral parts of this test report. This applies especially to the following appendix:
Appendix A - Test Result of Conducted
Appendix B - Test Result of Radiated Emissions & Mains Conducted Emission
Appendix SP - Photographs of Test Setup
Appendix EP - Photographs of EUT

Applied Standard and Test Levels

Radio
FCC 47CFR Part 15: Subpart C Section 15.247
FCC 47CFR Part 2: Subpart J Section 2.1049
ANSI C63.10:2013
KDB 558074 D01 15.247 Meas Guidance v05r02

1.2 Decision Rule of Conformity

The decision rule of conformity of this test report is following the requirements of the requested standard in the quotation, and agreed among testing laboratory and manufacturer (applicant) to exclude the consideration of Measurement Uncertainty, unless it is required by the specific standard.

2. Test Sites

2.1 Test Laboratory

Taipei Testing Laboratories

11F. No.758, Sec. 4, Bade Rd., Songshan Dist.
Taipei City 105
Taiwan (R.O.C.)

2.2 Test Facility

Taipei Testing Laboratories

No.458-18, Sec. 2, Fenliao Rd., Linkou Dist.,
New Taipei City 244
Taiwan (R.O.C.)
FCC Registration No.: 180491
ISED Registration No.: 25563

2.3 Traceability

All measurement equipment calibrations are traceable to NML(Taiwan)/NIST(USA) or where calibration is performed outside Taiwan, to equivalent nationally recognized standards organizations.

2.4 Calibration

Equipment requiring calibration is calibrated periodically in a suitably accredited Calibration Lab. Additionally all equipment is verified for proper performance on a regular basics using in house standards or comparisons.

2.5 Measurement Uncertainty

All measurement uncertainty values are shown with a coverage factor of k=2 to indicate a 95% level of confidence.

Emission Measurement Uncertainty

Parameter	Uncertainty
Radiated Emission (9 kHz ~ 30 MHz)	± 1.15 dB
Radiated Emission (30 MHz ~ 200 MHz)	± 1.30 dB
Radiated Emission (200 MHz ~ 1 GHz)	± 1.30 dB
Radiated Emission (1 GHz ~ 18 GHz)	± 1.54 dB
Radiated Emission (18 GHz ~ 40 GHz)	± 2.52 dB
Mains Conducted Emission	± 1.65 dB

3. General Product Information

3.1 Product Function and Intended Use

The EUT is a Toast Terminal. It contains a Bluetooth compatible module enabling the user to communicate data through a Wireless interface.
For details refer to the User Guide, Data Sheet and Circuit Diagram.

3.2 System Details and Ratings

Basic Information of EUT

Item	EUT information
Kind of Equipment/Test Item	Toast Terminal
Type Identification	TT300
FCC ID	2AMNG-TT300

Technical Specification of EUT

Item	EUT information
Operating Frequency	2402 MHz ~ 2480 MHz
Channel Number	40
Data Rate	1Mbps, 2Mbps
Operation Voltage	120 Vac
Modulation	GFSK
Maximum Output Power (mW)	26.55
Antenna Information	Refer to 5.1.1
Accessory Device	Refer to 4.4

3.3 Noise Generating and Noise Suppressing Parts

Refer to the Circuit Diagram.

3.4 Submitted Documents

- Circuit Diagram
- Instruction Manual
- Rating Label
- Technical Description

4. Test Set-up and Operation Modes

4.1 Principle of Configuration Selection

The test modes were adapted accordingly in reference to the instructions for use.
During testing, Channel and Power Controlling Software provided by the customer was used to control the operating channel as well as the output power level. The RF output power selection is for the setting of RF output expected by the customer and is going to be fixed on the firmware of the final end product.

Table for Parameters of Test Software Setting

Frequency (MHz)	Power Setting
2402	9
2440	9
2480	9

4.2 Carrier Frequency and Channel

Channel	Freq. (MHz)	Channel	Freq. (MHz)	Channel	Freq. (MHz)	Channel	Freq. (MHz)
0	2402	10	2422	20	2442	30	2462
1	2404	11	2424	21	2444	31	2464
2	2406	12	2426	22	2446	32	2466
3	2408	13	2428	23	2448	33	2468
4	2410	14	2430	24	2450	34	2470
5	2412	15	2432	25	2452	35	2472
6	2414	16	2434	26	2454	36	2474
7	2416	17	2436	27	2456	37	2476
8	2418	18	2438	28	2458	38	2478
9	2420	19	2440	29	2460	39	2480

4.3 Test Operation and Test Software

Setup for testing: Test samples are provided with a USB interface which makes it possible to control them through a test software installed on a notebook computer.
This software was running on the laptop computer connected to the EUT. It was used to enable the operation modes listed as below.

Test Software	QRCT

The samples were used as follows:
A003831983-001
A003858647-001
Full test was applied on all test modes, but only worst case was shown.
There're two antennas (Ant 0 and Ant 1) used for Bluetooth function and supports SISO mode only.
According to the worst case of output power, only the ant 1 was evaluated for the full tests.

EUT Configure Mode	Applicable To				Description
	Antenna Port Conducted Measurement	Radiated Spurious Emissions above 1 GHz	Radiated Spurious Emissions below 1 GHz	Mains Conducted Emission	
-	√	√	√	√	-

Note:
1. The EUT had been pre-tested on the positioned of each 3 axis. The worst case was found when position on **Y-plane**.
2. "-" means no effect.

Antenna Port Conducted Measurement

☒ Pre-Scan full test was applied on all test modes, but only worst case was shown.
☒ Following channel(s) was (were) selected for the final test as listed below.

EUT Configure Mode	Available Frequency (MHz)	Tested Frequency (MHz)	Date Rate (Mbps)
-	2402 to 2480	2402, 2440, 2480	1
-	2402 to 2480	2402, 2440, 2480	2

Radiated Spurious Emissions (Above 1 GHz)

☒ Pre-Scan full test was applied on all test modes, but only worst case was shown.
☒ Following channel(s) was (were) selected for the final test as listed below.

EUT Configure Mode	Available Frequency (MHz)	Tested Frequency (MHz)	Date Rate (Mbps)
EUT only	2402 to 2480	2402, 2440, 2480	1
	2402 to 2480	2402, 2440, 2480	2

Radiated Spurious Emissions (Below 1 GHz)

☒ Pre-Scan full test was applied on all test modes, but only worst case was shown.
☒ Following channel(s) was (were) selected for the final test as listed below.

EUT Configure Mode	Available Frequency (MHz)	Tested Frequency (MHz)	Date Rate (Mbps)
EUT only	2402 to 2480	2440	2
EUT with Base	2402 to 2480	2440	2

Mains Conducted Emission

☒ Pre-Scan full test was applied on all test modes, but only worst case was shown.
☒ Following channel(s) was (were) selected for the final test as listed below.

EUT Configure Mode	Available Frequency (MHz)	Tested Frequency (MHz)	Date Rate (Mbps)
EUT only	2402 to 2480	2440	2
EUT with Base	2402 to 2480	2440	2

Test Condition

Test Item	Ambient Temperature	Relative Humidity	Tested by
Conducted Measurement	23.2-23.9 °C	49.4-62.8 %	Andy Chen
Radiated Spurious Emissions above 1 GHz	23.6-25.7 °C	55-56 %	Chuan Chu
Radiated Spurious Emissions below 1 GHz	23.6-25.7 °C	55-56 %	Chuan Chu
Mains Conducted Emission	21.2 °C	59 %	Chuan Chu

4.4 Special Accessories and Auxiliary Equipment

The product has been tested together with the following additional accessories:

Accessory of EUT

No.	Product	Brand	Model	Description
A	Adapter	HFE	FC065P17-200325D	--
B	LAN Cable	Nienyi	Ethernet Cable	--

Support Unit

Support Unit								
No	Description	Brand	Model	S/N	Shielded	Ferrite Core (Qty)	Length (cm)	Remark
-	Notebook	DELL	Latitude 7490	887V7Y2	-	-	-	--
-	USB Cable	TUV	TUV-07	1	NO	NO	150	--

4.5 Test Setup Diagram

<Radiated Spurious Emissions mode>

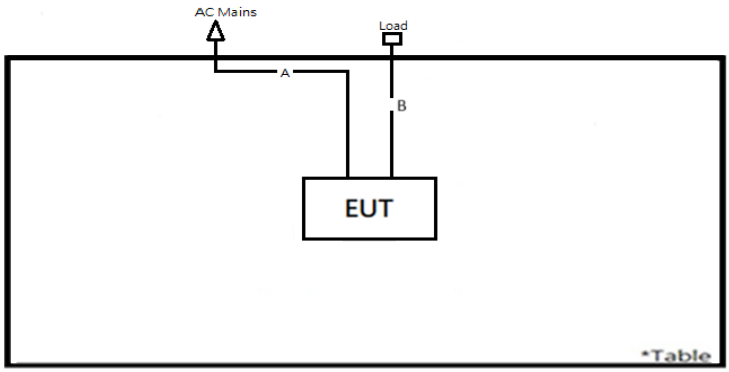

<Mains Conducted Emission mode>

4.6 Duty Cycle of Test Signal

Mode	On + Off Time (ms)	On Time (ms)	Duty Cycle (%)	Duty Factor (dB)
1Mbps	0.626	0.389	62.07	2.07
2Mbps	0.626	0.205	32.76	4.85

1Mbps

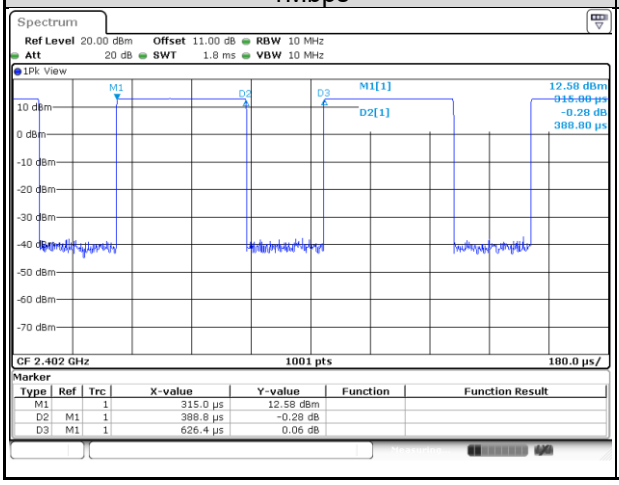

2Mbps

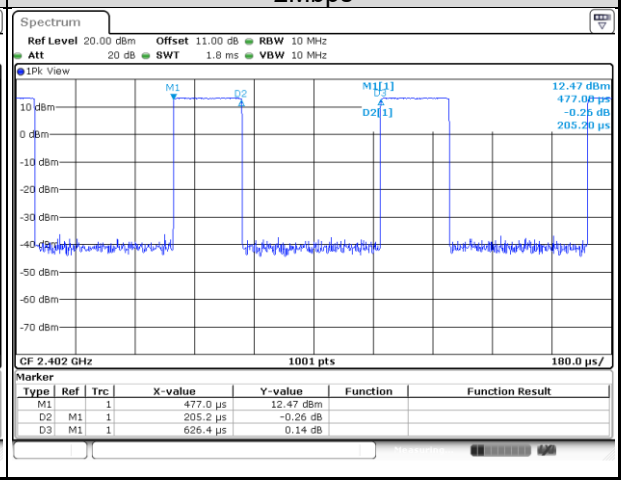

5. Test Results

5.1 Transmitter Requirement & Test Suites

5.1.1 Antenna Requirement

Requirement Use of approved antennas only

The gain value is derived from Antenna datasheet, the EUT's antenna specifications are described as below. The antenna is used with no possibility of replacement with a non-approved antenna by the end-user. Therefore, the EUT is considered to comply with this provision.

ANT	Gain (dBi)	Antenna Type
0	3.1	PIFA
1	3.3	PIFA
Max Peak Gain	3.3	-

Refer to EUT photo for details.

5.1.2 Peak Output Power

Limit 1 watt (30 dBm)

Kind of Test Site Shielded room

Test Setup

Test Instruments

Kind of Equipment	Manufacturer	Type	S/N	Calibration Date	Calibration Due Date	Test Date	
						From	Until
Power Meter	Anritsu	ML2495A	1901008	2024/03/12	2025/03/11	2024/10/11	2024/11/27
Power Sensor	Anritsu	MA2411B	1725269	2024/03/12	2025/03/11	2024/10/11	2024/11/27

Test Procedures

A peak power sensor was used on the output port of the EUT. A power meter was used to read the response of the peak power sensor. Record the power level.
Average power sensor was used to perform output power measurement, trigger and gating function of wide band power meter is enabled to measure max output power of TX on burst. Duty factor is not added to measured value.

Test Result

Peak Output Power

Ant 0

<1Mbps>

Channel	Channel Frequency	Peak Output Power		Limit (dBm)
	(MHz)	(dBm)	(mW)	
Low Channel	2402	13.09	20.37	30
Middle Channel	2440	13.89	24.49	30
High Channel	2480	12.78	18.97	30

<2Mbps>

Channel	Channel Frequency	Peak Output Power		Limit (dBm)
	(MHz)	(dBm)	(mW)	
Low Channel	2402	13.30	21.38	30
Middle Channel	2440	14.08	25.59	30
High Channel	2480	12.98	19.86	30

Ant 1

<1Mbps>

Channel	Channel Frequency	Peak Output Power		Limit (dBm)
	(MHz)	(dBm)	(mW)	
Low Channel	2402	13.24	21.09	30
Middle Channel	2440	14.06	25.47	30
High Channel	2480	12.91	19.54	30

<2Mbps>

Channel	Channel Frequency	Peak Output Power		Limit (dBm)
	(MHz)	(dBm)	(mW)	
Low Channel	2402	13.39	21.83	30
Middle Channel	2440	14.24	26.55	30
High Channel	2480	13.12	20.51	30

Average Power

Ant 0

<1Mbps>

Channel	Channel Frequency	Average Power	
	(MHz)	(dBm)	(mW)
Low Channel	2402	12.88	19.41
Middle Channel	2440	13.70	23.44
High Channel	2480	12.57	18.07

<2Mbps>

Channel	Channel Frequency	Average Power	
	(MHz)	(dBm)	(mW)
Low Channel	2402	12.87	19.36
Middle Channel	2440	13.69	23.39
High Channel	2480	12.56	18.03

Ant 1

<1Mbps>

Channel	Channel Frequency	Average Power	
	(MHz)	(dBm)	(mW)
Low Channel	2402	13.05	20.18
Middle Channel	2440	13.87	24.38
High Channel	2480	12.73	18.75

<2Mbps>

Channel	Channel Frequency	Average Power	
	(MHz)	(dBm)	(mW)
Low Channel	2402	13.02	20.04
Middle Channel	2440	13.85	24.27
High Channel	2480	12.71	18.66

5.1.3 6 dB Bandwidth and 99% Occupied Bandwidth

Limit The minimum 6 dB bandwidth shall be at least 500 kHz.

Kind of Test Site Shielded room

Test Setup

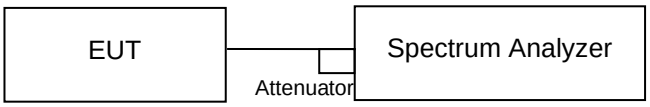

Test Instruments

Kind of Equipment	Manufacturer	Type	S/N	Calibration Date	Calibration Due Date	Test Date	
						From	Until
Spectrum Analyzer	R&S	FSV	101512	2024/02/22	2025/02/21	2024/10/11	2024/11/27

Test Procedure

a. Set resolution bandwidth (RBW) = 100 kHz
b. Set the video bandwidth (VBW) ≥ 3 x RBW, Detector = Peak.
c. Trace mode = max hold.
d. Sweep = auto couple.
e. Measure the maximum width of the emission that is constrained by the frequencies associated with the two amplitude points (upper and lower) that are attenuated by 6 dB relative to the maximum level measured in the fundamental emission.
f. For 99% occupied bandwidth measurement, the transmitter output was connected to the spectrum analyzer through an attenuator. The bandwidth of the fundamental frequency was measured by spectrum analyzer with resolution bandwidth in the range of 1% to 5% of the anticipated emission bandwidth, and a video bandwidth at least 3x the resolution bandwidth and set the detector to PEAK. The width of a frequency band such that, below the lower and above the upper frequency limits, the mean powers emitted are each equal to a specified percentage 0.5% of the total mean power of a given emission.

Test Results

Please refer to Appendix A.

5.1.4 Power Spectral Density

Limit

The power spectral density shall not be greater than 8 dBm in any 3 kHz band.

Kind of Test Site Shielded room

Test Setup

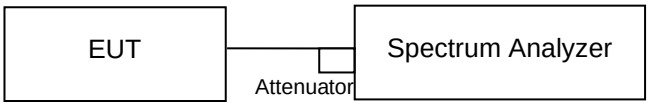

Test Instruments

Kind of Equipment	Manufacturer	Type	S/N	Calibration Date	Calibration Due Date	Test Date	
						From	Until
Spectrum Analyzer	R&S	FSV	101512	2024/02/22	2025/02/21	2024/10/11	2024/11/27

Test Procedure

a. Set analyzer center frequency to DTS channel center frequency.
b. Set the span to 1.5 times the DTS bandwidth.
c. Set the RBW to: 3 kHz ≤ RBW ≤ 100 kHz.
d. Set the VBW ≥ 3 × RBW.
e. Detector = peak.
f. Sweep time = auto couple.
g. Trace mode = max hold.
h. Allow trace to fully stabilize.
i. Use the peak marker function to determine the maximum amplitude level within the RBW.

Test Results

Please refer to Appendix A.

5.1.5 Conducted Spurious Emissions and Frequency Band Edges Measured in 100kHz Bandwidth

Limit

20dB (below that in the 100 kHz bandwidth within the band that contains the highest level of the desired power.)

Kind of Test Site Shielded room

Test Setup

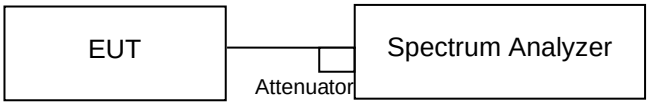

Test Instruments

Kind of Equipment	Manufacturer	Type	S/N	Calibration Date	Calibration Due Date	Test Date	
						From	Until
Spectrum Analyzer	R&S	FSV	101512	2024/02/22	2025/02/21	2024/10/11	2024/11/27

Test Procedure

Measurement procedure REF
1. Set the RBW = 100 kHz.
2. Set the VBW ≥ 300 kHz.
3. Detector = peak.
4. Sweep time = auto couple.
5. Trace mode = max hold.
6. Allow trace to fully stabilize.
7. Use the peak marker function to determine the maximum power level in any 100 kHz band segment within the fundamental EBW.

Measurement procedure OOBE
1. Set RBW = 100 kHz.
2. Set VBW ≥ 300 kHz.
3. Detector = peak.
4. Sweep = auto couple.
5. Trace Mode = max hold.
6. Allow trace to fully stabilize.
7. Use the peak marker function to determine the maximum amplitude level.

Test Results

Please refer to Appendix A.

5.1.6 Radiated Spurious Emissions and Band Edges

Limit

Radiated emissions which fall in the restricted bands, as defined in §15.205(a), must comply with the radiated emission limits specified in §15.209(a).
Emissions radiated outside the restricted and authorized frequency bands must either comply with the radiated emission limits specified for the restricted bands or in §15.247(d).

Kind of Test Site 3m Semi-Anechoic Chamber

Test Setup

<Radiated Emissions below 30 MHz>

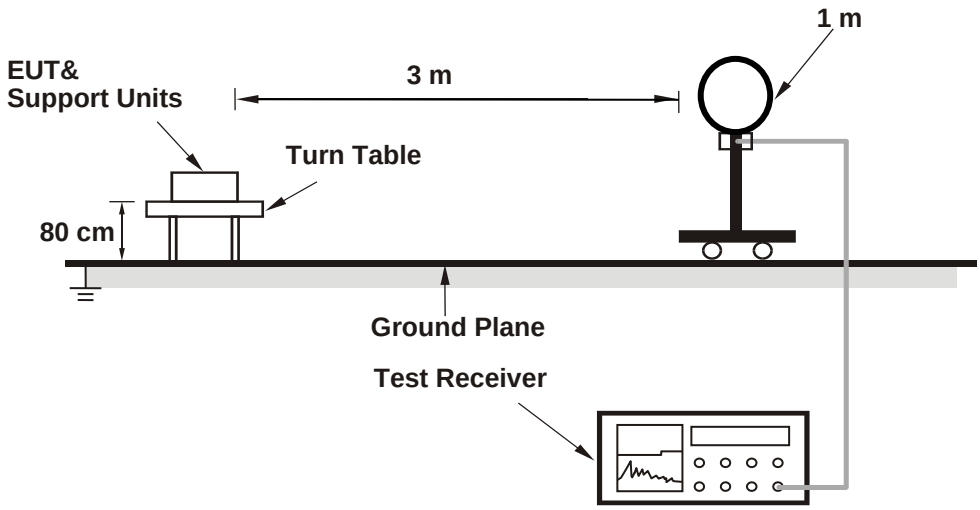

<Radiated Emissions 30 MHz to 1 GHz>

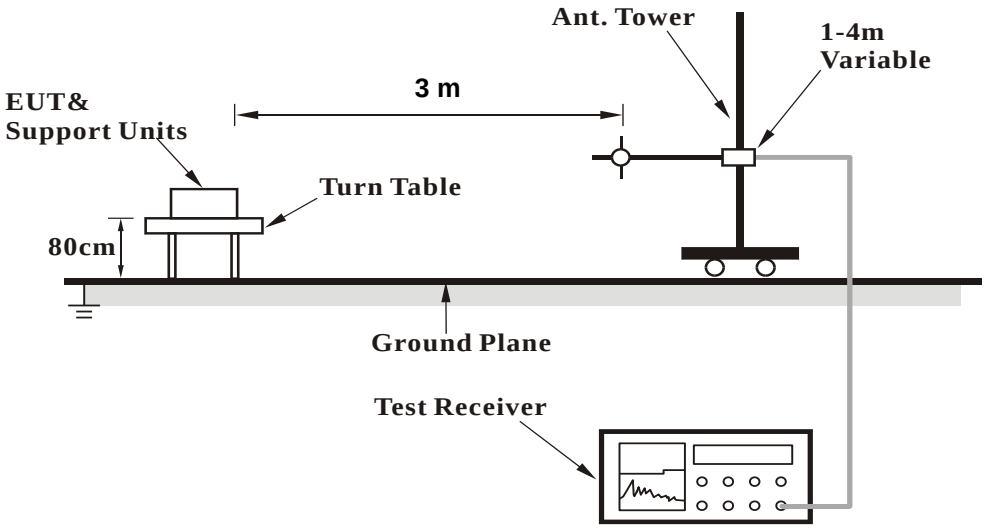

<Radiated Emissions above 1 GHz>

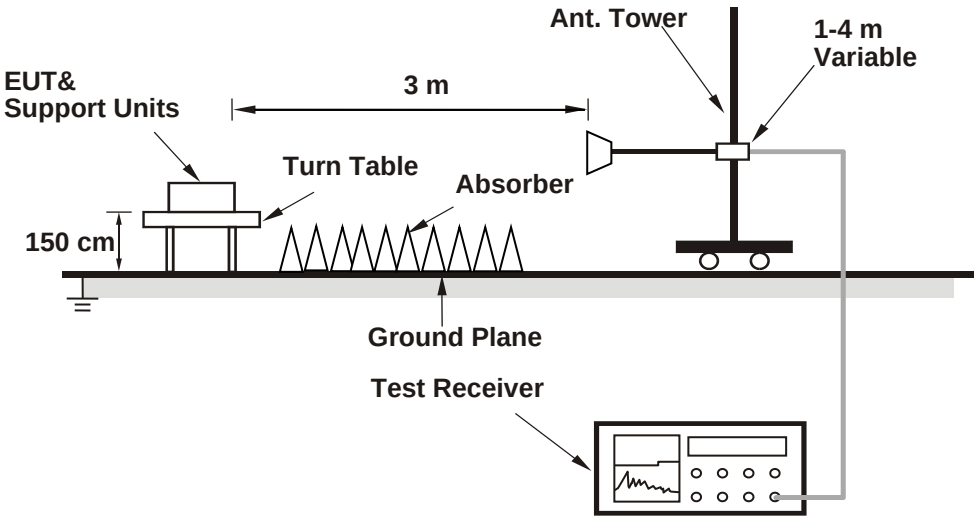

For the actual test configuration, please refer to the attached file (Test Setup Photo).

Test Instruments

Kind of Equipment	Manufacturer	Type	S/N	Calibration Date	Calibration Due Date
Above 1 GHz (Teste Period: 2024-11-18 ~ 2024-11-19)					
Signal Analyzer	R&S	FSV40	101509	2024/4/24	2025/4/23
Horn Antenna	ETS-Lindgren	3117	00218930	2023/12/7	2024/12/5
Amplifier	EM	EM01G18GA	60967	2024/4/2	2025/4/1
HF-AMP + AC source	EMCI	EMC184045SE	980657	2024/1/24	2025/1/22
Horn Antenna	SCHWARZBECK	BBHA 9170	00887	2024/4/1	2025/3/31
Test Software	Audix E3	15914a_20191106 tuv	PK-001087	N/A	N/A
30 MHz ~ 1 GHz (Teste Period: 2025-01-07 ~ 2025-02-04)					
Receiver	R&S	ESR7	102109	2024/2/23	2025/2/21
Bilog Antenna	SCHWARZBECK	VULB-9168	00951	2024/3/29	2025/3/28
LF-AMP	Agilent	8447D	2944a107722	2024/3/21	2025/3/20
Test Software	Audix E3	15914a_20191106 tuv	PK-001087	N/A	N/A
Below 30 MHz (Teste Period: 2025-01-07 ~ 2025-02-04)					
Receiver	R&S	ESR7	102109	2024/2/23	2025/2/21
Loop Antenna	SCHWARZBECK	FMZB 1513	1513-076	2024/12/16	2025/12/15
Test Software	Audix E3	15914a_20191106 tuv	PK-001087	N/A	N/A

Test Procedures

For Radiated Emissions below 30 MHz

a. The EUT was placed on the top of a rotating table 0.8 meters above the ground at a 3 meter chamber room. The table was rotated 360 degrees to determine the position of the highest radiation.
b. The EUT was set 3 meters away from the interference-receiving antenna, which was mounted on the top of a variable-height antenna tower.
c. Parallel (OPEN), perpendicular (CLOSE), and ground-parallel (GROUND) orientations of the antenna are set to make the measurement.
d. For each suspected emission, the EUT was arranged to its worst case and the rotatable table was turned from 0 degrees to 360 degrees to find the maximum reading.
e. The test-receiver system was set to Quasi-Peak Detect Function and Specified Bandwidth with Maximum Hold Mode.

Note:

1. The resolution bandwidth and video bandwidth of test receiver/spectrum analyzer is 9 kHz at frequency below 30 MHz.
2. All modes of operation were investigated and the worst-case emissions are reported.

For Radiated Emissions above 30 MHz

a. The EUT was placed on the top of a rotating table 0.8 meters (for 30 MHz ~ 1 GHz) / 1.5 meters (for above 1 GHz) above the ground at 3 meter chamber room for test. The table was rotated 360 degrees to determine the position of the highest radiation.
b. The EUT was set 3 meters away from the interference-receiving antenna, which was mounted on the top of a variable-height antenna tower.
c. The height of antenna is varied from one meter to four meters above the ground to determine the maximum value of the field strength. Both horizontal and vertical polarizations of the antenna are set to make the measurement.
d. For each suspected emission, the EUT was arranged to its worst case and then the antenna was tuned to heights from 1 meter to 4 meters and the rotatable table was turned from 0 degrees to 360 degrees to find the maximum reading.
e. The test-receiver system was set to quasi-peak detect function and specified bandwidth with maximum hold mode when the test frequency is below 1 GHz.
f. The test-receiver system was set to peak and average detected function and specified bandwidth with maximum hold mode when the test frequency is above 1 GHz. If the peak reading value also meets average limit, measurement with the average detector is unnecessary.

Note:

1. The resolution bandwidth and video bandwidth of test receiver/spectrum analyzer is 120 kHz for Quasi-peak detection (QP) or Peak detection (PK) at frequency below 1 GHz.
2. The resolution bandwidth of test receiver/spectrum analyzer is 1 MHz and the video bandwidth is 3 MHz for Peak detection (PK) at frequency above 1 GHz.
3. The resolution bandwidth of test receiver/spectrum analyzer is 1 MHz and the video bandwidth is ≥ 1/T (Duty cycle < 98 %) or 10 Hz (Duty cycle ≥ 98 %) for Average detection (AV) at frequency above 1 GHz.
4. All modes of operation were investigated and the worst-case emissions are reported.
5. The Radiated Emissions testing was performed in the X(E1), Y(H) and Z(E2) axis orientation. The worst-case Axis orientation is recorded in this test report.
6. The emission levels of other frequencies (including the 10th harmonic of the highest fundamental frequency) are very lower than the limit and are not shown in the test report.

Test Results

Factor (dB/m) = Antenna Factor (dB/m) + Cable Loss (dB) – Amplifier (dB)
Level (dBuV/m) = Reading (dBuV) + Factor (dB/m)

Please refer to Appendix B.

5.2 Mains Emission

5.2.1 Mains Conducted Emission

Limit

Mains Conducted Emission as defined in §15.207 must comply with the mains conducted emission limits.

Kind of Test Site Shielded room

Test Setup

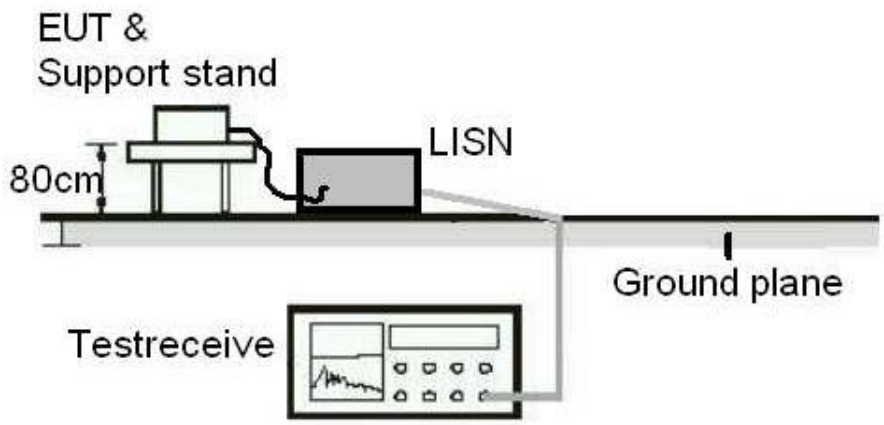

Test Instruments

Kind of Equipment	Manufacturer	Type	S/N	Calibration Date	Calibration Due Date
Two-Line V-Network	Rohde & Schwarz	ENV216	101243	2024/09/03	2025/9/2
EMI Test Receiver	R&S	ESCI 7	100797	2024/7/23	2025/7/22

Test Procedures

a. The EUT was placed 0.4 meters from the conducting wall of the shielded room with EUT being connected to the power mains through a line impedance stabilization network (LISN). Other support units were connected to the power mains through another LISN. The two LISNs provide 50 ohm/50 uH of coupling impedance for the measuring instrument.
b. Both lines of the power mains connected to the EUT were checked for maximum conducted interference.
c. The frequency range from 150 kHz to 30 MHz was searched. Emission levels under (Limit – 20 dB) was not recorded.

Note: The resolution bandwidth and video bandwidth of test receiver is 9 kHz for quasi-peak detection (QP) and average detection (AV) at frequency 0.15 MHz – 30 MHz.

Test Results

Please refer to Appendix B.