User Manual V1.0

DISCLAIMER

Thank you for purchasing the CHASING M2 underwater drone. Please read this entire document carefully before using the drone. By using this product, you hereby signify that you have read this disclaimer and all instructions carefully and that you understand and agree to abide by the terms and conditions herein.

Chasing accepts no liability for damage, injury, or any legal responsibility incurred directly or indirectly from the use of the CHASING M2 in the following conditions:

01. Damage(s) or injuries incurred when users are drunk, taking drugs, drug anesthesia, dizziness, fatigue, nausea and any other conditions no matter physically or mentally that could impair your ability.
02. Damage(s) or injuries caused by subjective intentional operations.
03. Any mental overcompensation caused by accident.
04. Failure to follow the guidance of the manual to assemble or operate.
05. Malfunctions caused by refit or replacement with non-Chasing accessories and parts, or unauthorized modification, disassembly, or shell opening not in accordance with official instructions.
06. Damage(s) or injuries caused by using third-party products or fake Chasing products.
07. Damage(s) or injuries caused by misoperation or subjective misjudgment.
08. Damage(s) or injuries caused by mechanical failures due to erosion, aging.
09. Damage(s) or injuries caused by operating the unit with a low battery alert.
10. Damage(s) or injuries caused by operating the drone out of maximum safe range and depth.
11. Damage(s) or injuries caused by knowingly operating the product in abnormal conditions (such as the assembly is not completed, or the main components have obvious faults, obvious defect or missing accessories).
12. Damage(s) or injuries caused by operating the drone in a sensitive zone such as a military area or private waters without official permission.
13. Damage or injury caused by using in bad water conditions (such as high winds, or turbid zone).
14. Damage or injury caused by uncontrollable external factors, including severe collision, tidal wave. swallowed by animal.
15. Damage(s) or injuries caused by infringement such as any data, photo or video material recorded by the use of the CHASING M2.
16. Other losses that are not covered by the scope of Chasing's liability.

CHASING M2 INSTRUCTION

ROV

CHASING M2 is a professional underwater ROV/Drone designed for professional users and industrial applications. M2 has 8 Vectored Thrusters layout which allows OMNI movement in all directions. The Maximum speed is 3 Knots, depth is 100 meters (330 FT) and the maximum horizontal radius is 200 meters (660FT). Compatible with sophisticated attachments such as Robot Claw, GoPro camera, external LED lights and laser scaler etc. CHASING M2 offers a built in 4K/ 1080p and 12-megapixel EIS image stabilization camera, 4000 lumen LED lights, removable battery and removable SD memory card. The aluminum alloy compact body (weighs less than 4.5KG / 10lbs) allows single person operation and Quick-Deployment in 3 minutes. The CHASING M2 is your portable, user-friendly and reliable light industrial underwater ROV.

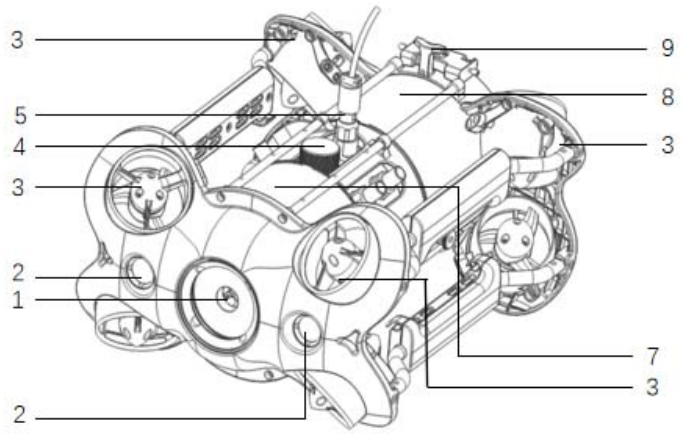

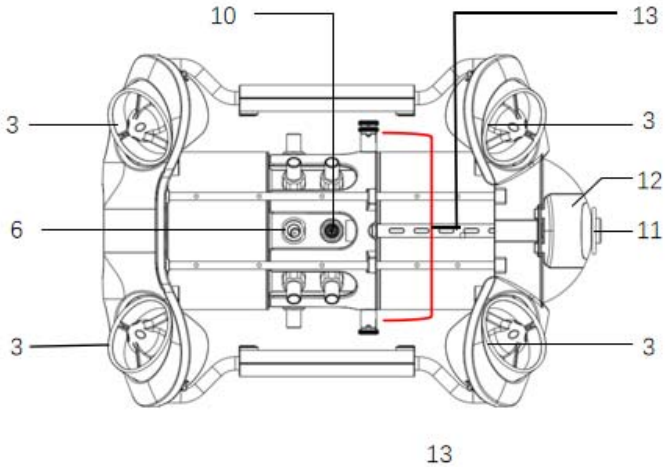

1. Camera
2. LED lights
3. Thruster/ Propeller
4. Micro SD slot
5. Tether socket / Charging socket
6. Sensor
7. Main Cabin
8. Battery Cabin
9. Buckle bracket
10. Peripheral interface
11. Battery pull ring （For battery disassembling）
12. Battery fastener
13. Battery twistlock knob

Remote controller

The Chasing M2 remote controller had integrated communication and control. It connects directly to the drone via the included tether and connects wirelessly to your mobile phone/tablet via Wi-Fi. It allows the drone to

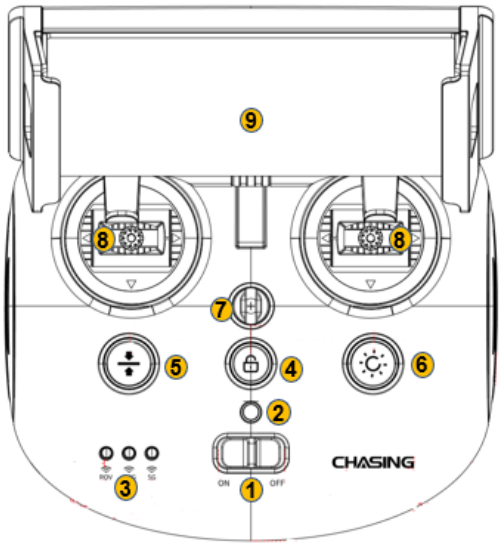

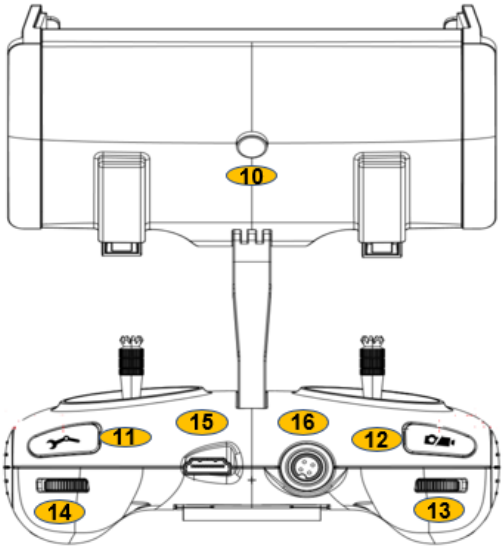

display a live video feed on your phone/tablet, which enables users to control the drone in real-time. The base station's HDMI output can also be used to display a live video feed to a larger screen.

1. Power switch: Turns controller on/off

2.Power Indicator: Green (High power), Blue (Medium power), Red (Low power)

3.Signal Indicator：

a 2.4G：2.4Ghz Wi-Fi indicator，always on when working

b 5G：5Ghz Wi-Fi indicator，always on when working.

c ROV(drone)：Indicates the communication status between the controller and the drone (Steady light indicates successful connection; Blinking light indicates disconnection.)

4. Unlock：Unlock/Lock，current state of the Thruster will show on the APP

5. Gesture back：ROV can be returned to a horizontal state

6. Led Control：On / off led light (third gear)

7. Safety Buckle：Can be used with a safety rope to prevent the remote control from falling

8. Control Sticks：Used to control the navigation of the ROV.

9. Phone/Tablet Clamp：Used to attach phone/tablet mount to mounting bracket.

10. Clamp Button：Pull apart the two ends and put in the phone/tablet, then press this button to tighten.

11. Robotic Arm Control：Short press to close and stop, long press for one second to open

12. Photo/Video：Short press to take photos, long press to start / end recording video

13. Left Angel Adjustment：Adjust the pitch angle

14. Right Angel Adjustment：Adjust the rollover angle

15. HDMI Socket：1080P HD image real-time output

16. Tether Connection Socket/Charging socket.

Note: Do not put the controller in the water to avoid damaging the device, damages caused by water ingress are not covered by the warranty.

Handle indicators introduction

Battery：

Red：10%↓ Red light flashes quickly；10-19% Red light flashes slowly；20-29% Red light always on.

Yellow：30-69% Yellow light always on；

Green：70-100% Green light always on;

Signal Indicator

a 2.4G：2.4Ghz Wi-Fi indicator，always on when working.

b 5G：5Ghz Wi-Fi indicator，always on when working.

c ROV：Indicates the communication status between the controller and the ROV (Steady light indicates successful connection, Blinking light indicates disconnection.)

Gesture back Button：

The blue light is always on when the ROV is in a non-horizontal position

Unlock Button：

Locking: No lights

Unlocking: Blue light on

Led Control Button：

Bright light：Blue light always on;

Low light: Blue light flash;

No light: Blue light off.

100/200 meters Tether & Winder

The tether is used to connect the drone and the remote controller
The winder is used to store the tether.

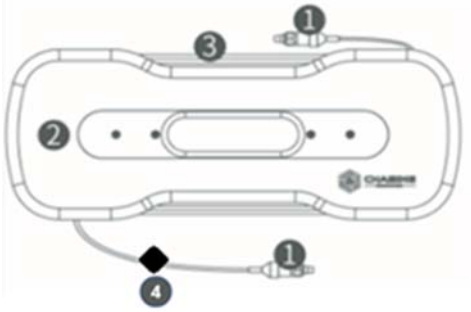

1. Tether connectors
2. Tether
3. Winder
4. Fastener

Warning：

a. Do not put exposed (unconnected) tether into the water or plashing liquid to the tether.
b. Check whether the O-ring on the tether connector pre-dive, make a replacement when it is missed or damaged.

Installation & Connection

1. Download CHASING GO1 App

CHASING GO1 App： Scan the following QR code or visit the IOS APP Store/Google Play/Chasing website for downloading. (For IOS 9.0 or later/Android version 4.4 or later)

2. Connect ROV with Remote Controller

a. Insert one end of the tether connector into the remote controller connector socket.
b. Reserve a suitable length and hang the Buckle on the Buckle Bracket, and make it tension.
c. Insert the other end of the tether connector to the ROV.
d. Securely hand-tighten both connectors.

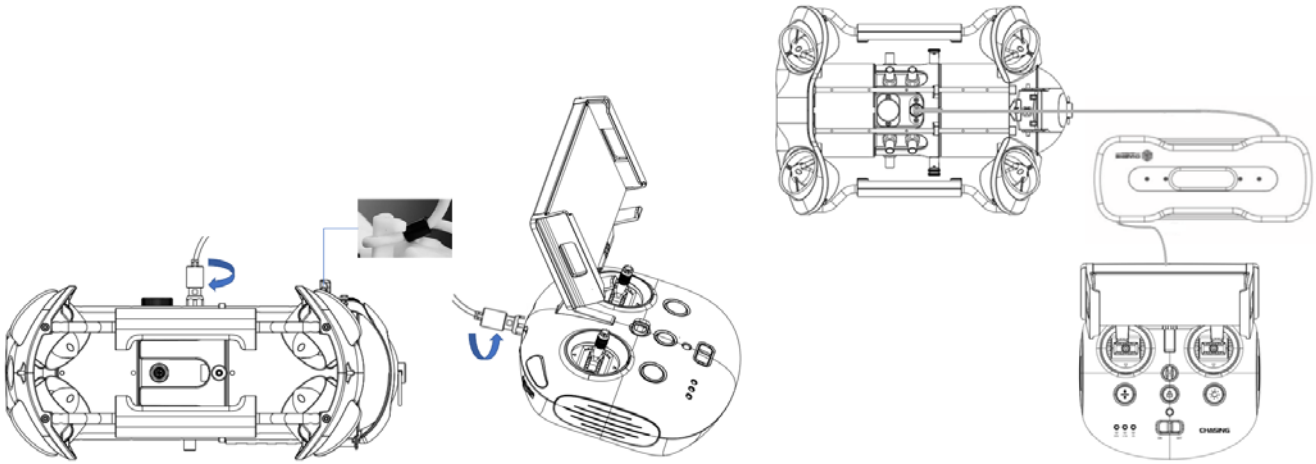

Warning: Check whether the O-ring on the tether connector pre-dive. If it is missed or damaged, please replace it in time.

3. Start (turn on) the ROV

a Turn on the remote controller power button.
b. A few seconds later, the remote controller's indicator lights up, 5G or 2.4G light will be always on. The drone LED lights will flash shortly, accompanied by two self-tests sounds.
c. Check all the connectors and lights pre-dive, and unlock the ROV when everything is ready underwater.

4. Wi-Fi Connection

a. On the Phone/Tablet, go to Wi-Fi settings.

b. Wait for 5-10 seconds and the Chasing_xxxx network will appear as an option.
c. Click to connect and enter the Wi-Fi password: 12345678

5. App interface Introduction

Open the APP and enter the camera, you will see the real-time scene transmission.

Note：① Note: As the drone will connect to the 2.4G Wi-Fi by default, you can switch to 5G Wi-Fi to get a better experience. (Turn on 5Ghz in the Settings-ROV, the drone's Wi-Fi will automatically restart, and you may need to re-connect to the Gladius Wi-Fi).

②You could check more guidance videos on the website page https://www.chasing.com/,or you could contact the global support team with any questions： support@chasing-innovation.com

6. Drop the ROV into Water

a. Grasp the grips on both sides of the ROV with both hands and gently throw the ROV into the water.
b. Unlock the Thruster(motors) to dive.
c. For a better experience, it is recommended to ensure that the water depth exceeds 1 meter.

Video and Photo Download

Connect Wi-Fi

1） Connect the ROV with remote controller by the tether, Switch remote controller power button to on

2） Find the M2_xxxxxxxx Wi-Fi on the phone/tablet/laptop Wi-Fi list.

3） Input M2 Wi-Fi Password ： 12345678

Download to Phone/Tablet

1）Open CHASING GO1 App, click the Media button in the lower right corner.
2）Find the video/photo that you want to download. Click the download button and the image will be saved directly to the phone/tablet's photo album (Download folder).

Download to Computer (laptop or the computer which could use Wi-Fi)

1） Open the web browser and type IP address:192.168.1.88
2） Find the video/photo that you want to download. Click the download icon and save, then the images will generally save in the Download folder.
3） It is recommended to use Firefox or Google Chrome browser for better experience.

Micro SD card copy

1） Remove the cover on the SD card socket counter clockwise, then open the waterproof rubber plug， and gently press the SD card. It will pop up automatically, then remove the SD card.
2） Read the SD card in a Card reader, and copy the images with computer.
3） Insert the SD card back to the SD card socket after copying the images, press gently to ensure the SD card and waterproof rubber plug are locked, and tighten the cover clockwise downward.

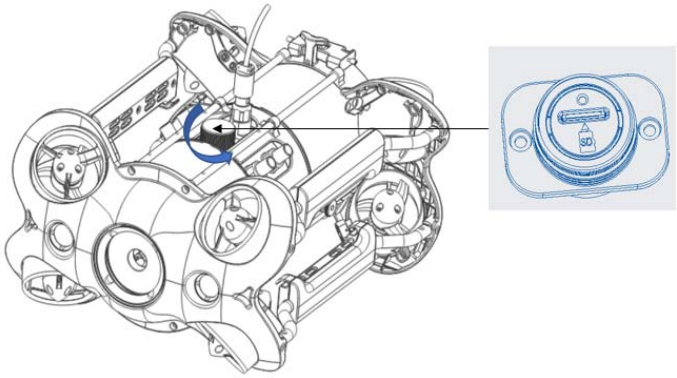

Warning：

1）Before removing or installing the Micro SD card, please switch remote controller power button to off, and wipe off the water on the ROV；

2） Check the O-ring on the tether connector, please be sure the O-ring cannot be squeezed out when tightening the cover. If it is missed or damaged, please replace it in time.

Disassemble and Install the Battery compartment

i. **Disassemble:**

1） Turn the knobs on both sides of the fuselage 90 ° to the shallow card slot；

2） Turn the switch ① on the slider to the left, and pull the lock assembly upwards while holding the chute ②;；

3） Pull the lower sides of the pressure plat③, by hand, pull down to deform the pressure plate ③, and make the buckle come off the rear bracket.

4） Pull the Battery compartment slowly to pull it out.

ii**. Install:**

1） Rotate the knobs on the both sides of the fuselage 90 ° to the deep card slot；

2） Slowly install the Battery compartment along the chute under the fuselage. Press down hard until you hear a "click" sound, and the knobs close in place.

3） Pull the lower sides of the Pressure Plate by hand, pull down to deform the Pressure Plate ③, make the buckle fasten on the rear bracket;

4） Press down firmly on the chute of the locking assembly. When you hear a “click” sound, the buckle is snapped into place properly, then the installation is complete.

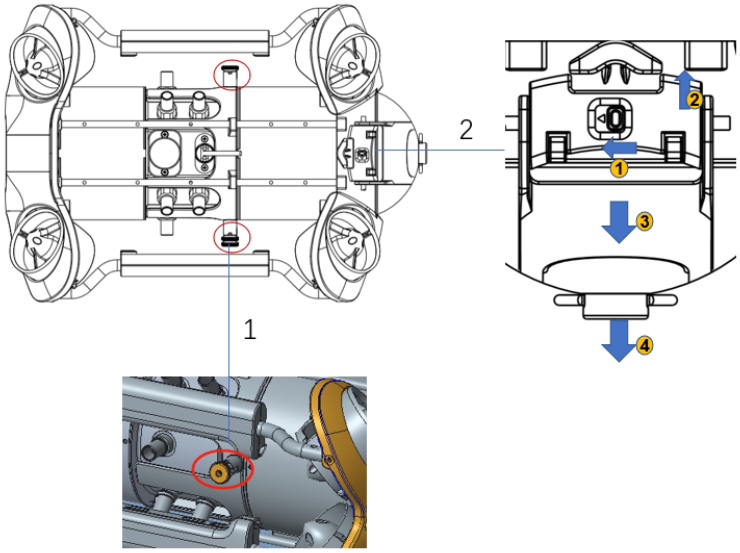
2
1
1
2
3
4

Navigation

M2 has 8 Vectored Thrusters layout which allows OMNI movement (up, down, left and right, back and forth, pitch, roll, and pan) in all directions.

Navigation attitude and remote control are as follows:：

I. Marching posture

Forward/backward

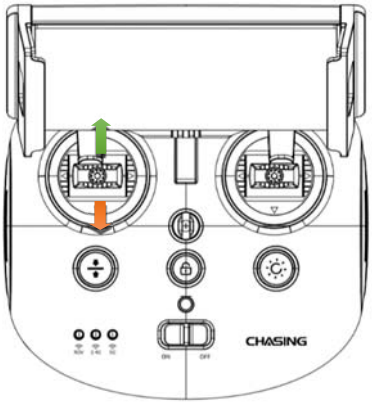

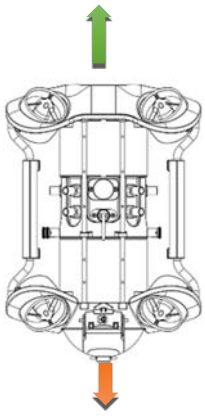

Pan left and right

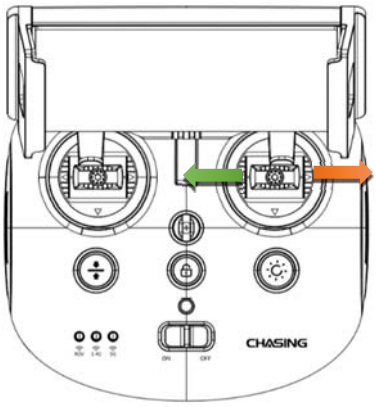

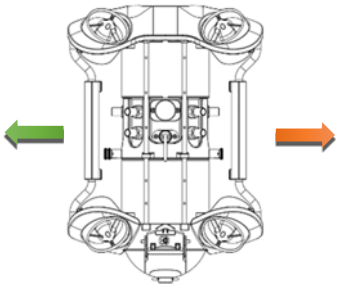

Up / down

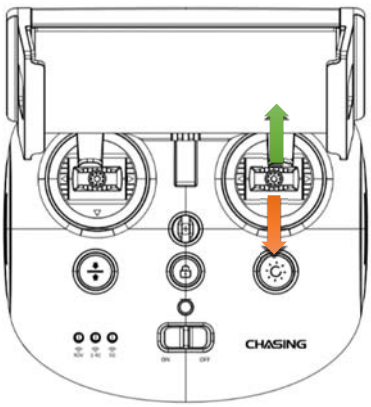

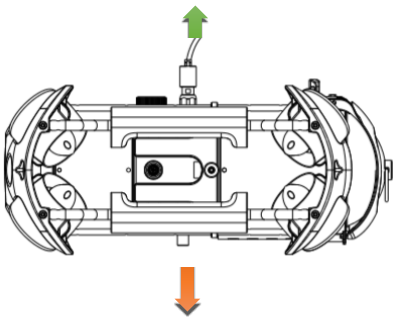

Turn left / right

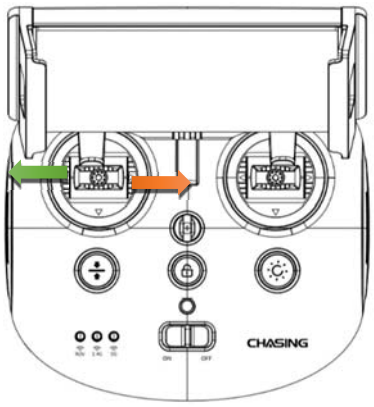

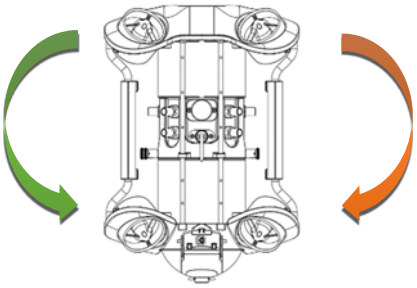

ii. Attitude adjustment

Pitch: Turn the dial to adjust the pitch attitude

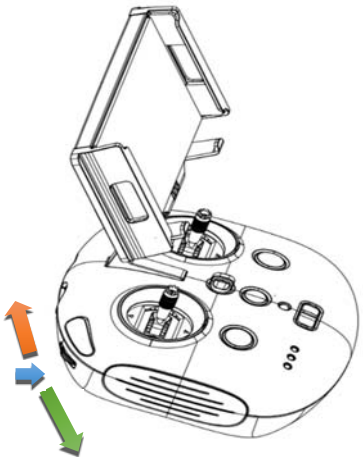

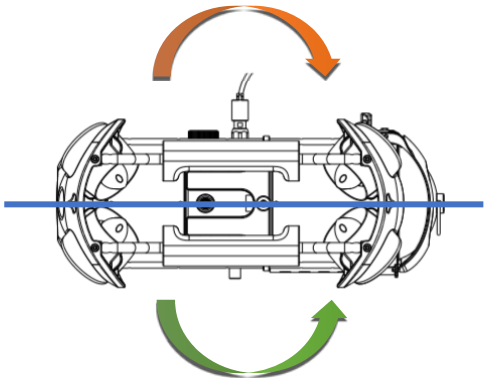

Roll: Turn the dial to adjust the roll attitude, release to fix status

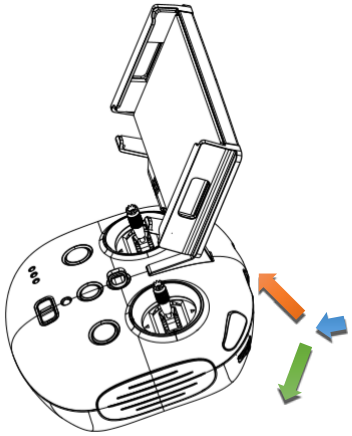

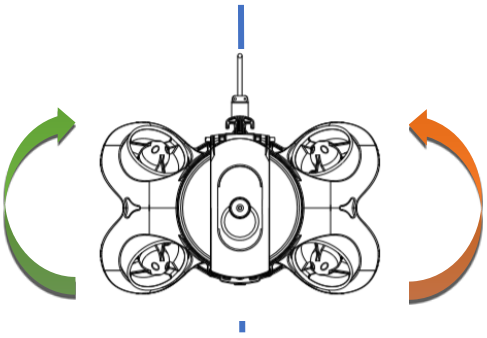

Charging Guidance

ROV & Remote Controller

Adapter（25.2V 2.9A）: It is a 3 in 1 charger that could charge the ROV, Remote Controller, Battery Cabin & E-reel，

Red light indicates Charging, green light indicates fully charged.

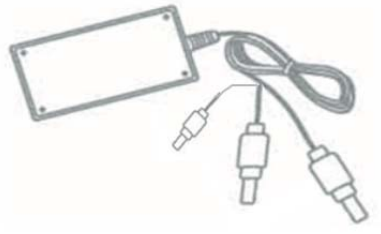

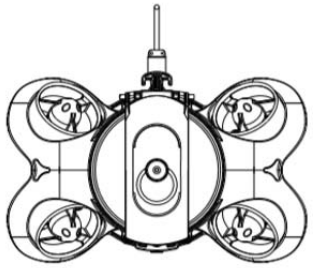

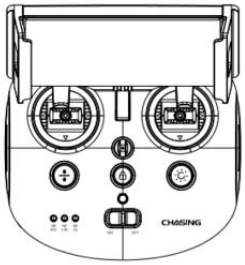

Specifications

ROV	
Size	15*10.5*6.5 inch
Weight	4.5KG
Battery	97.68Wh
Maximum Depth	328 ft
Maximum Speed	1.5 m/s (3 Knots))
Battery Life	≤ 4h (Depend on working condition)
Battery Cycle	>300times
Operating Temperature	14℉~113℉

Camera	
CMOS	1/2.3
Aperture	F1.8
Focal Length	1m
ISO Range	100-6400
Field of View	152°
Maximum Image Resolution	12M (4000*3000)
Image File Types	JPEG/DNG

Normal video	UHD:3840*2160(4K) 30fps FHD:1920*1080(1080p) 30/60/120fps
Slow motion video	720p： 8x (240fps) 1080p：4x (120fps)
Time-lapse video	4K/1080p
Video Maximum Stream	60M
Video Type	MP4
SD Card Memory	Standard 64G (maximum support 512G)

Remote Controller	
Size	6.3*6.1*4.9 inch
Weight	685g
Battery capacity	2500mAh
Battery life	≥ 6H (Depend on working condition)
Wireless	Wi-Fi
HDMI	1080P

Tether & Winder	
328ft Version (100M)	1.8KG
656ft Version(200M)	2.5KG

Adapter	
Adapter	2.9A/25.2V
ROV Charging time	2.5h
Remote controller charging time	2h

Dimmable LED Lights	
Brightness	2 x 2000LM
Color Temperature	5000K~5500K
CRI	85
Dimming	Three adjustable

Sensor	
IMU	Three-axis gyroscope/acceleration/compass
Depth Sensor	＜±0.25m
Temperature Sensor	＜ ±2℃

Maintenance and Precautions

1. Navigation Safety

Open sea navigation

Relatively clear water quality, no dense seaweed

No dense radio or radar signals

Do not dive more than 330 ft.

2.Battery Protection

Do not run out of battery power

Charge when power is less than 25%

When not in use, keep battery power at 50% - 70%

Working temperature -10 °C ~ 60 °C (-18°F-140°F)

3. Charging Protection

·Only use the Chasing standard adapter.
·Red light means charging.
·Green light means fully charged.

4.Thruster/ Propeller

a. Do not touch the propellers of the Thruster

b. Do not unlock the Thruster for more than 30 seconds in the air to avoid overheating

c After using the ROV in the salt water, please put it in fresh water for about 1 hour and turn it on, let the drone run for10 minutes to discharge the salt, and try out the water after cleaning with a towel.

5.Connector Sockets /Tether Connectors

·Check the Connector socket and tether pre-dive, keep dry and clean.

Salt and moisture may cause corrosion of the connector. Be sure to wash the socket with fresh water if the interface has water stains, and make the connectors dry after cleaning.

6. O-ring

Check whether the O-ring on the tether connector/Battery socket/SD card socket pre-dive, and make a replacement when it is missed or damaged.

It is recommended to grease the o-ring at the interface seal for maintenance each time when the battery cabin and Micro SD card are removed and installed

Other

1. Do not turn on the LED lights before entering the water to avoid damages.
2. Check if the Thrusters/propellers are getting stuck by seaweed or external matters, rinse the ROV with fresh water and then dry and put it back in the packing box.
3. Remote control cannot be washed with water, please clean it with towel.
4. The pull ring at the end of the battery can only be used to remove the battery, not to lift the ROV, otherwise it may damage the ROV.
5. Do not place heavy objects on drone or accessories to avoid possible damage.
6. People under the age of 16 should only use this drone under adult supervision.
7. When not in use, please do not expose the drone and accessories under sunlight. Store it in a cool place or in a special box.
8. Chloride or other chemicals can erode Chasing M2. Do not use if the pool is under high chlorine level.

Support

1.Any questions about our products please contact by support@chasing-innovation.com or leave a message on the Chasing Website (https://www.chasing.com) chatting window.

2.You can also join the official Gladius Mini Group on Facebook for latest news, app update and other shared stories with Chasing Products worldwide

3. This content is subject to change without prior notice, you could have the latest user manual by the https://www.chasing.com

FCC Warning

Any Changes or modifications not expressly approved by the party responsible for compliance could void the user's authority to operate the equipment.

This device complies with part 15 of the FCC Rules. Operation is subject to the following two conditions:

(1) This device may not cause harmful interference, and

(2) this device must accept any interference received, including interference that may cause undesired operation.

Note: This equipment has been tested and found to comply with the limits for a Class B digital device, pursuant to part 15 of the FCC Rules. These limits are designed to provide reasonable protection against harmful interference in a residential installation. This equipment generates uses and can radiate radio frequency energy and, if not installed and used in accordance with the instructions, may cause harmful interference to radio communications. However, there is no guarantee that interference will not occur in a particular installation. If this equipment does cause harmful interference to radio or television reception, which can be determined by turning the equipment off and on, the user is encouraged to try to correct the interference by one or more of the following measures:

—Reorient or relocate the receiving antenna.

—Increase the separation between the equipment and receiver.

—Connect the equipment into an outlet on a circuit different from that to which the receiver is connected.

—Consult the dealer or an experienced radio/TV technician for help.

ISEDC RSS warning

This device complies with Innovation, Science and Economic Development Canada Compliance licence-exempt RSS standard (s).

Operation is subject to the following two conditions:

(1) this device may not cause interference, and

(2) this device must accept any interference, including interference that may cause undesired operation of the device.

Le présent appareil est conforme aux CNR d'Innovation, Sciences et Développement économique Canada applicables aux appareils radio exempts de licence. L'exploitation est autorisée aux deux conditions suivantes:

(1) l'appareil ne doit pas produire de brouillage, et

(2) l'utilisateur de l'appareil doit accepter tout brouillage radioélectrique subi, même si le brouillage est susceptible d'en compromettre le fonctionnement

Any changes or modifications not expressly approved by the party responsible for compliance could void the user's authority to operate the equipment.

Tous les changements ou modifications non expressément approuvée par le responsible de la conformité pourrait vider l'utilisateur est habilité à exploiter l'équipemen.

SAR tests are conducted using standard operating positions accepted by the FCC/ISEDC with the device transmitting at its highest certified power level in all tested frequency bands, although the SAR is determined at the highest certified power level, the actual SAR level of the device while operating can be well below the maximum value.

Before a new model device is a available for sale to the public, it must be tested and certified to the FCC/ISEDC that it does not exceed the exposure limit established by the FCC/ISEDC, Tests for each device are performed in positions and locations as required by the FCC/ISEDC.

For limb worn operation, this device has been tested and meets the FCC/ISEDC RF exposure guidelines when used with an accessory designated for this product or when used with an accessory that contains no metal.

For body worn operation, this model device has been tested and meets the FCC/ISEDC RF exposure guidelines when used with an accessory designated for this product or when used with an accessory that Contains no metal and that positions the handset a minimum of 1 cm from the body.

Non-compliance with the above restrictions may result in violation of RF exposure guidelines.

Les tests SAR sont effectués à l'aide de positions d'exploitation standard acceptées par la FCC/ISEDC, l'appareil transmettant à son niveau de puissance certifié le plus élevé dans toutes les bandes de fréquences testées, bien que la R-S soit déterminée au niveau de puissance certifié le plus élevé, le niveau de R-S réel de l'appareil pendant son fonctionnement peut être bien inférieur à la valeur maximale.
Avant qu'un nouveau dispositif de modèle soit disponible à la vente au public, il doit être testé et certifié à la FCC/ISEDC qu'il ne dépasse pas la limite d'exposition établie par la FCC/ISEDC, les tests pour chaque appareil sont effectués dans des positions et des emplacements comme requis par la FCC/ISEDC.
Pour le fonctionnement porté par les membres, cet appareil a été testé et répond aux directives de LA FCC/ISEDC sur l'exposition rf lorsqu'il est utilisé avec un accessoire désigné pour ce produit ou lorsqu'il est utilisé avec un accessoire qui ne contient pas de métal.
Pour le fonctionnement du corps usé, ce dispositif de modèle a été testé et répond aux directives d'exposition RF de FCC/ISEDC lorsqu'il est utilisé avec un accessoire désigné pour ce produit ou lorsqu'il est utilisé avec un accessoire qui ne contient pas de métal et qui positionne le combiné à un minimum de 1 cm du corps.
Le non-respect des restrictions ci-dessus peut entraîner une violation des lignes directrices sur l'exposition aux RF.