USER MANUAL

MH-5100

10.1" Integrated Pad

Powered By Intel® Atom™

MH-5100 M1

MH-5100

10.1” Integrated Pad Powered By Intel® Atom™

COPYRIGHT NOTICE & TRADEMARK
All trademarks and registered trademarks mentioned herein are the property of their respective owners.

This manual is copyrighted in October 2017. You may not reproduce or transmit in any form or by any means, electronic, or mechanical, including photocopying and recording.

DISCLAIMER
This user’s manual is meant to assist users in installing and setting up the system. The information contained in this document is subject to change without any notice.

CE NOTICE
This is a class A product. In a domestic environment this product may cause radio interference in which case the user may be required to take adequate measures.

FCC NOTICE

This equipment has been tested and found to comply with the limits for a Class A digital device, pursuant to part 15 of the FCC Rules. These limits are designed to provide reasonable protection against harmful interference when the equipment is operated in a commercial environment. This equipment generates, uses, and can radiate radio frequency energy and, if not installed and used in accordance with the instruction manual, may cause harmful interference to radio communications. Operation of this equipment in a residential area is likely to cause harmful interference in which case the user will be required to correct the interference at his own expense.

You are cautioned that any change or modifications to the equipment not expressly approve by the party responsible for compliance could void your authority to operate such equipment.

FCC Caution

Any changes or modifications not expressly approved by the party responsible for compliance could void the user‘s authority to operate the equipment. The antenna(s) used for this transmitter must not be co-located or operating in conjunction with any other antenna or transmitter.

Radiation Exposure Statement:

This equipment complies with FCC radiation exposure limits set forth for an uncontrolled environment. End users must follow the specific operating instructions for satisfying RF exposure compliance. This transmitter must not be co-located or operating in conjunction with any other antenna or transmitter.

RF Exposure Information (SAR)

This device meets the government’s requirements for exposure to radio waves. This device is designed and manufactured not to exceed the emission limits for exposure to radio frequency (RF) energy set by the Federal Communications Commission of the U.S. Government.

The exposure standard employs a unit of measurement known as the Specific Absorption Rate, or SAR. The SAR limit set by the FCC is 1.6

W/kg. Tests for SAR are conducted using standard operating positions accepted by the FCC with the EUT transmitting at the specified power level in different channels. The highest SAR value for the device as reported to the FCC is 0.573 W/kg when placed next to the body.

The FCC has granted an Equipment Authorization for this device with all reported SAR levels evaluated as in compliance with the FCC RF exposure guidelines. SAR information on this device is on file with the FCC and can be found under the Display Grant section of www.fcc.gov/oet/ea/fccid after searching on FCC ID: 2AMRAMH5100.

	CAUTION: Danger of explosion may occur when the battery is incorrectly replaced. Replace the battery only with the same or equivalent type recommended by the manufacturer. Dispose of used batteries according to the manufacturer's instructions.

	WARNING: Some internal parts of the system may have high electrical voltage. We strongly recommend that only qualified engineers are allowed to service and disassemble the system. If any damages should occur on the system and are caused by unauthorized servicing, it will not be covered by the product warranty.

Contents

1 Introduction 1-1

1.1 About This Manual 1-2

2 Getting Started 2-1

2.1 Package List 2-2

2.2 Pad System Overview (With Built-In Barcode Scanner) 2-3

2.2.1 Front View 2-3

2.2.2 Rear View 2-3

2.2.3 Side View 2-4

2.2.4 Top View 2-4

2.2.5 Bottom View 2-4

2.3 Pad System Overview (With External Barcode Scanner (optional)) 2-5

2.3.1 Front View 2-5

2.3.2 Rear View 2-5

2.3.3 Side View 2-6

2.3.4 Top View 2-6

2.3.5 Bottom View 2-6

2.4 Lite Cradle System Overview 2-7

2.4.1 Front View 2-7

2.4.2 Rear View 2-7

2.4.3 Side View 2-8

2.4.4 Top View 2-8

2.4.5 Bottom View 2-9

2.4.6 Quarter View 2-10

2.5 Tiltable Cradle System Overview 2-11

2.5.1 Top View 2-11

2.5.2 Front View 2-11
2.5.3 Left Side View 2-12
2.5.4 Right Side View 2-12
2.5.5 Rear View 2-13
2.5.6 Bottom View 2-13
2.5.7 Quarter View 2-14

2.6 Quick Setup 2-15
2.6.1 Turning the Power On from Pad and Connect to Wi-Fi ... 2-15
2.6.2 Turning the Power On and Connect to Local Network 2-16
2.6.3 Installing Battery for Pad 2-18
2.6.4 Recharging Battery from Pad 2-19
2.6.5 Recharging Battery From Lite Cradle / Tiltable Cradle 2-19
2.6.6 Installing Integrated Pad Onto Lite Cradle / Tiltable Cradle 2-20
2.6.7 Separating Integrated Pad From Lite Cradle / Tiltable Cradle 2-22
2.6.8 Scanning Barcodes and QR Codes 2-24
2.6.9 Installing Hand Strap 2-25
2.6.10 Installing Neck Strap 2-26

2.7 Pad Specifications 2-27

2.8 Lite Cradle Specifications 2-30

2.9 Tiltable Cradle Specifications 2-31

2.10 OS Specifications 2-32

2.11 Safety Precautions 2-33

3 Hardware Configuration 3-1

3.1 Pad Function Buttons and I/O Ports 3-2

3.1.1 Power Button 3-2
3.1.2 DC-IN Port (DC-IN) 3-2
3.1.3 USB Port (USB1) 3-2
3.1.4 Audio Port (CN_JACK1) 3-3

3.2 Lite Cradle / Tiltable Cradle I/O Ports Diagram 3-4
3.2.1 Lite Cradle I/O Ports Diagram 3-4
3.2.2 Tiltable Cradle I/O Ports Diagram 3-4

3.3 Pad Main Board Component Locations 3-5
3.3.1 Top View of Pad Main Board Component Locations 3-5
3.3.2 Bottom View of Pad Main Board Component Locations ... 3-6

3.4 Pad Main Board Connectors Quick Reference Table 3-7

3.5 Setting Pad Main Board Connectors 3-8
3.5.1 Touch Panel Connector (TOUCH1) 3-8
3.5.2 Flash Descriptor Override Selection (JP1) 3-8
3.5.3 LVDS Connector (LVDS1) 3-9
3.5.4 RTC Battery Connector (BAT2) 3-10
3.5.5 Earphone Jack Connector (CN_JACK1) 3-10
3.5.6 Speaker Connector (SPK1) 3-11
3.5.7 Barcode Scanner Connector (CN_BARCODE) 3-11
3.5.8 Left Scan Button (BUTTON1) 3-12
3.5.9 Right Scan Button (BUTTON2) 3-12
3.5.10 Power Button (BUTTON4) 3-12
3.5.11 Battery Connector (BAT1) 3-13
3.5.12 DC IN Jack Connector (DC_IN1) 3-13
3.5.13 Cradle Connector (CRADLE1) 3-14
3.5.14 MCU F/W Update Connector (JP5) 3-14
3.5.15 Battery Lock Switch Button (BAT_LOCK) 3-15
3.5.16 MicroSD Card Connector (J2) 3-15
3.5.17 CCD Front Camera Connector (CCM1) 3-16

3.5.18 USB 2.0 Connector (USB1).....3-16
3.5.19 MSR Connector (MSR1) 3-17
3.5.20 SCR Connector (SCR1) 3-17

3.6 Daughter Board Connectors & Jumpers Quick Reference Table ..
.....3-18

3.7 Daughter Board MR-5100RA-1 Connectors Location.....3-20

3.8 Setting Daughter Board MR-5100RA-1 Connectors.....3-21
3.8.1 DC IN Jack Connector (DC_IN1) 3-21
3.8.2 DC Out Jack Connector (DC_OUT) 3-21
3.8.3 Universal Serial Bus 2.0 Connector (USB1) 3-21
3.8.4 Universal Serial Bus 2.0 Connector (USB2) 3-22
3.8.5 Universal Serial Bus 2.0 Connector (USB3) 3-22
3.8.6 Universal Serial Bus 2.0 Connector (USB4) 3-22
3.8.7 LAN Port (LAN1).....3-23

3.9 Daughter Board MR-5100RA-2 Connectors Location.....3-24

3.10 Setting Daughter Board MR-5100RA-2 Connector.....3-25
3.10.1 Lite Cradle / Tiltable Cradle Connector (CRADLE1) 3-25

3.11 Daughter Board MR-5100RA-3 Connectors Location.....3-26

3.12 Setting Daughter Board MR-5100RA-3 Connectors.....3-27
3.12.1 Barcode Scanner Connector (CN_BARCODE1) 3-27
3.12.2 Bar Code Scanner Connector (CN_BARCODE2).....3-27
3.12.3 Trigger Connector (JP1) 3-28
3.12.4 Trigger Connector (JP2) 3-28

3.13 Daughter Board MR-5100RA-5 Connectors & Jumpers Location .
.....3-29

3.14 Setting Daughter Board MR-5100RA-5 Connectors and Jumpers

.....3-31
3.14.1 COM1, COM2 Port Pin9 Definition Selection Guide (JP_COM1 and JP_COM2).....3-31
3.14.2 RJ-45 COM Port (COM1).....3-32
3.14.3 D-Sub 9 COM Port (COM2).....3-32
3.14.4 DC-IN Port (DC_IN1).....3-33
3.14.5 Dual USB Ports.....3-33
3.14.6 Local Area Network (LAN) Port (LAN1).....3-34
3.14.7 Cash Drawer Port (DRW1).....3-35
3.14.8 LAN & Cash Drawer Function Switch (SW1).....3-35
3.15 Daughter Board MR-5100RA-8 Connectors Location.....3-36
3.16 Setting Daughter Board MR-5100RA-8 Connectors.....3-36
3.16.1 Barcode Scanner Function Switch Connector (SW1).....3-36
3.16.2 Trigger Connector (JP1).....3-36
3.16.3 Trigger Connector (JP2).....3-36

4 Software Utilities.....4-1

4.1 Introduction.....4-2
4.2 Installing Intel® Chipset Software Installation Utility.....4-3
4.3 Installing Audio Realtek Software Installation Utility.....4-5
4.4 Installing G-Sensor Software Installation Utility.....4-12
4.5 Installing Bluetooth Software Installation Utility.....4-20
4.6 Cash Drawer API Function.....4-21

5 BIOS SETUP.....5-1

5.1 Introduction.....5-2
5.2 Accessing Setup Utility.....5-3

5.3 Main 5-7

5.4 Advanced 5-9

5.4.1 Advanced – USB Configuration 5-10

5.5 Security 5-11

5.6 Boot 5-13

5.6.1 Boot – EFI 5-15

5.7 Exit 5-16

Appendix A System Diagrams A-1

Integrated Pad Exploded Diagrams A-2

Exploded Diagram For Top Cover & Touch Panel & Panel Assembly A-2

Exploded Diagram For Pad PCBA Assembly A-3

Exploded Diagram For Bottom Cover Assembly A-4

Exploded Diagram For Camera Module & Barcode Scanner Module Assembly A-5

Exploded Diagram For Back Cover Assembly A-6

Exploded Diagram For Smart Card Reader Assembly A-7

Exploded Diagram For External Barcode Scanner Assembly (1) . A-8

Exploded Diagram For External Barcode Scanner Assembly (2) . A-9

Exploded Diagram For External Barcode Scanner Assembly (3) A-10

Exploded Diagram For Scan Button Assembly A-11

Lite Cradle Exploded Diagrams A-13

Exploded Diagram For Cradle Top Cover Assembly A-13

Exploded Diagram For Cradle PCBA & Bottom Cover Assembly A-15

Tiltable Cradle Exploded Diagrams A-16

Exploded Diagram For Base Bottom Cover Assembly.....A-16
Exploded Diagram For Rotation Cover Assembly.....A-18
Exploded Diagram For Base Top Cover Assembly A-20
Exploded Diagram For Pad Lock Assembly.....A-21
Exploded Diagram For Holder Back Cover Assembly.....A-22
Exploded Diagram For Holder Top Cover Assembly.....A-24
Exploded Diagram For Card Holder Assembly A-26

Appendix B Technical Summary B-1

Interrupt Map B-2
I/O Map B-16
Memory Map.....B-18
System BIOS Update Procedure.....B-20

Revision History

The revision history of MH-5100 User Manual is described below:

Version No.	Revision History	Date
1.0	Initial Release	09/06/2017

1 Introduction

This chapter provides the introduction for the MH-5100 system as well as the framework of the user manual.

The following topic is included:

- About This Manual

1.1 About This Manual

Thank you for purchasing our MH-5100 system. The MH-5100 provides faster processing speed, greater expandability and can handle more tasks than before. This manual is designed to assist you how to install and set up the whole system. It contains 5 chapters and 2 appendixes. Users can configure the system according to their own needs. This user manual is intended for service personnel with strong hardware background. It is not intended for general users.

The following section outlines the structure of this user manual.

Chapter 1 Introduction
This chapter provides the introduction for the MH-5100 system as well as the framework of the user manual.

Chapter 2 Getting Started
This chapter describes the package contents and outlines the system specifications. It also includes the physical illustrations and quick setup for the MH-5100 system. Read the safety reminders carefully on how to take care of your system properly.

Chapter 3 System Configuration
This chapter outlines the locations of the motherboard and daughter board components and their respective functions. You will learn how to set the jumpers and configure the system to meet your own needs.

Chapter 4 Software Utilities
This chapter contains helpful information for proper installations of the Intel Chipset Software Installation Utility, Audio Realtek Driver Utility, G-Sensor Driver Utility, Bluetooth Driver Utility and Cash Drawer API reference.

Chapter 5 BIOS Setup
This chapter indicates how to change the BIOS configurations.

Appendix A System Assembly Diagrams
This appendix provides the exploded diagrams and part numbers of the MH-5100.

Appendix B Technical Summary
This appendix provides the information about the allocation maps for system resources and System BIOS update procedure.

2 Getting Started

This chapter provides the information for MH-5100 system. In addition to the MH5100 Pad, users are also welcome to purchase the optional devices. This chapter describes the package contents, system overview and outlines the system specifications.

The following topics are included:

- Package List
- Pad System Overview
- Lite Cradle System Overview
- Tiltable Cradle System Overview
- Quick Setup
- Pad Specifications
- Lite Cradle Specifications
- Tiltable Cradle Specifications
- Safety Precautions

Experienced users can go to Chapter 3 Hardware Configuration on page 3-1 for a quick start.

2.1 Package List

If you discover any of the items listed below are damaged or lost, please contact your local distributor immediately.

Item	Q'ty
MH-5100 Integrated Pad	1
Quick Reference Guide	1
AC Power Adapter for Pad	1
Hand Strap (optional)	1
Neck Strap (optional)	1
Lite Cradle (optional)	1
Power Adapter for Lite Cradle (optional)	1
Power Cord for Lite Cradle (optional)	1

2.2 Pad System Overview (With Built-In Barcode Scanner)

Unit: mm

2.2.1 Front View

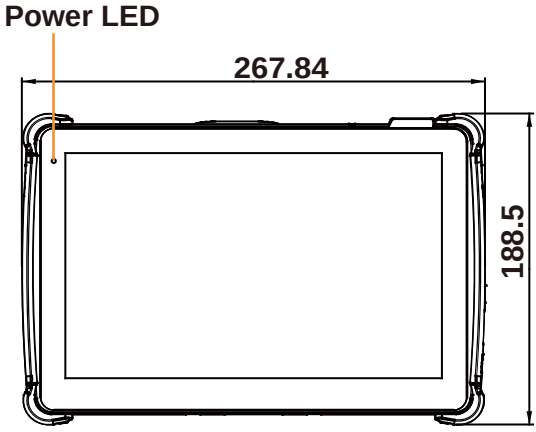

2.2.2 Rear View

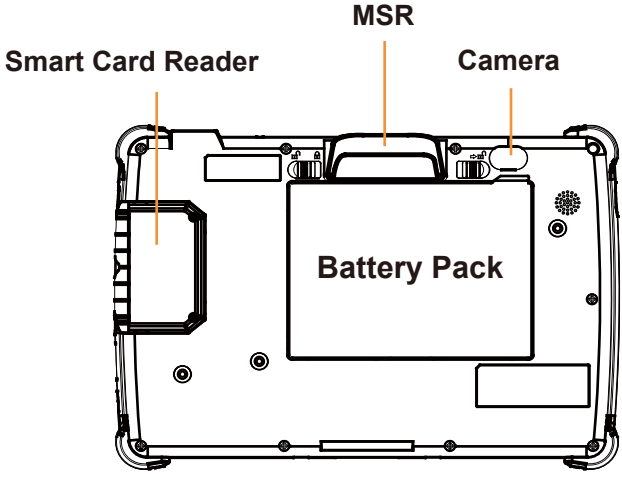

2.2.3 Side View

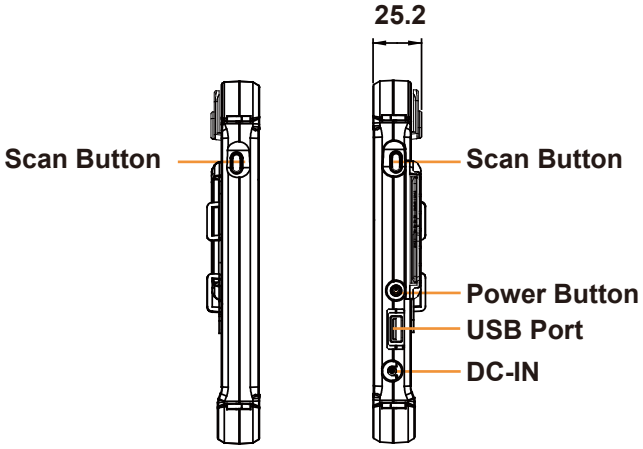

2.2.4 Top View

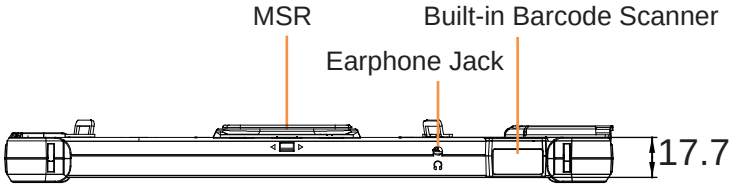

2.2.5 Bottom View

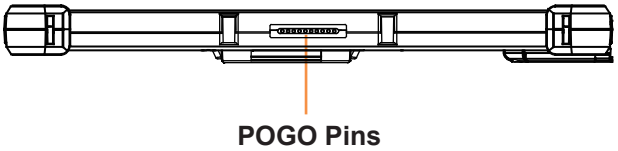

2.3 Pad System Overview (With External Barcode Scanner (optional))

Unit: mm

2.3.1 Front View

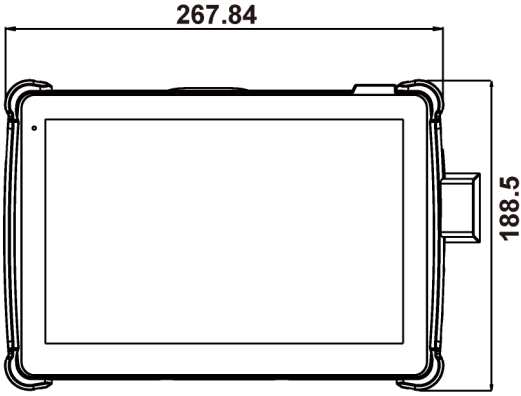

2.3.2 Rear View

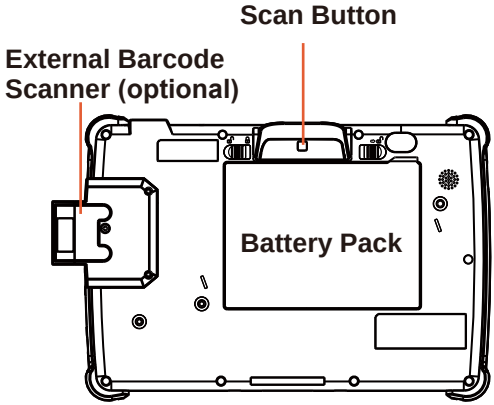

2.3.3 Side View

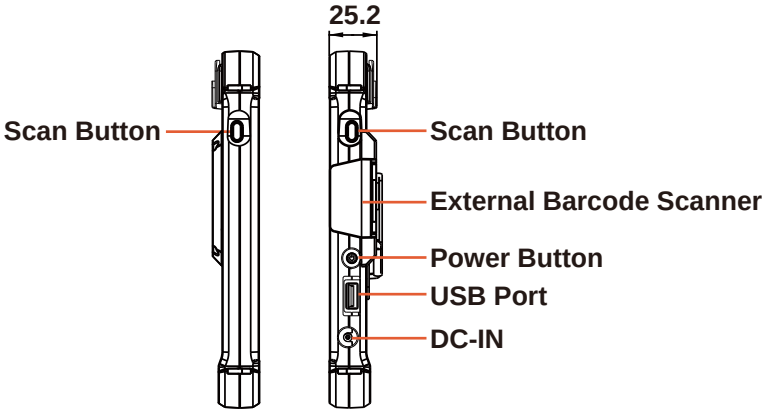

2.3.4 Top View

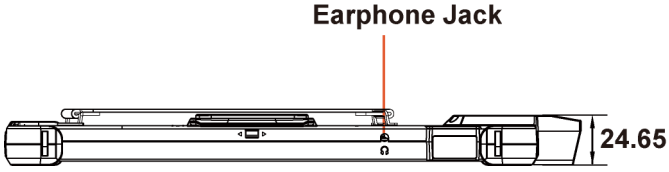

2.3.5 Bottom View

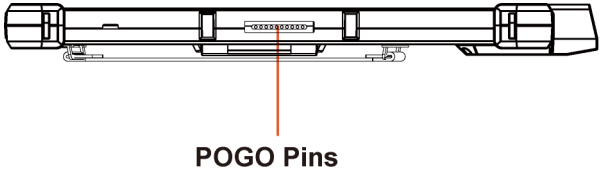

2.4 Lite Cradle System Overview

Unit: mm

2.4.1 Front View

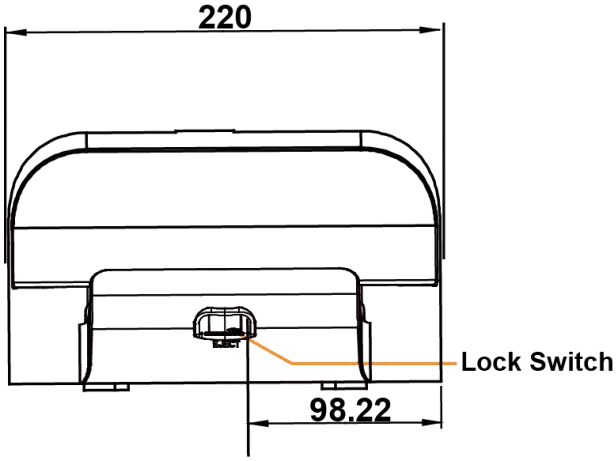

2.4.2 Rear View

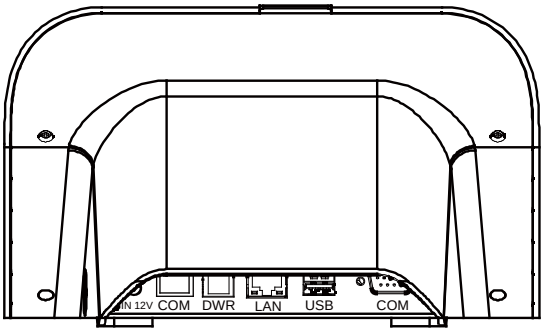

2.4.3 Side View

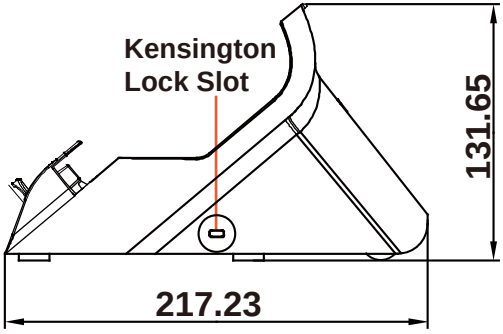

2.4.4 Top View

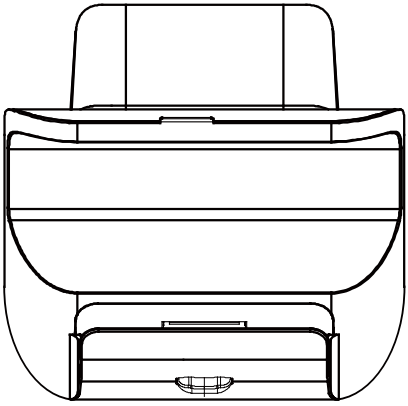

2.4.5 Bottom View

LAN and Cash Drawer Selection

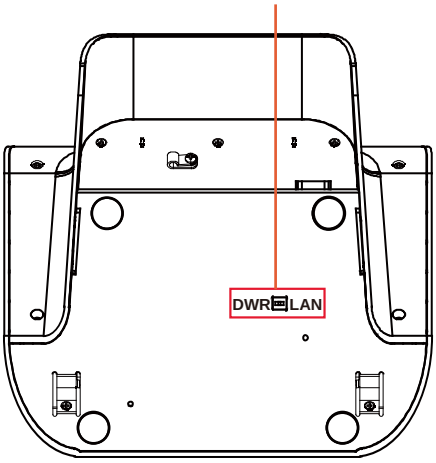

2.4.6 Quarter View

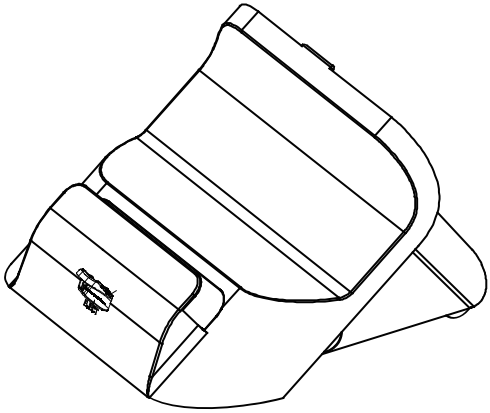

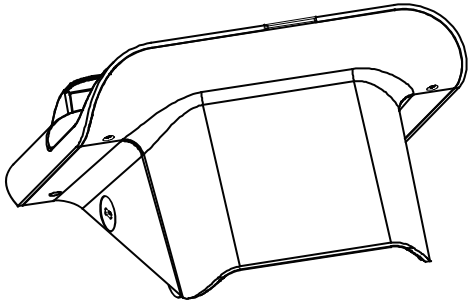

2.5 Tiltable Cradle System Overview

Unit: mm

2.5.1 Top View

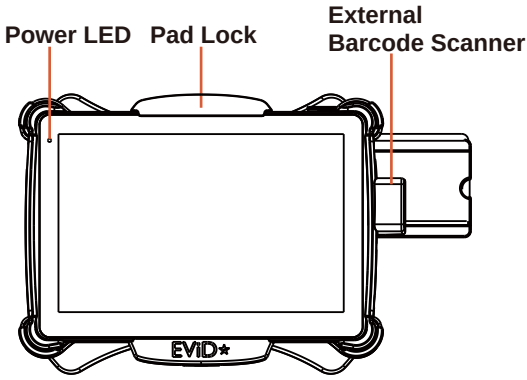

2.5.2 Front View

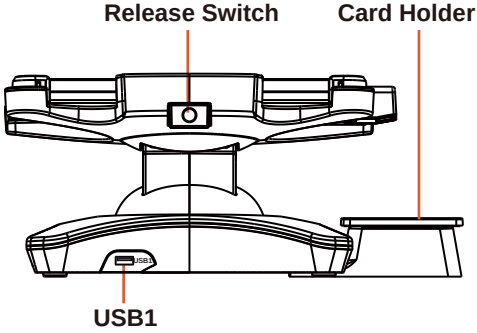

2.5.3 Left Side View

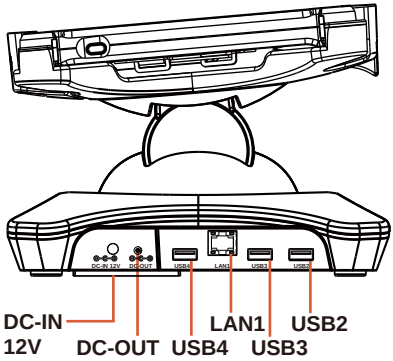

2.5.4 Right Side View

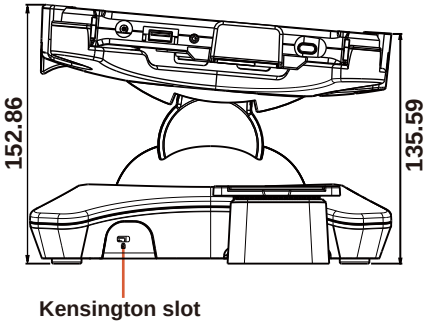

2.5.5 Rear View

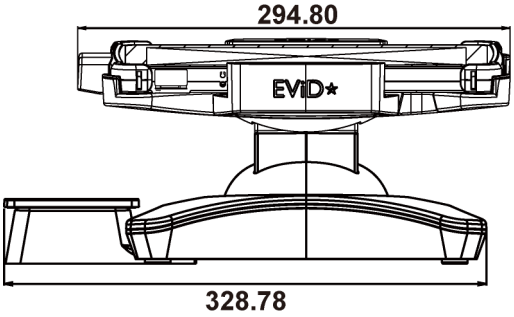

2.5.6 Bottom View

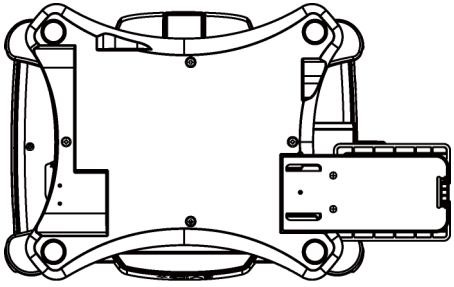

2.5.7 Quarter View

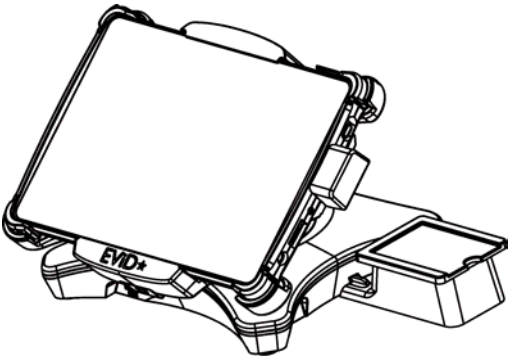

2.6 Quick Setup

2.6.1 Turning the Power On from Pad and Connect to Wi-Fi

Long press the **Power Button** on the right side of the Pad to turn on the system. Connect the Pad to a wireless network via Wi-Fi connection. (Refer to the **Side View** section of Pad for the location of **Power Button**.)

How to Set Up Wi-Fi Connection

Step 1. From the bottom right corner of the screen, tap the ^ icon from the tool tray.

Step 2. From the small pop-up window, tap on the Wi-Fi icon if it shows grey to activate Wi-Fi.

Step 3. Select a Wi-Fi network from the list and tap on it.

Step 4. Tap the **Connect** button.

Step 5. Enter the correct security key for the selected Wi-Fi network and wait for the Wi-Fi connection to establish.

You can also swipe the screen from the right side of the Pad to bring up the **ACTION CENTER** window and select **Network** menu item to enter the Wi-Fi network selection list.

For stability issue, always power off the Pad from Windows 10 OS. Make sure you have closed all the application programs before you close Windows. Tap on Start icon from the bottom left corner of the Pad and select the displayed menu icon and select **Shut down** from the selection list to turn off the Pad power.

2.6.2 Turning the Power On and Connect to Local Network

For Lite Cradle

Prerequisite: Insert a ball point pen or a pin into the hole of **DWR/LAN** selection switch slot located on the bottom base of the Lite Cradle, and switch it to the **LAN** port location. See the picture below:

LAN and Cash Drawer Selection

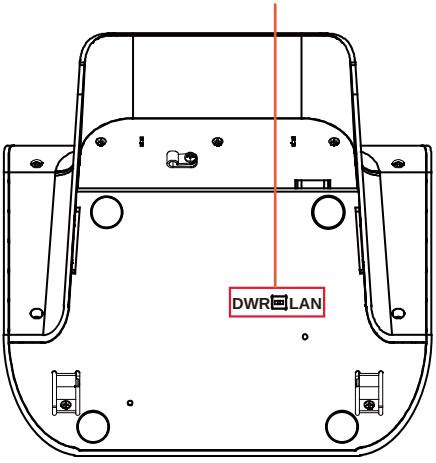

Press the **Power Button** on the right side of the Pad to turn on the system. Connect the Ethernet cable to the **LAN** port on the rear side of the Lite Cradle and the other end of the network cable to a port on your hub, switch or router. (Refer to the **Side View** section of Pad (With Built-In Barcode Scanner) for the location of **Power Button**.) Refer to the **Lite Cradle I/O Ports Diagram** section for the location of LAN port.

For Tiltable Cradle

Press the **Power Button** on the right side of the Pad to turn on the system. Connect the Ethernet cable to the **LAN** port on the bottom left side of the Tiltable Cradle and the other end of the network cable to a port on your hub, switch or router. (Refer to the **Side View** section of Pad (with External Barcode Scanner (optional)) for the location of **Power Button**.) Refer to the **Tiltable I/O Ports Diagram** section for the location of LAN port.

2.6.3 Installing Battery for Pad

Make sure to power off the device first before you start installing the battery.

Step 1. Slide to unlock the left-side battery switch with your left hand. See the Figure below.

Step 2. Use your left hand to push the right-side sliding tab to the right and long press on it and hold it.

Step 3. Use a fingertip of your right hand to remove the battery from the slim opening located under the Camera.

Step 4. Replace a new battery onto the back of Pad and the right-side locking switch snaps into place automatically.

Step 5. Slide the left-side battery switch to the right to secure and lock up the replaced battery.

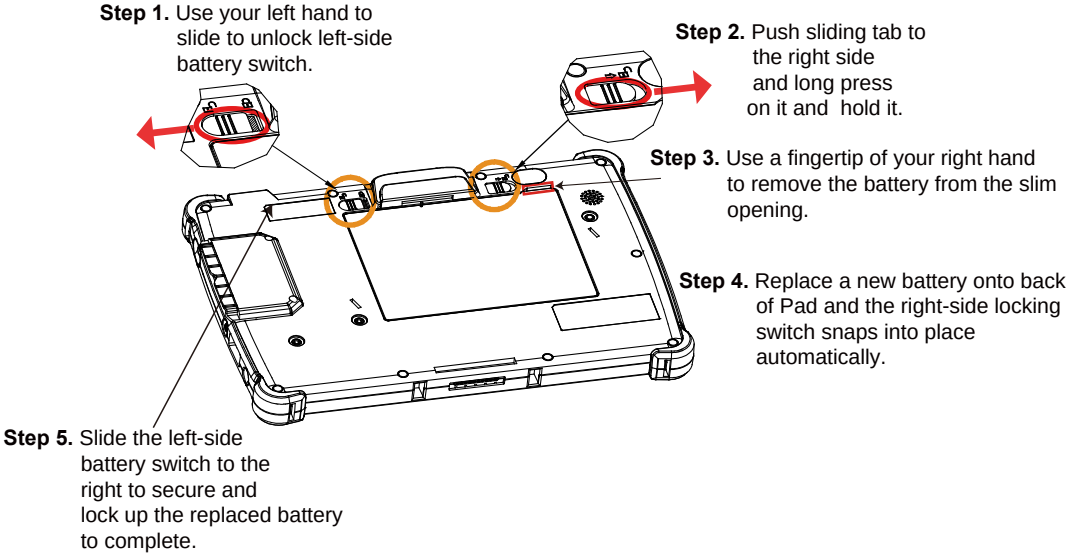

Note 1: The factory default battery cycle life guarantees to retain 80 percent of its original capacity after the battery has been charged and discharged for 300 times.

Note 2: Batteries are consumerables and the limited warranty for MH-5100 battery is **1** year only.

Low Battery Indicator

The low battery indicator will show on the LCD screen when the battery is nearly exhausted. When the low battery indicator appears on the tool tray, you should recharge the battery by connecting the power adapter of Pad/Lite Cradle/Tiltable Cradle or replace a fully charged battery immediately.

2.6.4 Recharging Battery from Pad

Before you use MH-5100 Pad, follow the instructions below to charge the battery:

Step 1. Connect the Pad's AC power adapter to the DC-IN jack located on the right side of the Pad. (Refer to the **Side View** section of Pad for the location of the DC-IN Jack.)

Step 2. Plug the other end to an AC power outlet.

MH-5100 Pad battery will then start charging, and the Power LED indicator on the top left corner of the touch screen will then flash GREEN. After the battery is fully charged, the Power LED indicator will turn to a solid green.

2.6.5 Recharging Battery From Lite Cradle / Tiltable Cradle

Lite Cradle

Step 1. Connect the Lite Cradle's AC power adapter to the DC-IN power jack located on the bottom of the Lite Cradle.

Step 2. Plug the other end to an AC power outlet.

Tiltable Cradle

Step 1. Connect the Tiltable Cradle's AC power adapter to the DC-IN power jack located on the bottom left side of the Tiltable Cradle.

Step 2. Plug the other end to an AC power outlet.

The Power LED indicator on the top left corner of the touch screen will then flash GREEN. After the battery is fully charged, the Power LED indicator will turn to a solid green.

2.6.6 Installing Integrated Pad Onto Lite Cradle / Tiltable Cradle

For Lite Cradle

Step 1. From the bottom side of Pad, align the ***two locking tabs*** located on both side of the **POGO** pins to their ***mating slots*** located inside of Lite Cradle base respectively.

Step 2. Lock the ***two locking tabs*** of Pad into their ***mating slots*** inside the Lite Cradle base and the Pad snaps into place.

Step 3. The installation is completed.

For Tiltable Cradle

Step 1. Place Integrated Pad into Tiltable Cradle.

Step 2. Push down the **Pad Lock** from the top side of the Tiltable Cradle and the Pad snaps into place. See the picture below.

Step 3. The installation is completed.

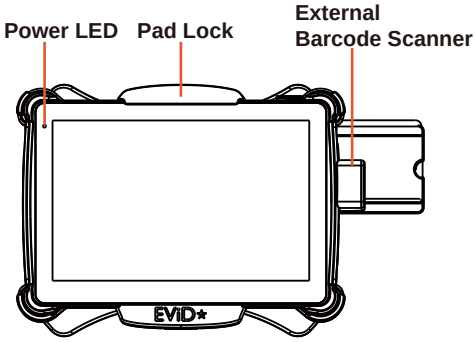

2.6.7 Separating Integrated Pad From Lite Cradle / Tiltable Cradle

For Lite Cradle

Step 1. Push down the Lock Switch on the front of Lite Cradle.

Step 2. Separate the integrated pad from the lite cradle. See the picture below:

Push down the Lock Switch to eject.

For Tiltable Cradle

Step 1. Push upwards the **Release Switch** located on the bottom side of Tiltable Cradle. The **Pad Lock** on the top side of Tiltable Cradle will then release. See the **System Top View** picture below for the location of **Release Switch**.

Step 2. Separate the integrated pad from the Tiltable Cradle.

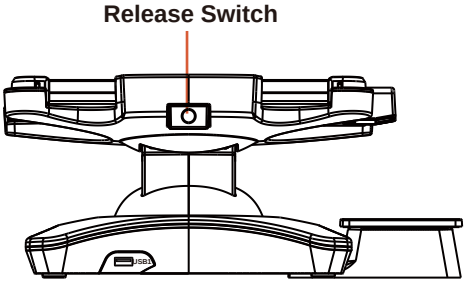

2.6.8 Scanning Barcodes and QR Codes

From Pad With Built-In Barcode Scanner

Step 1. Press to turn on the **Scan Button** located on the right/left side of the Pad. (Refer to the **Side View** section of Pad for the location of the **Scan Button**.)

Step 2. Point the **Barcode Scanner** at the barcode or QR code that you want to scan and position the light beam on the barcode/QR code. (Refer to the **Top View** section of Pad for the location of the **Barcode Scanner**.)

From Pad With External Barcode Scanner (optional)

Step 1. Press **Scan Button** located above the battery pack on the rear top of Pad. See the picture below:

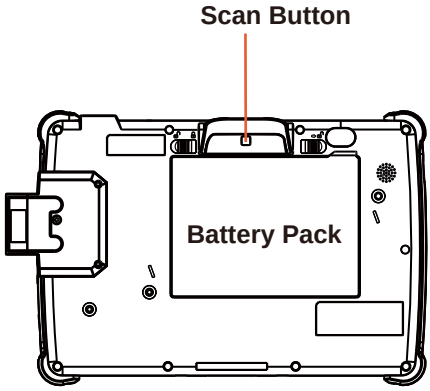

Or you can press **Scan Button** located on the right/left of Pad. (Refer to the **Side View** section of Pad (With External Barcode Scanner (optional)) for the location of the **Scan Button**.)

Step 2. Point the **External Barcode Scanner** at the barcode or QR code that you want to scan and position the light beam on the barcode/QR code.

After the barcode/QR code has been scanned successfully, you will hear one beep sound.

2.6.9 Installing Hand Strap

Step 1. Tighten the two screws of the strap bracket set onto the strap bracket holes on the back cover.

Step 2. Ready to hold the hand strap attached on the strap brackets to lift up the Pad with your hand.

Note: The strap bracket set is pre-installed for easy user installation before the shipment. The strap bracket set includes 2 x strap brackets, 2 x pan head screws (M3 x 6 mm) and 1 x Velcro badge.

2.6.10 Installing Neck Strap

Step 1. Insert one end of the provided neck strap through the upper opening of the right-side bumper rubber and adjust to tighten the neck strap.

Step 2. Insert another end of the neck strap through the upper opening of the left-side bumper rubber and adjust to tighten the neck strap.

Step 3. Put the installed neck strap around your neck to carry the Pad around.

Note: You can also select to put the neck strap through the lower openings of the right-side and left-side bumper rubbers.

2.7 Pad Specifications

Fundamental Spec. (Conform to RoHS Directive)		
Operator Display (LCD)	Type	10.1” LCD
	Resolution	WXGA 1280 x 800 dots
	Brightness	Typical 400 cd/m^2
	Life time of Backlight Lamp	30,000 hours
	Interface	LVDS
Backlight	Type	LED Backlight
Touch Panel	Type	10.1” PCT
	Interface	I2C
CPU	BGA on board CPU	Intel®Atom™Z3736F Processor BaseFrequency:1.33GHzUpto1.83GHz
Chipset	Intel Platform	Built-in CPU
Memory	DDR3L on Board	2GB DDR3L
PMIC	Type	TI
	Interface	I2C
Charger	Type	TI
	Interface	I2C
Storage (eMMC)	Type	32GB/64GB
	Interface	SDIO
Storage (SD)	Type	MicroSD Slot
	Interface	SDIO
BIOS	Insyde BIOS	SPI Flash ROM
Hardware Monitor	Type	(1) Voltage detection (Battery) (2) CPU & System Temperature detection (3) CPU Temperature over heat warning (4) CPU Temperature over heat shut down
Speaker	Type	1W Speaker x1
Wi-Fi + Bluetooth Module IC	Type	802.11 b/g/n wireless LAN and Bluetooth 4.0 module
	Interface	Wi-Fi: SDIO / Bluetooth: UART

G-Sensor (Accelerator sensor)	Type	ST
	Interface	I2C
LED Indicator	Tri-color Light LED Green / Yellow / Red LED	**1. Power LED (Green):** a. Start OS→constant Green light b. Charging→ flashing Green light c. Full charge→constant Green light **2. Alarm LED (Yellow):** a. 14%< Battery Capacity ≤ 8%→flashing Yellow light b. Battery Capacity < 4%→system turns to Sleep→Yellow Alarm LED turns OFF. **3. Error LED (Red):** a. S0 unlock battery switch→flashing Red light
Power Supply	Type	DC 12V/2A/24W for DC-IN / Cradle
Operating System	OS	Windows 10 IoT Enterprise LTSB 2016 OS (32 bits)
Dimension	L x W x T	259.9mm x 175.9mm x 17.7mm
Weight	Pad only	838g (without any optional devices attached)
Certificate	-	FCC/CE
Battery Pack Operation time	Main battery(1S2P)	8 hours @ 7900mAh
Sub Battery	RTC Battery	160mAh
Battery Pack Charging time	Main battery	Power ON: 5 hours Power OFF: 4 hours
IP Rating	Body unit	IP54 (front panel only)
Drop Impact Resistance	-	1.2m
Temperature	Operating Temperature	0°C ~ 40°C (32°F ~ 104°F)
	Storage Temperature	-20°C ~ 60°C (-4°F ~ 140°F)
Humidity	Operating Humidity	0~90%RH (no condensation)
	Storage Humidity	0~95%RH (no condensation)

Devices (Optional)		
Built-in Barcode Scanner	Type	Honeywell 2D Barcode scanner
	Interface	UART
External Barcode Scanner	Type	Honeywell 2D Barcode scanner
	Interface	UART
Rear Camera	Type	5M pixels module with autofocus function
	Interface	USB
MSR Module	Type	Secure head MSR (optional) (meet ISO 7811, support AAMVA / JIS II format, support single / dual / triple tracks)
	Interface	USB
Smart Card Reader Module	Type	Smart Card Reader (optional) (meet ISO 7816 & EMV Level 1 & 2 Certification)
	Interface	USB
External I/O Ports		
DC-IN Jack	Type	DC-IN Jack x 1
Cradle Connector	Type	POGO pins (1x10 pins) x 1
USB	Type	Standard USB (Type A) x1 for external expansion
SD	Type	MicroSD Slot for internal memory expansion
Audio Jack	Type	Audio Jack (3.5mm) x1
External Buttons (for side I/O & front panel)		
Power Button	Type	Power Button x1
Scan Button	Type	2 x Scan buttons (left and right) 1 x Scan button (rear top, optional)

2.8 Lite Cradle Specifications

Lite Cradle		
Cradle Connector	Type	POGO pins (1 x 10 pins) x 1
	Interface	USB 2.0/Power/GND
DC-IN Jack	Type	DC 12V IN x 1
USB	Type	Standard USB 2.0 port (Type A) x 2
COM	Type	RJ-45 with 12V/5V/RI x 1
COM	Type	D-Sub 9 with 12V/5V/RI x 1
LAN (10/100 Mbps) **or** **DWR** (Cash Drawer)	Type	RJ-45 x 1
	Type	RJ-11 with 12V/1A x 1
DIP Switch	-	LAN Port and Cash Drawer selection
Kensington Security Lock Slot	Type	1
Lock Switch	-	Fixing between Integrated Pad and Cradle
AC Power Adapter	Type	12V/5A/60W AC Power Adapter x 1
Dimension	L x W x T	220 x 217.23 x 131.65mm
Weight	Lite Cradle only	About 858g

Note: The functions of Ethernet LAN & Cash Drawer are co-layout and can be selected by DIP Switch.

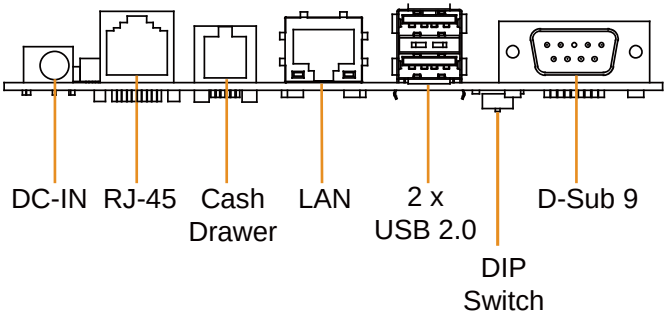

2.9 Tiltable Cradle Specifications

Tiltable Cradle		
Cradle Connector	Type	POGO pins (1 x 10 pins) x 1
	Interface	USB 2.0/Power/GND
DC-IN Jack	Type	DC 12V In x 1
DC-Out Jack	Type	DC 8.4V Out x 1
USB	Type	Standard USB 2.0 port (Type A) x 4
LAN (10/100 Mbps)	Type	RJ-45 x 1
Kensington Security Lock Slot	Type	1
AC Power Adapter	Type	12V/5A/60W AC Power Adapter x 1
Dimension	L x W x T	328.78mm x 213.35mm x 152.86mm
Weight	Tiltable Cradle only	About 1.67 kg

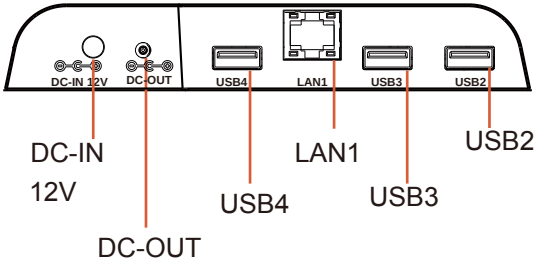

2.10 OS Specifications

OS	Description
Windows® 10 IoT Enterprise LTSB 2016	Supports 32 bits

2.11 Safety Precautions

Before operating this system, read the following information carefully to protect your systems from damages, and extend the life cycle of the system.

1. Check the Line Voltage
   - The operating voltage for the power supply should be within the range of 100V to 240V AC; otherwise the system may be damaged.

2. Environmental Conditions
   - Place your MH-5100 on a sturdy, level surface. Be sure to allow enough space around the system to have easy access needs.
   - Avoid installing your MH-5100 system in extremely hot or cold places.
   - Avoid direct sunlight exposure for a long period of time (for example, in a closed car in summer time. Also avoid the system from any heating device.). Or do not use MH-5100 when it has been left outdoors in a cold winter day.
   - Avoid moving the system rapidly from a hot place to a cold place, and vice versa, because condensation may occur inside the system.
   - Protect your MH-5100 from strong vibrations which may cause hard disk failure.
   - Do not place the system too close to any radio-active device. Radio-active device may cause signal interference.
   - Always shut down the operating system before turning off the power.
3. Handling
   - Avoid placing heavy objects on the top of the system.
   - Do not allow any objects to fall into this device.
   - If water or other liquid spills into the device, unplug the power cord immediately.
4. Good Care
   - When the outside case gets stained, remove the stains using neutral washing agent with a dry cloth.
   - Never use strong agents such as benzene and thinner to clean the surface of the case.
   - If heavy stains are present, moisten a cloth with diluted neutral washing agent or alcohol and then wipe thoroughly with a dry cloth.
   - If dust is accumulated on the case surface, remove it by using a special vacuum cleaner for computers.

3 Hardware Configuration

This chapter contains helpful information about the jumper & connector settings, and component locations.

The following sections are included:

- Pad Function Buttons and I/O Ports
- Lite Cradle / Tiltable Cradle I/O Ports Diagrams
- Pad Main Board Component Locations
- Pad Main Board Connectors Quick Reference Table
- Setting Pad Main Board Connectors
- Setting Daughter Board MR-5100RA-1 Connectors
- Setting Daughter Board MR-5100RA-2 Connector
- Setting Daughter Board MR-5100RA-3 Connectors
- Setting Daughter Board MR-5100RA-5 Connectors and Jumpers
- Setting Daughter Board MR-5100RA-8 Connectors

3.1 Pad Function Buttons and I/O Ports

3.1.1 Power Button

To turn on the system, press the Power Button on the right side of the Pad briefly.

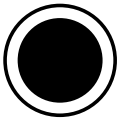

Power Button

ACTION	ASSIGNMENT
Press	0V
Release	+2.8V

3.1.2 DC-IN Port (DC-IN)

DC-IN

Port Name: DC-IN
Description: DC Power-In Port. The DC-IN Port is located on the right side of the Pad.

PIN	ASSIGNMENT	PIN	ASSIGNMENT
0	+12V	2	GND
1	+12V	3	GND

3.1.3 USB Port (USB1)

USB1

Port Name: USB1
Description: USB Type A Port (Side I/O)

PIN	ASSIGNMENT	PIN	ASSIGNMENT
1	+5V (Max. current: 0.5A)	3	D+
2	D-	4	GND

Note: The USB1 port is provided with Standby power 5V.

3.1.4 Audio Port (CN_JACK1)

CN_JACK1

Port Name: CN_JACK1
Description: Audio Port located on the top right side of the Pad.

PIN	ASSIGNMENT
1	LEFT
2	RIGHT
3	GND
4	MIC
5	HP_DET

3.2 Lite Cradle / Tiltable Cradle I/O Ports Diagram

3.2.1 Lite Cradle I/O Ports Diagram

The I/O ports are located on the bottom side of the Lite Cradle.

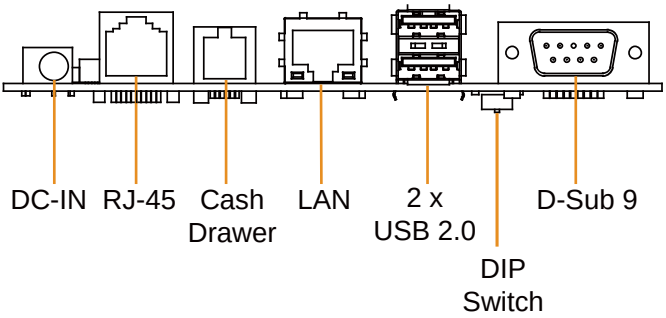

3.2.2 Tiltable Cradle I/O Ports Diagram

The I/O ports are located on the bottom left side of Tiltable Cradle.

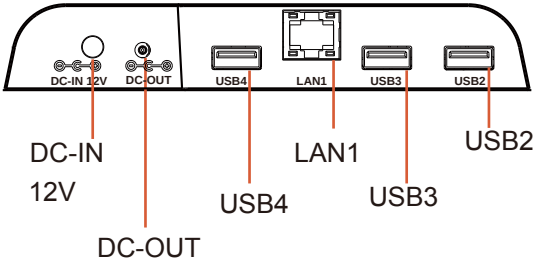

3.3 Pad Main Board Component Locations

3.3.1 Top View of Pad Main Board Component Locations

M/B: MB-5100

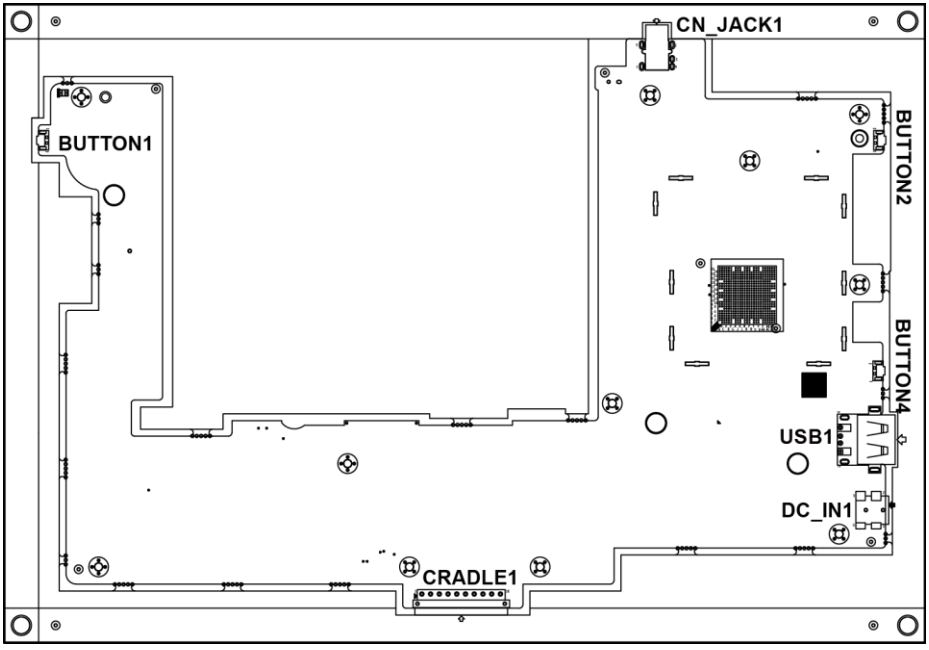

Figure 3-1. MB-5100 Main Board Component Locations (Top View)

	WARNING: Always disconnect the power cord when you are working with the connectors on the main board. Make sure both the system and the external devices are turned OFF as sudden surge of power could ruin sensitive components. Make sure MH-5100 is properly grounded.
	CAUTION: Observe precautions while handling electrostatic sensitive components. Make sure to ground yourself to prevent static charge while configuring the connectors. Use a grounding wrist strap and place all electronic components in any static-shielded devices.

3.3.2 Bottom View of Pad Main Board Component Locations

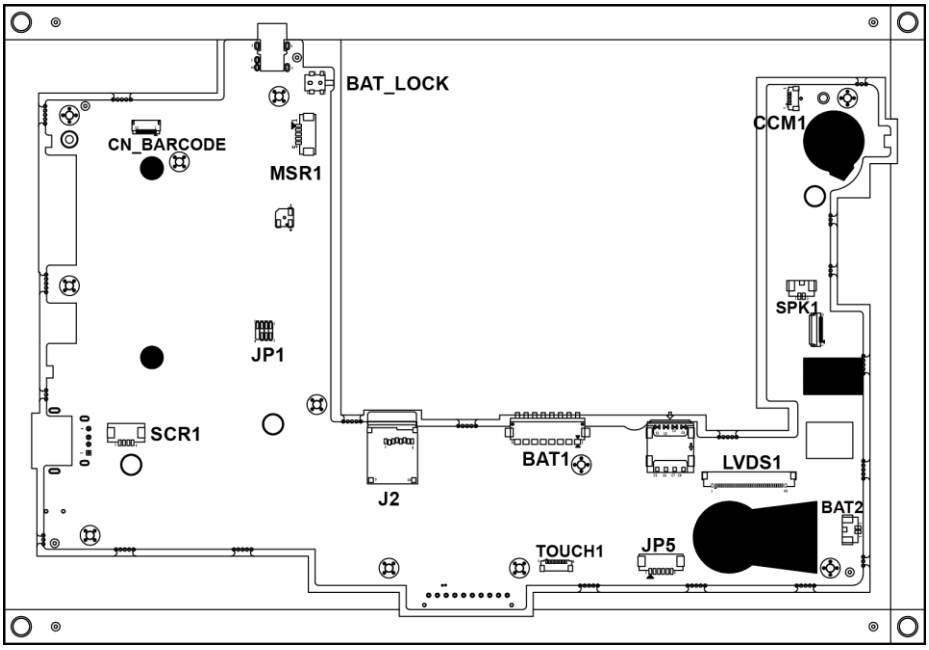

Figure 3-2. MB-5100 Main Board Component Locations (Bottom View)

3.4 Pad Main Board Connectors Quick Reference Table

CONNECTOR Description	NAME
Touch Screen Connector	TOUCH1
Flash Descriptor Override Selection (not used after MP)	JP1
LVDS Connector	LVDS1
RTC Battery Connector	BAT2
Earphone Jack Connector	CN_JACK1
Speaker Connector	SPK1
Barcode Connector	CN_BARCODE
Left Scan Button	BUTTON1
Right Scan Button	BUTTON2
Power Button	BUTTON4
Battery Connector	BAT1
DC IN Jack Connector	DC_IN1
Cradle Connector	CRADLE1
MCU F/W Update Connector	JP5
Battery Lock Switch Button	BAT_LOCK
MicroSD Card Connector	J2
CCD Front Camera Connector	CCM1
Universal Serial Bus 2.0 Connector	USB1
MSR Connector	MSR1
SCR Connector	SCR1

3.5 Setting Pad Main Board Connectors

3.5.1 Touch Panel Connector (TOUCH1)

Connector Location: TOUCH1 (rear side of mainboard)
Description: Touch Panel Connector

PIN	ASSIGNMENT
1	V3P3S_TCH
2	GND
3	GND
4	I2C2_Touch_SCL
5	I2C2_Touch_SDA
6	GND
7	TOUCH_INT_R
8	TOUCH_RST_R

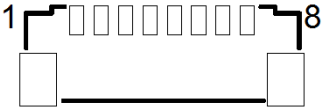

TOUCH1

3.5.2 Flash Descriptor Override Selection (JP1)

Connector Location: JP1 (rear side of mainboard)
Description: Flash BIOS Connector

PIN	ASSIGNMENT	PIN	ASSIGNMENT
1	SPI_VDD	2	GND
3	SPI_CS0J_R	4	SPI_CLK_R
5	SPI_MISO_R	6	SPI_MOSI_R
7	NC	8	-

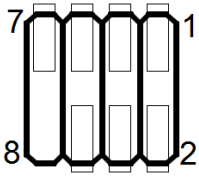

JP1

Note: The connector is not used after MP.

3.5.3 LVDS Connector (LVDS1)

Connector Location: LVDS1 (rear side of mainboard)
Description: LVDS (Low-Voltage Differential Signaling) Connector

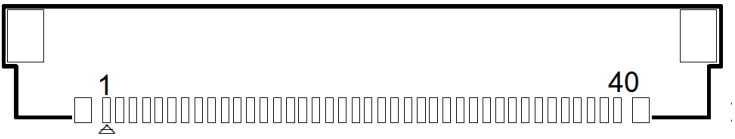

LVDS1

PIN	ASSIGNMENT
1	NC
2	LVDS_VCC
3	LVDS_VCC
4	NC
5	NC
6	NC
7	NC
8	LVDS_A_N0
9	LVDS_A_P0
10	GND
11	LVDS_A_N1
12	LVDS_A_P1
13	GND
14	LVDS_A_N2
15	LVDS_A_P2
16	GND
17	LVDS_A_CLK_N
18	LVDS_A_CLK_P
19	GND
20	LVDS_A_N3
21	LVDS_A_P3
22	GND
23	NC
24	NC
25	GND
26	NC
27	SEL
28	GND
29	NC

PIN	ASSIGNMENT
30	NC
31	GND
32	GND
33	GND
34	NC
35	LVDS_BKLT_CTRL
36	NC
37	NC
38	VLED
39	VLED
40	VLED

3.5.4 RTC Battery Connector (BAT2)

Connector Location: BAT2 (rear side of mainboard)
Description: RTC (Real-Time Clock) Battery Connector
The RTC battery provides power supply for the internal real-time clock and calendar.

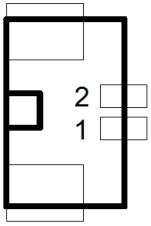

BAT2

PIN	ASSIGNMENT
2	GND
1	VCC

3.5.5 Earphone Jack Connector (CN_JACK1)

Connector Location: CN_JACK1 (top side of mainboard)
Description: Earphone Jack Connector

PIN	ASSIGNMENT	PIN	ASSIGNMENT
5	HP_DET	3	GND
2	RIGHT	1	LEFT
-	-	4	MIC

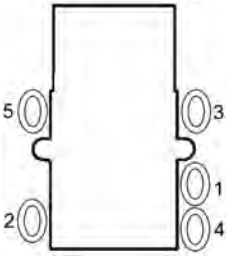

CN_JACK1

3.5.6 Speaker Connector (SPK1)

Connector Location: SPK1 (rear side of mainboard)
Description: Speaker Connector

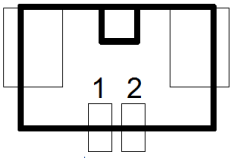

SPK1

PIN	ASSIGNMENT	PIN	ASSIGNMENT
1	LEFT_SPK	2	RIGHT_SPK

3.5.7 Barcode Scanner Connector (CN_BARCODE)

Connector Location: CN_BARCODE (rear side of mainboard)
Description: Barcode Scanner Connector

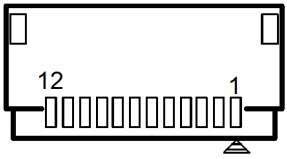

CN_BARCODE

PIN	ASSIGNMENT
1	NC
2	VCC3_3
3	GND
4	RXD
5	TXD
6	CTS
7	RTS
8	Power Down
9	Buzzer
10	LED_Output
11	Wake up
12	Trigger

3.5.8 Left Scan Button (BUTTON1)

Connector Location: BUTTON1 (top side of mainboard)
Description: Left Scan Button

PIN	ASSIGNMENT
1	GND
2	SCAN_EN_SW

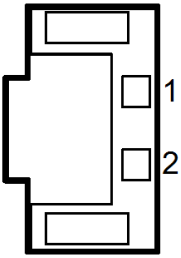

BUTTON1

3.5.9 Right Scan Button (BUTTON2)

Connector Location: BUTTON2 (top side of mainboard)
Description: Right Scan Button

PIN	ASSIGNMENT
1	GND
2	SCAN_EN_SW

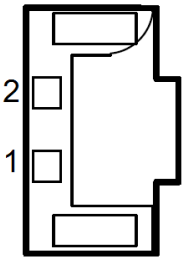

BUTTON2

3.5.10 Power Button (BUTTON4)

Connector Location: BUTTON4 (top side of mainboard)
Description: Power Button

PIN	ASSIGNMENT
2	PWRBTN_N
1	GND

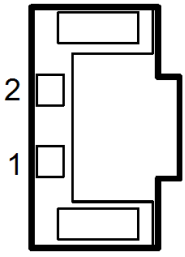

BUTTON4

3.5.11 Battery Connector (BAT1)

Connector Location: BAT1 (rear side of mainboard)
Description: Battery Connector

PIN	ASSIGNMENT
1	BT+
2	BT+
3	BAT1_SENSE
4	BAT_DET
5	GND
6	BAT_SCL
7	BAT_SDA
8	GND

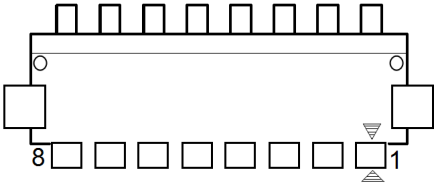

BAT1

3.5.12 DC IN Jack Connector (DC_IN1)

Connector Location: DC_IN1 (top side of mainboard)
Description: DC IN Jack Connector

PIN	ASSIGNMENT	PIN	ASSIGNMENT
3	GND	2	GND
0	DC	1	DC

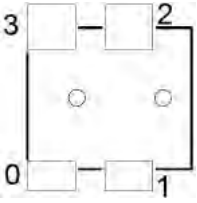

DC_IN1

3.5.13 Cradle Connector (CRADLE1)

Connector Location: CRADLE1 (top side of mainboard)
Description: Cradle Connector

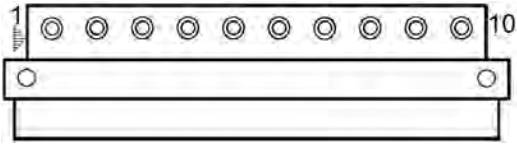

CRADLE1

PIN	ASSIGNMENT
1	GND
2	CRA_DCIN
3	CRA_DCIN
4	GND
5	USB_DP
6	USB_DP
7	USB_DN
8	USB_DN
9	V5P0S
10	GND

3.5.14 MCU F/W Update Connector (JP5)

Connector Location: JP5 (rear side of mainboard)
Description: MCU Firmware Update Connector

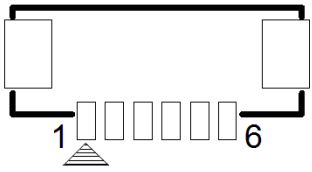

JP5

PIN	ASSIGNMENT
1	MCU_MISO
2	MCU_ADC
3	MCU_SCK
4	MCU_MOSI
5	MCU_RST
6	GND

3.5.15 Battery Lock Switch Button (BAT_LOCK)

Connector Location: BAT_LOCK (rear side of mainboard)
Description: Battery Lock Switch Button

PIN	ASSIGNMENT	PIN	ASSIGNMENT
3	NC	1	GND
4	NC	2	BAT_LOCK

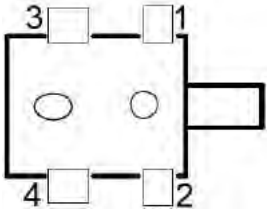

BAT_LOCK

3.5.16 MicroSD Card Connector (J2)

Connector Location: J2 (rear side of mainboard)
Description: MicroSD (Secure Digital) Card Connector

PIN	ASSIGNMENT
1	DAT2
2	CD/DAT3
3	CMD
4	VDD
5	CLK
6	GND
7	DATA0
8	DAT1
9	CARD DETECT
10	GND

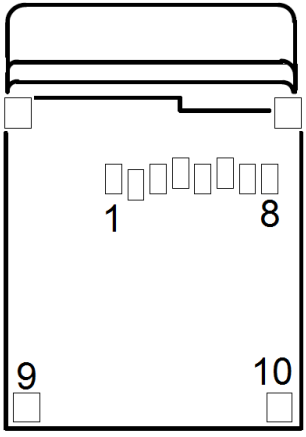

J2

3.5.17 CCD Front Camera Connector (CCM1)

Connector Location: CCM1 (rear side of mainboard)
Description: CCD (Charge-coupled Device) Front Camera Connector

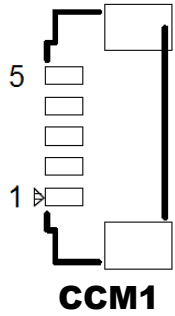

PIN	ASSIGNMENT
5	GND
4	GND
3	CCM_DP
2	CCM_DN
1	VCAM

3.5.18 USB 2.0 Connector (USB1)

Connector Location: USB1 (top side of mainboard)
Description: USB 2.0 Connector

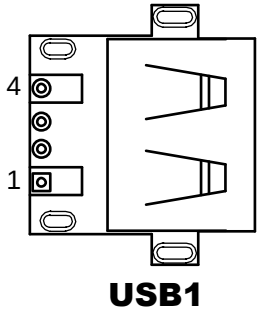

PIN	ASSIGNMENT
4	GND
3	USB_DP
2	USB_DN
1	VCC

3.5.19 MSR Connector (MSR1)

Connector Location: MSR1 (rear side of mainboard)
Description: MSR (Magnetic-Stripe Card Reader) Connector

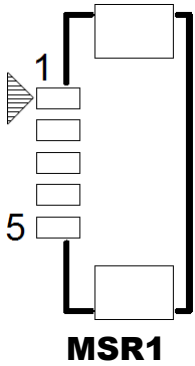

PIN	ASSIGNMENT
1	VCC
2	MSR_DN
3	MSR_DP
4	GND
5	GND

3.5.20 SCR Connector (SCR1)

Connector Location: SCR1 (rear side of mainboard)
Description: SCR Connector

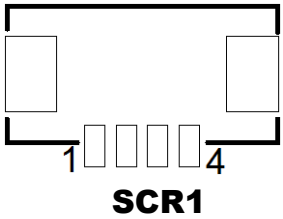

PIN	ASSIGNMENT
1	VCC
2	SCR_DN
3	SCR_DP
4	GND

3.6 Daughter Board Connectors & Jumpers Quick Reference Table

MR-5100RA-1 Connectors List (for Tiltable Cradle)

CONNECTOR Description	NAME
DC IN Jack Connector	DC_IN1
DC OUT Jack Connector	DC_OUT
Universal Serial Bus 2.0 Connector	USB1
Universal Serial Bus 2.0 Connector	USB2
Universal Serial Bus 2.0 Connector	USB3
Universal Serial Bus 2.0 Connector	USB4
Local Area Network Connector	LAN1

MR-5100RA-2 Connector List (for Lite Cradle)

CONNECTOR Description	NAME
Lite Cradle Connector / Tiltable Cradle Connector	CRADLE1

MR-5100RA-5 Connectors List (For Lite Cradle)

CONNECTOR Description	NAME
COM Port Connector (RJ45)	COM1
COM Port Connector (D-Sub 9)	COM2
Universal Serial Bus 2.0 Connector (Dual Layers)	USB1
Cash Drawer Connector	DRW1
Local Area Network Connector	LAN1
DC IN Jack Connector	DC_IN1
LAN & Cash Drawer Function Switch (MR-5100RA-5 Bottom Side)	SW1

MR-5100RA-5 Jumpers List (For Lite Cradle)

JUMPER Description	NAME
COM1 Port Pin9 Definition Selection Guide (MR-5100RA-5)	JP_COM1
COM2 Port Pin9 Definition Selection Guide (MR-5100RA-5)	JP_COM2

MR-5100RA-3 Connectors List (for External Barcode Scanner (optional))

CONNECTOR Description	NAME
Barcode Scanner Connector	CN_BARCODE1
Barcode Scanner Connector	CN_BARCODE2
Trigger Connector	JP1
Trigger Connector	JP2

MR-5100RA-8 Connectors List (for Scan Button)

CONNECTOR Description	NAME
Barcode Scanner Function Switch Connector	SW1
Trigger Connector	JP1
Trigger Connector	JP2

3.7 Daughter Board MR-5100RA-1 Connectors Location

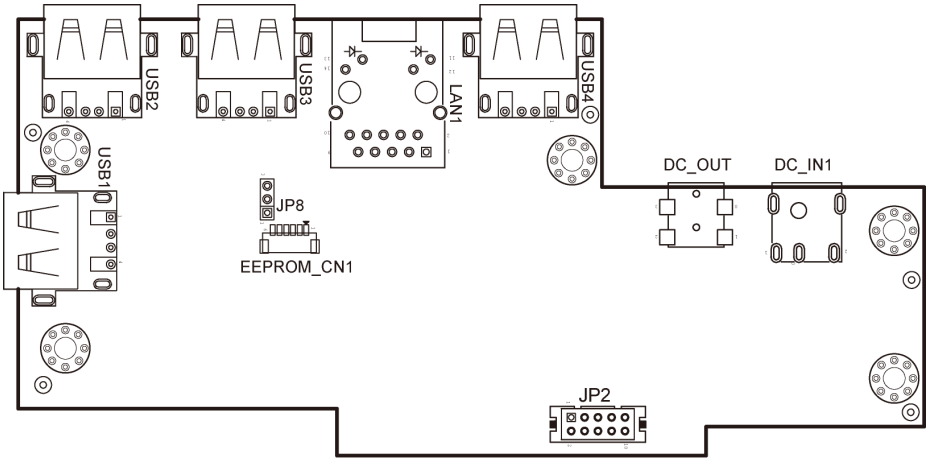

Figure 3-3. MR-5100RA-1 Daughter Board Component Locations (Top View)

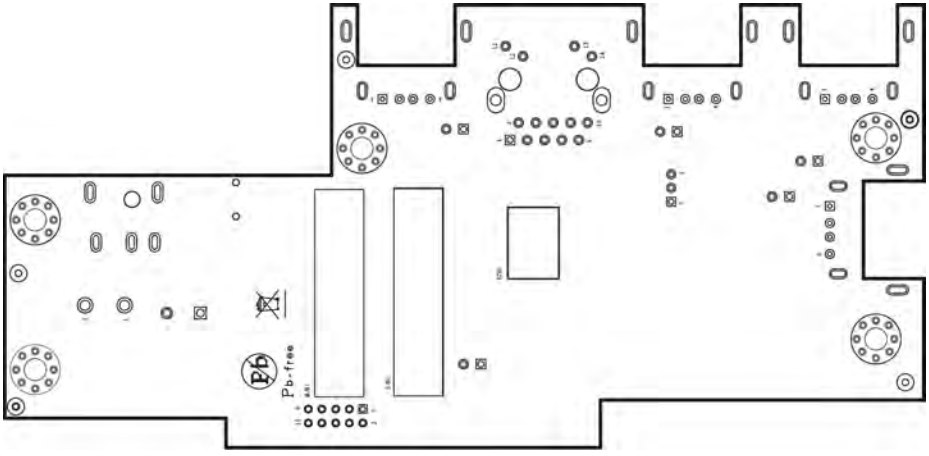

Figure 3-4. MR-5100RA-1 Daughter Board Component Locations (Bottom View)

3.8 Setting Daughter Board MR-5100RA-1 Connectors

3.8.1 DC IN Jack Connector (DC_IN1)

Connector Location: DC_IN1
Description: DC IN Jack Connector. The DC_IN1 port is located on the bottom left side of Tiltable Cradle.

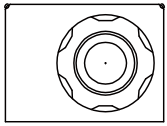

DC_IN1

PIN	ASSIGNMENT
0	VCC12V
1	GND

3.8.2 DC Out Jack Connector (DC_OUT)

Connector Location: DC_OUT
Description: DC Out Jack Connector. The DC_OUT port is located on the bottom left side of Tiltable Cradle.

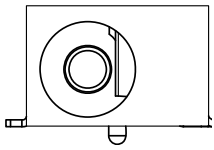

DC_OUT

PIN	ASSIGNMENT
0	VCC8.4V
1	GND

3.8.3 Universal Serial Bus 2.0 Connector (USB1)

Connector Location: USB1
Description: USB 2.0 Connector. The USB1 port is located on the bottom front of Tiltable Cradle.

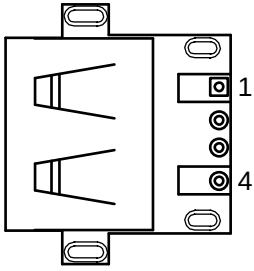

USB1

PIN	ASSIGNMENT
1	VCC5V
2	D-
3	D+
4	GND

3.8.4 Universal Serial Bus 2.0 Connector (USB2)

Connector Location: USB2

Description: USB 2.0 Connector. The USB2 port is located on the bottom left side of Tiltable Cradle.

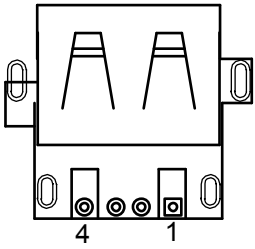

USB2

PIN	ASSIGNMENT
1	VCC5V
2	D-
3	D+
4	GND

3.8.5 Universal Serial Bus 2.0 Connector (USB3)

Connector Location: USB3

Description: USB 2.0 Connector. The USB3 port is located on the bottom left side of Tiltable Cradle.

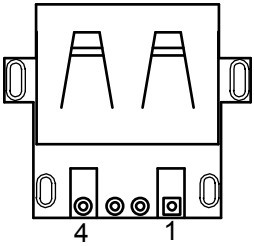

USB3

PIN	ASSIGNMENT
1	VCC5V
2	D-
3	D+
4	GND
5	Shield

3.8.6 Universal Serial Bus 2.0 Connector (USB4)

Connector Location: USB4

Description: USB 2.0 Connector. The USB4 port is located on the bottom left side of Tiltable Cradle.

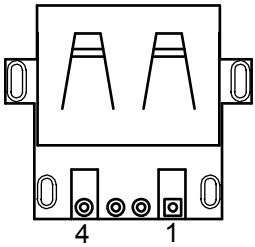

USB4

PIN	ASSIGNMENT
1	VCC5V
2	D-
3	D+
4	GND

3.8.7 LAN Port (LAN1)

Port Name: LAN1

Description: LAN RJ-45 Port (bottom left I/O)

PIN	ASSIGNMENT
1	MDIP0
2	MDIN0
3	MDIP1
4	MDIN1
5	MDIP2
6	MDIN2
7	MDIP3
8	MDIN3

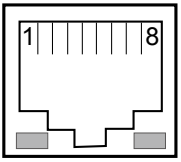

Green **Yellow**

LAN1

LAN LED Indicator:

Right Side LED

Yellow Color Blinking	LAN Message Active
Off	No LAN Message Active

Left Side LED

Green Color On	10/100Mbps LAN Speed Indicator
Orange Color on	Giga LAN Speed Indicator
Off	No LAN switch/ hub connected.

3.9 Daughter Board MR-5100RA-2 Connectors Location

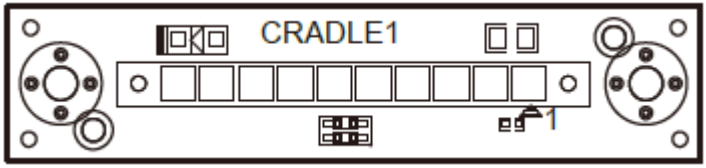

Figure 3-5. MR-5100RA-2 Daughter Board Component Locations (Top View)

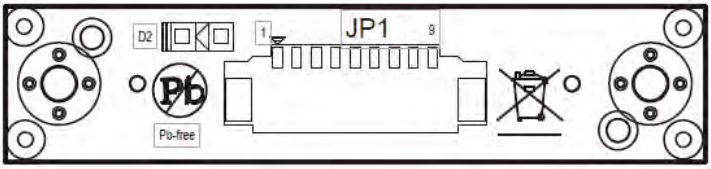

Figure 3-6. MR-5100RA-2 Daughter Board Component Locations (Bottom View)

3.10 Setting Daughter Board MR-5100RA-2 Connector

3.10.1 Lite Cradle / Tiltable Cradle Connector (CRADLE1)

Connector Location: CRADLE1

Description: Lite Cradle / Tiltable Cradle Connector

CRADLE1

PIN	ASSIGNMENT
1	GND
2	CRA_DCIN
3	CRA_DCIN
4	GND
5	USB_DP
6	USB_DP
7	USB_DN
8	USB_DN
9	V5P0S
10	GND

3.11 Daughter Board MR-5100RA-3 Connectors Location

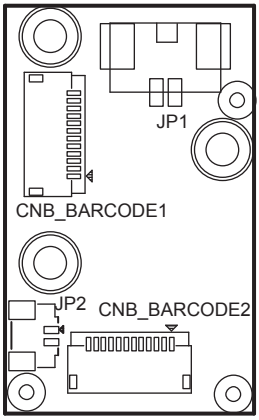

Figure 3-7. MR-5100RA-3 Daughter Board Component Locations (Top View)

3.12 Setting Daughter Board MR-5100RA-3 Connectors

3.12.1 Barcode Scanner Connector (CN_BARCODE1)

Connector Location: CN_BARCODE1

Description: Barcode Scanner Connector

PIN	ASSIGNMENT
1	NC
2	VCC3_3
3	GND
4	RXD
5	TXD
6	CTS
7	RTS
8	Power Down
9	Buzzer
10	LED_Output
11	Wake up
12	Trigger

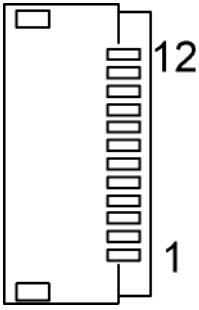

CN_BARCODE1

3.12.2 Bar Code Scanner Connector (CN_BARCODE2)

Connector Location: CN_BARCODE2

Description: Barcode Scanner Connector

PIN	ASSIGNMENT
1	NC
2	VCC3_3
3	GND
4	RXD
5	TXD
6	CTS
7	RTS
8	Power Down
9	Buzzer
10	LED_Output
11	Wake up
12	Trigger

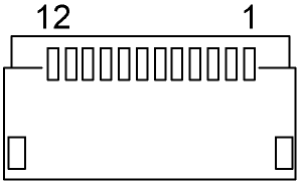

CN_BARCODE2

3.12.3 Trigger Connector (JP1)

Connector Location: JP1

Description: Trigger Connector

PIN	ASSIGNMENT
1	Trigger
2	GND

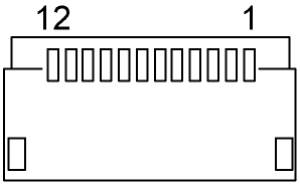

JP1

3.12.4 Trigger Connector (JP2)

Connector Location: JP2

Description: Trigger Connector

PIN	ASSIGNMENT
1	Trigger
2	GND

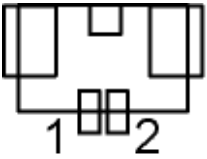

JP2

3.13 Daughter Board MR-5100RA-5 Connectors & Jumpers Location

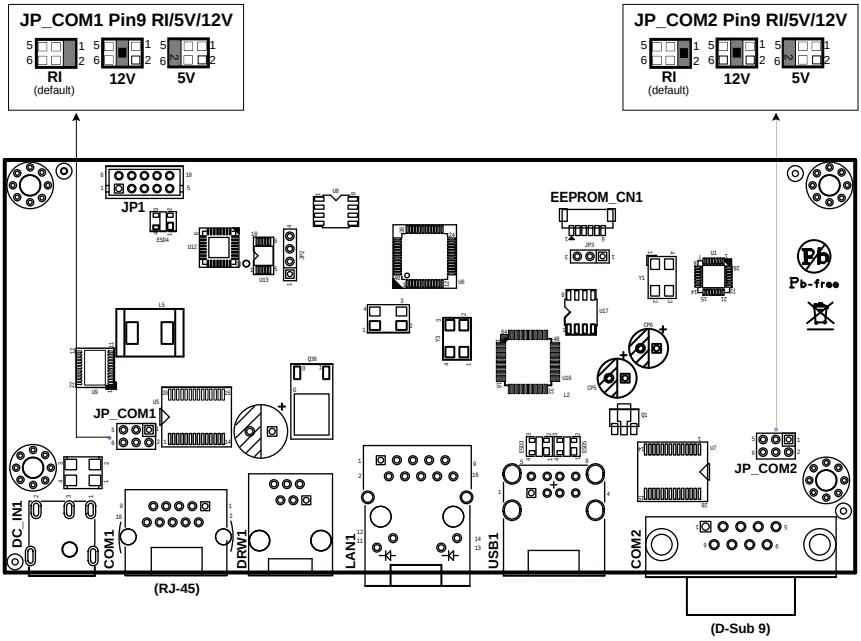

Note: When the Lite Cradle is joined with Integrated Pad, the COM2 and COM3 ports shown on Pad system are actually COM1 and COM2 ports of the daughter board respectively, because the Lite Cradle's COM ports are deployed according to OS Image built by Protech and COM1 port placement has been used by Pad system.

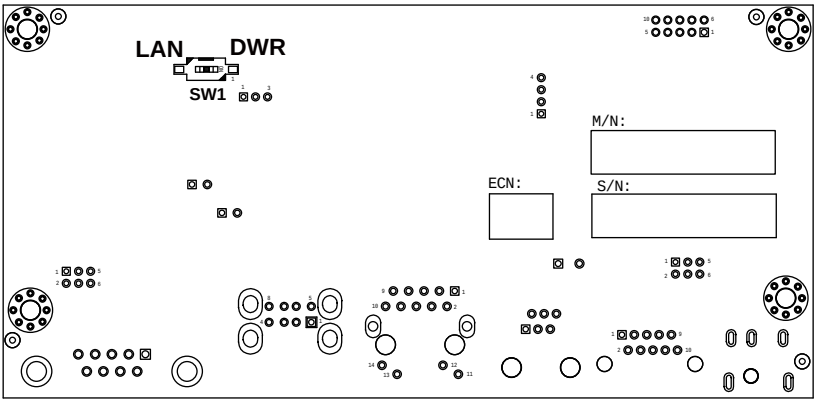

Figure 3-8. MR-5100RA-5 Daughter Board Component Locations (Bottom View)

3.14 Setting Daughter Board MR-5100RA-5 Connectors and Jumpers

3.14.1 COM1, COM2 Port Pin9 Definition Selection Guide (JP_COM1 and JP_COM2)

Jumper Location: JP_COM1 and JP_COM2

Description: COM1, COM2 Port Pin9 RI/+5V/+12V Selection

SELECTION	JUMPER SETTING	JUMPER ILLUSTRATION	
RI	***1-2 (Default Setting)***	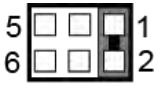 **JP_COM1**	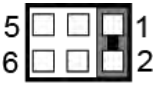 **JP_COM2**
12V	3-4	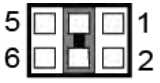 **JP_COM1**	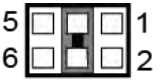 **JP_COM2**
5V	5-6	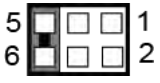 **JP_COM1**	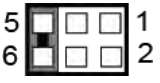 **JP_COM2**

3.14.2 RJ-45 COM Port (COM1)

COM1(RS-232, RJ-45) Connector Pin Assignment

PIN	ASSIGNMENT	PIN	ASSIGNMENT
1	DCD	6	DSR
2	RXD	7	RTS
3	TXD	8	CTS
4	DTR	9	RI/5V/12V
5	GND	-	

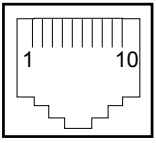

COM1

Note: COM1 Pin 9 is selectable for RI, +5V or +12V by jumper setting. Default setting is RI. Please see "**COM1, COM2 Port Pin9 Definition Selection Guide**" section for selection details.

3.14.3 D-Sub 9 COM Port (COM2)

COM2(RS-232, D-Sub 9) Connector Pin Assignment:

PIN	ASSIGNMENT	PIN	ASSIGNMENT
1	DCD	6	DSR
2	RXD	7	RTS
3	TXD	8	CTS
4	DTR	9	RI/5V/12V
5	GND	-	

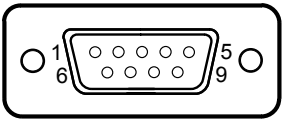

COM2

Note: COM2 Pin 9 is selectable for RI, +5V or +12V by jumper setting. Default setting is RI. Please see "**COM1, COM2 Port Pin9 Definition Selection Guide**" section for selection details.

3.14.4 DC-IN Port (DC_IN1)

Port Name: DC_IN1

Description: DC Power-In Port. The DC-IN Port is located on the bottom side of Lite Cradle.

PIN	ASSIGNMENT
1	VCC12V
2	GND
3	GND

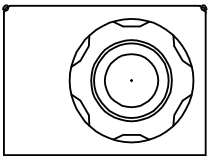

DC_IN1

3.14.5 Dual USB Ports

Port Name: USB1

Description: Dual USB 2.0 Type A Connectors

PIN	ASSIGNMENT	PIN	ASSIGNMENT
1	VCC5V	5	VCC5V
2	USB_DN	6	USB_DN
3	USB_DP	7	USB_DP
4	GND	8	GND

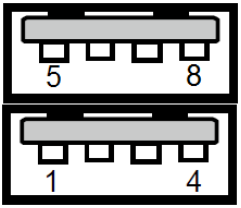

USB1

Note: The top USB 2.0 connector pin assignments are the same as the one below.

3.14.6 Local Area Network (LAN) Port (LAN1)

Port Name: LAN1

Description: a Giga LAN RJ-45 Port

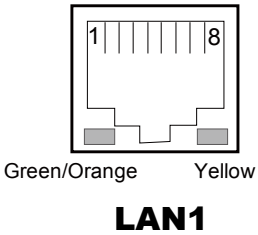

PIN	ASSIGNMENT
1	MX0+
2	MX0-
3	MX1+
4	MX1-
5	CT1
6	CT2
7	NC
8	NC
9	NC
10	NC
11	SPEED_LED
12	VCC3.3V
13	LINK_ACT_LED
14	VCC3.3V

LAN LED Status

There are 2 LAN LED indicators for LAN on the bottom side of the Lite Cradle. By observing their status, you can know the status of the Ethernet connection.

LAN LED Indicator	Color	Status	Description
Left Side LED	Orange	Blink	Giga LAN connection is activated.
	Green	Blink	10/100Mbps LAN connection is activated.
Right Side LED	Green	On	LAN switch/hub connected.

3.14.7 Cash Drawer Port (DRW1)

Port Name: DRW1

Description: RJ-11 Cash Drawer Port

PIN	ASSIGNMENT
1	GND
2	DRAWER_OPEN
3	DRAWER_SENSE
4	VCC12V
5	NC
6	GND

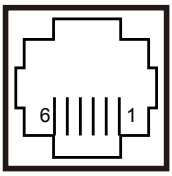

DRW1

3.14.8 LAN & Cash Drawer Function Switch (SW1)

Connector Name: SW1

Description: LAN Port and Cash Drawer function selection

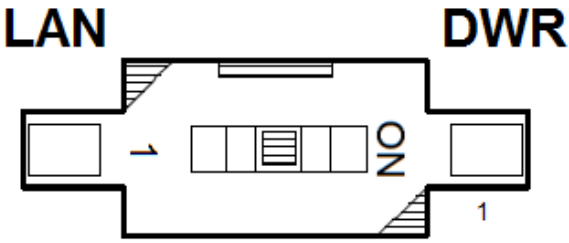

SW1

PIN	ASSIGNMENT
1	CASH DRAWER
2	LAN

Note: Users need to use a ball point pen or a pin to toggle the DIP switch.
Default: LAN

3.15 Daughter Board MR-5100RA-8 Connectors Location

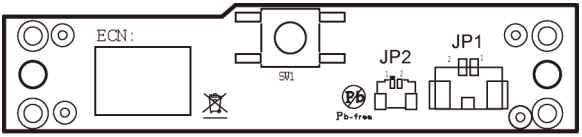

Figure 3-9. MR-5100RA-8 Daughter Board Component Locations (Top View)

3.16 Setting Daughter Board MR-5100RA-8 Connectors

3.16.1 Barcode Scanner Function Switch Connector (SW1)

Connector Location: SW1

Description: Barcode Scanner Function Switch Connector

PIN	ASSIGNMENT
Click	Trigger
Release	Normal

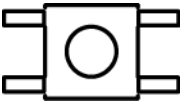

SW1

3.16.2 Trigger Connector (JP1)

Connector Location: JP1

Description: Trigger Connector

PIN	ASSIGNMENT
1	Trigger
2	GND

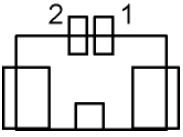

JP1

3.16.3 Trigger Connector (JP2)

Connector Location: JP2

Description: Trigger Connector

PIN	ASSIGNMENT
1	Trigger
2	GND

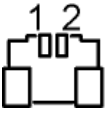

JP2

4 Software Utilities

This chapter provides the detailed information that guides users to install driver utilities for the system. The following topics are included:

- Installing Intel® Chipset Software Installation Utility
- Installing Audio Realtek Software Installation Utility
- Installing G-Sensor Software Installation Utility
- Installing Bluetooth Software Installation Utility
- Cash Drawer API Reference

4.1 Introduction

MH-5100 Driver Utilities have been stored in the Integrated Pad system:

File Path: C:\MH-5100_v1.0

Filename (Assume that drive is C:)	Purpose	Win10 32-bit OS
C:\MH-5100_v1.0\DRIVER\Platform\1_Main Chip\Win10-32Bit	Intel® Chipset Device Software installer (Audio & BM& DPTF & GFX & GPIO & GPIO & I2C & MBI & PMIC & Sensor & TXEI & UART & WCE & TXE)	✓
C:\MH-5100_v1.0\DRIVER\Platform\2_Audio\Win10-32Bit	Realtek High Definition Audio System Software	✓
C:\MH-5100_v1.0\DRIVER\Device\3_G-sensor\Win10-32Bit	ST Microelectronics 3 Axis Digital Accelerometer Installer	✓
C:\MH-5100_v1.0\DRIVER\Platform\4_BlueTooth\Win10-32Bit	USI WM-BAN-BM-10_LS Bluetooth v4.0 Software	✓

✓: Support

Note: After the OS installation is completed, the driver utilities will also be installed at the same time.

4.2 Installing Intel® Chipset Software Installation Utility

Introduction

The Intel® Chipset Software Installation Utility installs the Windows *.INF files to the target system. These files outline to the operating system how to configure the Intel chipset components in order to ensure that the following functions work properly:

- Core PCI and ISAPNP Services
- PCIe Support
- SATA Storage Support
- USB Support
- Identification of Intel® Chipset Components in the Device Manager

The utility pack is to be installed only for Windows® 10 series (32-bit). Please follow the steps below to install:

1 Enter the **C:\MH-5100_v1.0 > DRIVER > Platform > 1_Main Chip > Win10-32Bit > Installer > PlatformInstaller** folder where the Chipset driver is located.

2 Click **Setup.exe** file for driver installation.

3 Follow the on-screen instructions to install the driver.

4 Enter the **C:\MH-5100_v1.0 > DRIVER > Platform> 1_Main Chip > Win10-32Bit > Installer > SecInstaller** folder.

5 Click **SetupTXE.exe** file for driver installation.

6 Follow the on-screen instructions to install the driver.

7 Once the installation is completed, restart MH-5100 for the changes to take effect.

After the Chipset driver is installed, the following driver utilities will also be installed at the same time:

- Audio driver utility
- BM driver utility
- DPTF driver utility
- GFX driver utility
- GPIO driver utility
- GPIOVirtual driver utility
- I2C driver utility
- MBI driver utility
- PMIC driver utility
- Sensor driver utility
- TXEI driver utility
- UART driver utility
- WCE driver utility

For more details on the installation procedure, refer to the **MH-5100 README V1.0.pdf** file located under **C:\MH-5100_v1.0**.

4.3 Installing Audio Realtek Software Installation Utility

After the default Audio driver utility has been installed in the procedure above, it will not function until you have installed Realtek ALC5640-VB-CG driver utilities. Please follow the steps below:

1 Enter the **C:\MH-5100_v1.0 > DRIVER > Platform > 2_Audio > Win10-32Bit > RTK_6_2_9600_4239_WHQL > x86** folder where the Audio Realtek ALC5640-VB-CG driver is located, and **rtii2sac.inf** file will be installed automatically.

2 From the bottom left corner of MH-5100 Pad, select Start icon **> Windows System > Control Panel > Device Manager** to enter the Device Manager window, and select **DESKTOP-DMA0BT4 > Sound, video and game controllers > Realtek I2S Audio Codec**.

Device Manager
File
Action
View
Help
DESKTOP-DMA0BT4
Audio inputs and outputs
Batteries
Bluetooth
Computer
Disk drives
Display adapters
Firmware
Human Interface Devices
Imaging devices
Keyboards
Mice and other pointing devices
Monitors
Multi-port serial adapters
Network adapters
Ports (COM & LPT)
Print queues
Processors
SD host adapters
Sensors
Software devices
Sound, video and game controllers
Bluetooth Stereo Audio
Intel SST Audio Device (WDM)
Realtek I2S Audio Codec
Storage controllers

3 From **Realtek I2S Audio Codec Properties** window, click **Update Driver…** from the **Driver** tab to start updating the audio driver software for MH-5100.

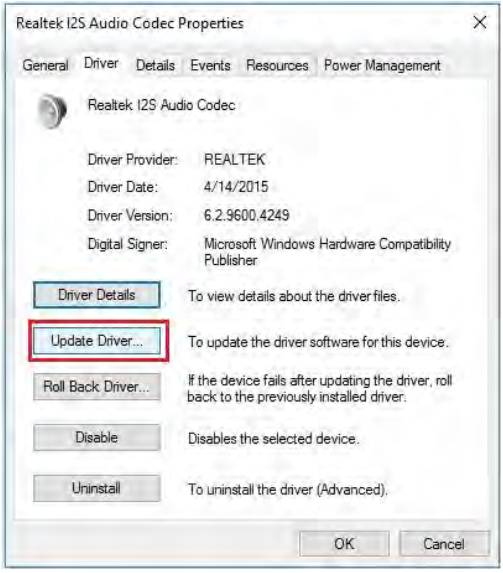

4 Click **Browse my computer for driver software** item.

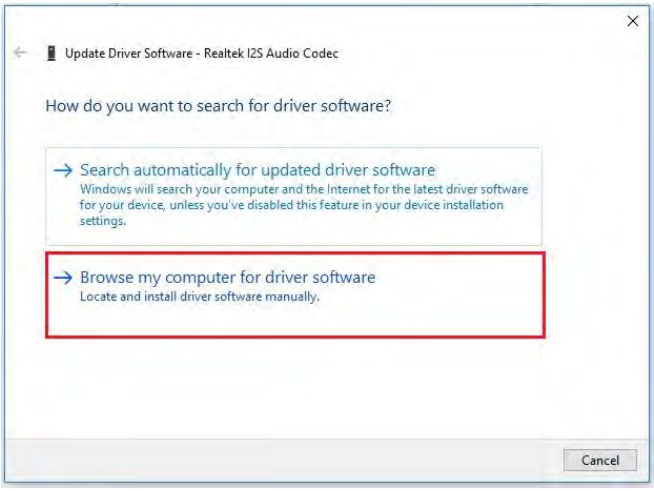

5 Click **Let me pick from a list of device drivers on my computer**.

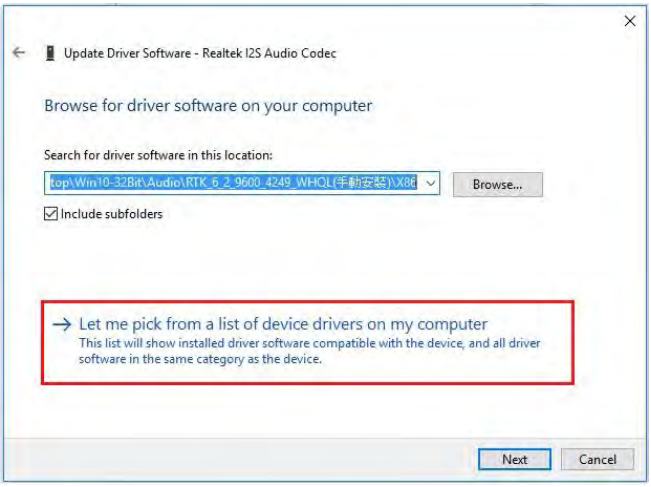

6 Click **Have Disk…**.

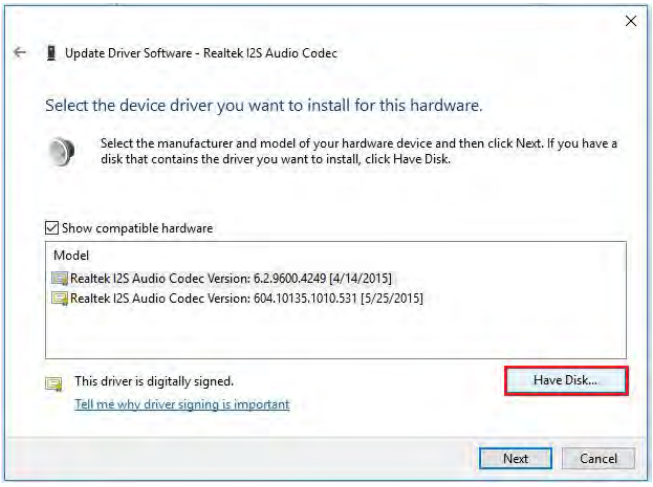

7 Click **Browse...** button to browse for the file directory where the Realtek I2S Audio Codec installation driver is located.

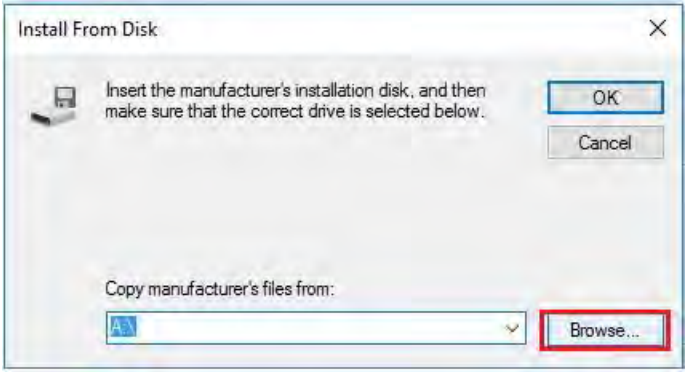

8 Select **C:\MH-5100_v1.0 > DRIVER > Platform > 2_Audio > Win10-32Bit > RTK_6_2_9600_4239_WHQL> x86**, select **rtii2sac.inf** file and click **Open** to open the file.

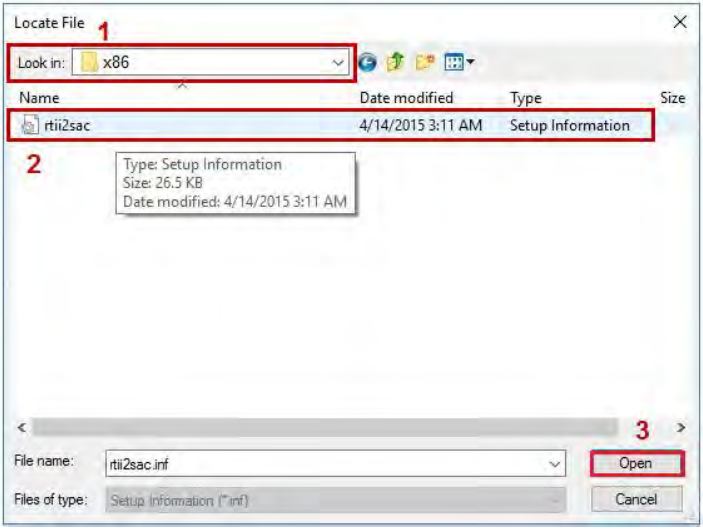

9 Click **OK**.

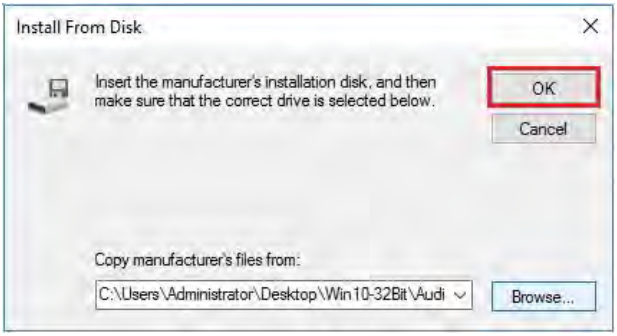

10 Click **Next** to continue the installation.

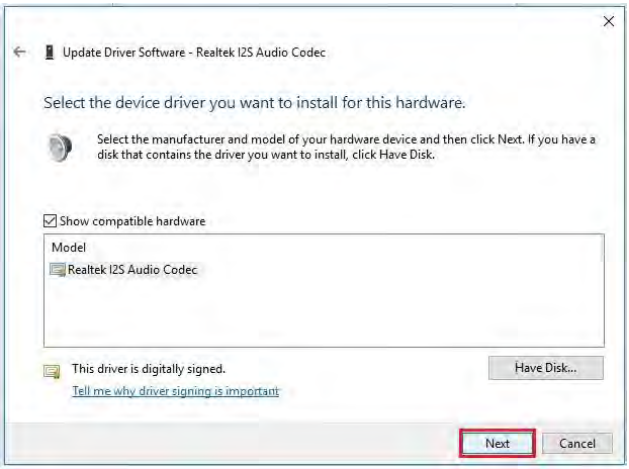

11 Windows has finished installing Realtek I2S Audio Codec driver software. Click **Close** to complete.

12 Go to **Realtek I2S Audio Codec Properties** window and select **Driver** tab, and you will see the Realtek audio driver utility has been updated. Click **Close** to exit.

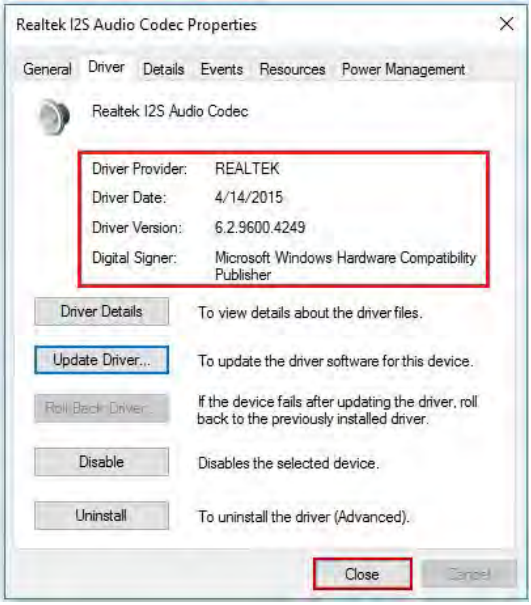

13 Once the installation is completed, restart MH-5100 for the changes to take effect, and the audio function can start to work normally.

4.4 Installing G-Sensor Software Installation Utility

The G-Sensor driver utility provided allows users to turn the touch screen horizontally or vertically. Please follow the steps below to install G-Sensor driver utilities:

1 Enter the **C:\MH-5100_v1.0 >DRIVER > Platform > 3_G-sensor > Win10-32Bit > 1_4.22.0063_signed(STEP-1)** folder.

2 Click **setup.exe** file for driver installation.

3 Follow the on-screen instructions to install the driver.

4 Enter the **C:\MH-5100_v1.0 > DRIVER > Platform > 3_G-sensor > Win10-32Bit > 2_Accel_SPB_SensorAPI_2.8.1.10(STEP-2) > x86** folder, and the **ST_Accel.inf** file will be installed automatically.

5 From the bottom left corner of MH-5100 Pad, select Start icon **> Windows System > Control Panel > Device Manager** to enter the Device Manager window, and select **DESKTOP-DMA0BT4 > Sensors > STMicroelectronics 3-Axis Digital Accelerometer**.

Device Manager
File
Action
View
Help
DESKTOP-DMA0BT4
Audio inputs and outputs
Batteries
Bluetooth
Computer
Disk drives
Display adapters
Firmware
Human Interface Devices
Imaging devices
Keyboards
Mice and other pointing devices
Monitors
Multi-port serial adapters
Network adapters
Ports (COM & LPT)
Print queues
Processors
SD host adapters
Sensors
STMicroelectronics 3-Axis Digital Accelerometer
Software devices

6 From **STMicroelectronics 3-Axis Digital Accelerometer Properties** window, click **Update Driver…** from the **Driver** tab to start install the G-sensor driver software for MH-5100.

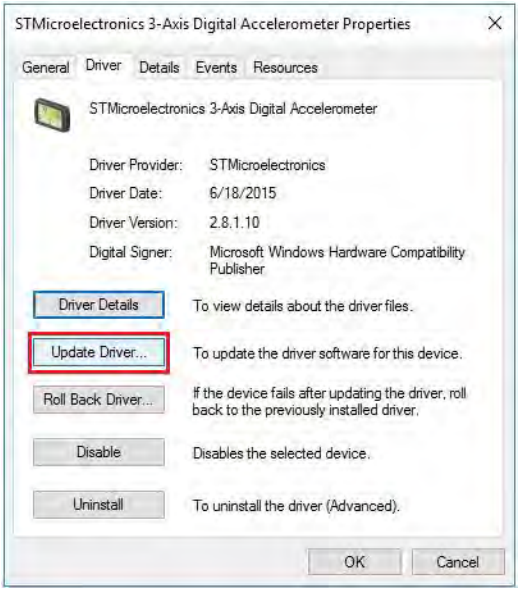

7 Click **Browse my computer for driver software** item.

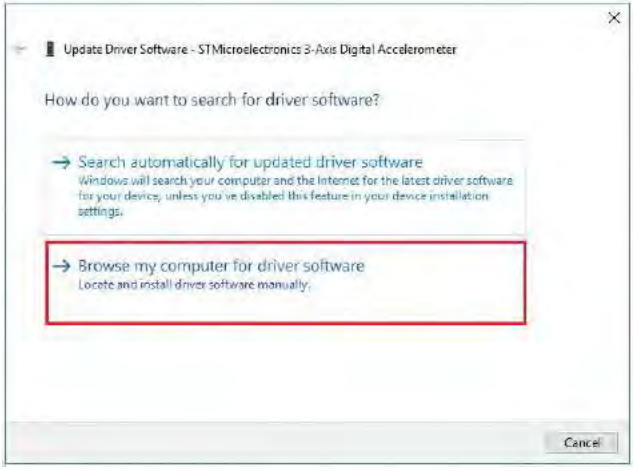

8 Click **Let me pick from a list of device drivers on my computer**.

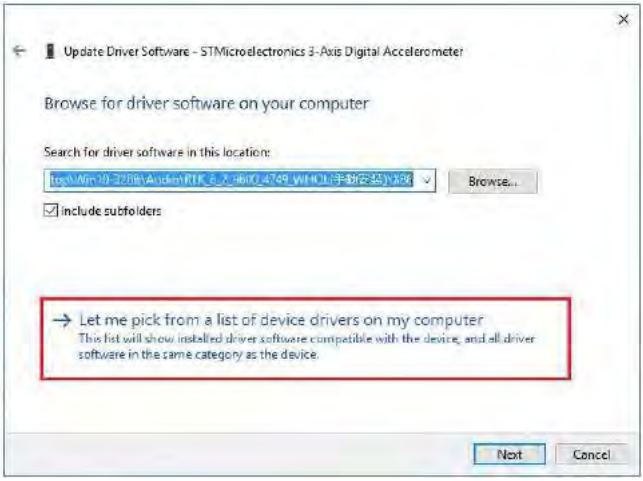

9 Click **Have Disk…** button.

10 Click **Browse…** button to browse for the file directory where the G-sensor installation driver is located.

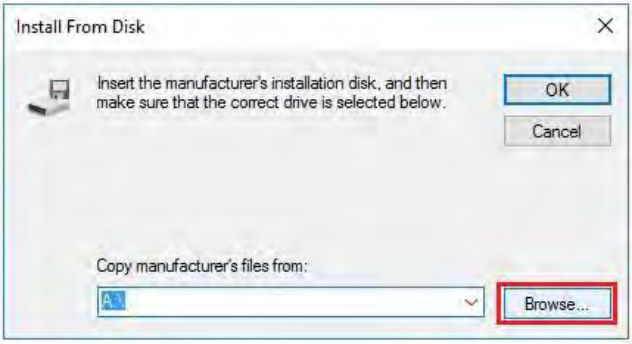

11 Select **C:\MH-5100_v1.0 > DRIVER > Device > G-sensor > Win10-32Bit >2_Accel_SPB_SensorAPI_2.8.1.10(STEP-2) > x86** folder from the **Look in** drop-down box, and select **ST_Accel.inf** file. Click **Open** to open the file.

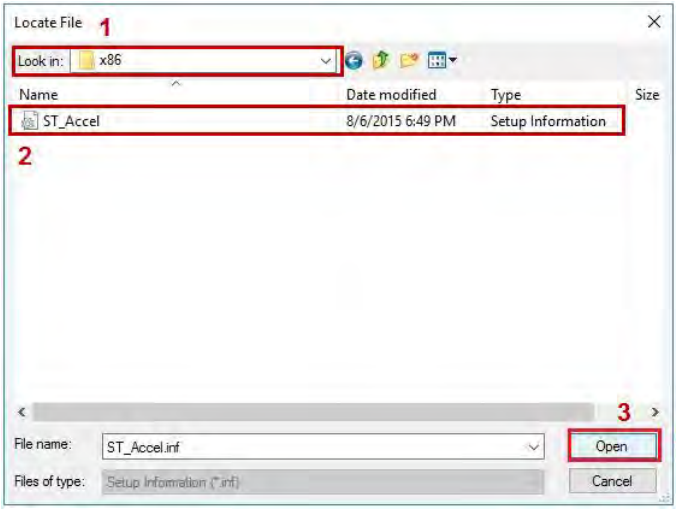

12 Click **OK**.

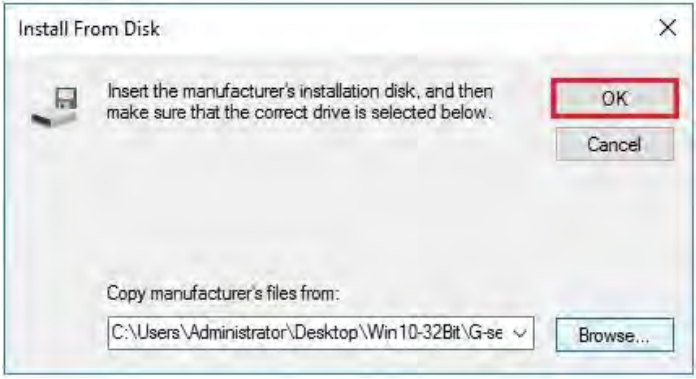

13 Click **Next** to continue the installation.

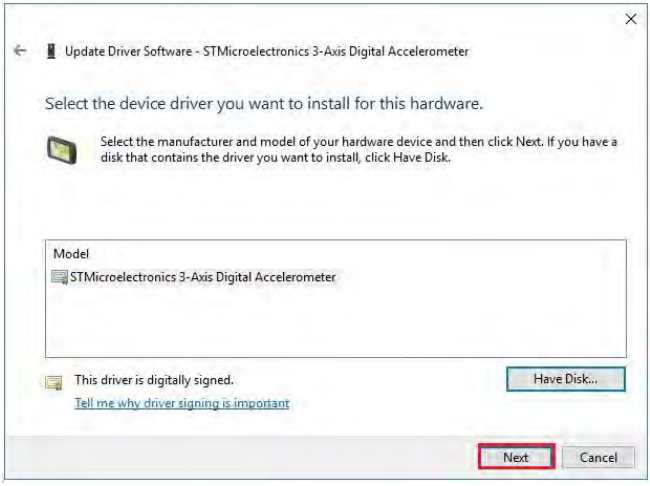

14 Windows has finished installing G-sensor driver software.
Click **Close** to complete.

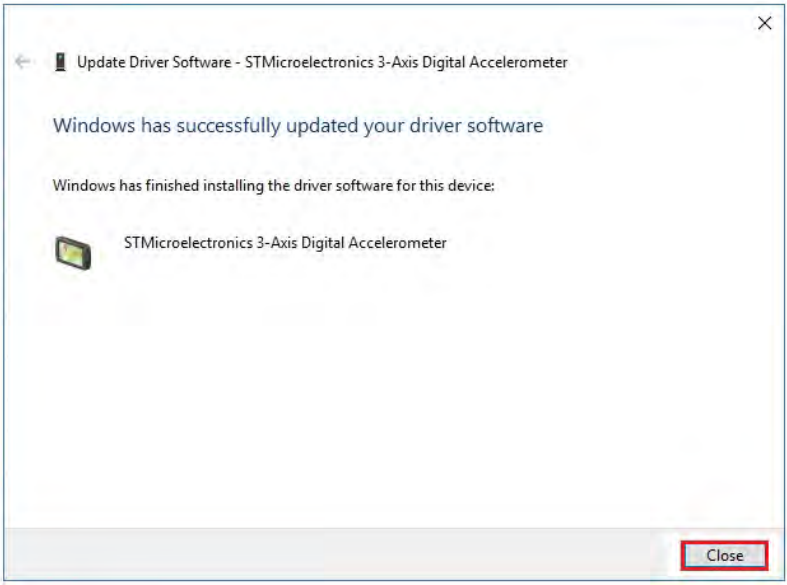

15 Go to **STMicroelectronics 3-Axis Digital Accelerometer Properties** window and select **Driver** tab, and you will see the STMicroelectronics G-sensor driver utility has been updated. Click **Close** to exit.

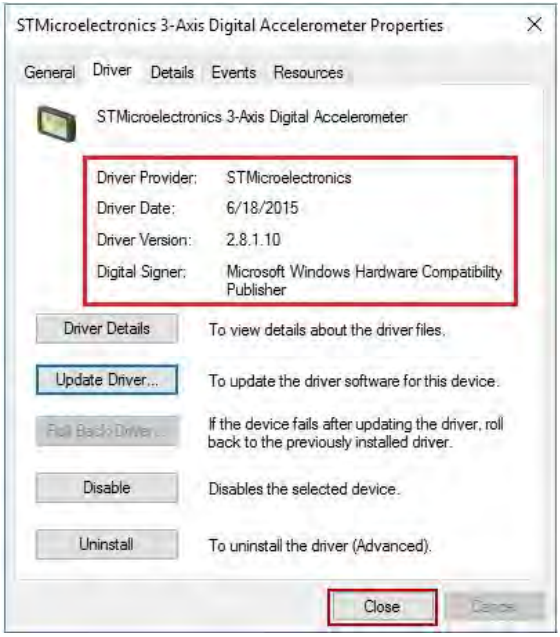

16 Once the installation is completed, restart MH-5100 for the changes to take effect.

4.5 Installing Bluetooth Software Installation Utility

Please follow the steps below to install Bluetooth driver utilities:

1 Enter the **C:\MH-5100_v1.0 > DRIVER > Platform > 4_Bluetooth > Win10-32Bit > BTW12.0.1.720_Win10_UART_USI** folder.

2 Click **Setup.exe** file for driver installation.

3 Follow the on-screen instructions to install the Bluetooth driver.

4 Once the installation is completed, restart MH-5100 for the changes to take effect.

4.6 Cash Drawer API Function

Init_Drawer	
int Init_Drawer(void);	
Purpose	Initialize the Cash Drawer.
Return	True (1) on success, False (0) on failure

Example	if (Init_Drawer() > 0) {
	//"Success!"
	} else {
	//"Failure!"
	}

Release_Drawer	
int Release_Drawer(void);	
Purpose	Release the Cash Drawer.
Return	True (1) on success, False (0) on failure

Example	if (Release_Drawer() > 0) {
	//"Success!"
	} else {
	//"Failure!"
	}

Drawer_Open	
int Drawer_Open(unsigned char channel, unsigned char time);	
Purpose	Open the Cash Drawer.
Value	channel = 0 (Open the Cash Drawer1 **<hardware is disabled>**) channel = 1 (Open the Cash Drawer2) time：Parameter range is 5~50, unit is 10 millisecond. (Time range： 50~500 millisecond)
Return	True (1) on success, False (0) on failure

Example	if (Drawer_Open(1, 10) == 0) {
	//"Failure!"
	} else {
	//"Success!"
	}

Drawer_Status	
int Drawer_Status(void);	
Purpose	Get the cash drawer status.
Return	0x31 -> Drawer is open ; 0x30 -> Drawer is close ; 0x00 -> Failure

Example	Drawer_ST = Drawer_Status();
	if (Drawer_ST == 0x31) {
	//"Open!"
	} else if (Drawer_ST == 0x30) {
	//"Close!"
	} else {
	//"Failure!"
	}

5 BIOS SETUP

This chapter guides users how to configure the basic system configurations via the BIOS Setup Utilities. The information of the system configuration is saved in BIOS NVRAM so that the Setup information is retained when the system is powered off. The BIOS Setup Utilities consist of the following menu items:

- Main Menu
- Advanced Menu
- Security Menu
- Boot Menu
- Exit Menu

5.1 Introduction

The board MH-5100 <Intel® Atom™ > uses an Insyde BIOS that is stored in the Serial Peripheral Interface Flash Memory (SPI Flash) and can be updated. The SPI Flash contains the BIOS Setup program, Power-on Self-Test (POST), the PCI auto-configuration utility, LAN EEPROM information, and Plug and Play support.

Insyde BIOS firmware is based on the UEFI (Unified Extensible Firmware Interface) Specifications and the Intel Platform Innovation Framework for EFI. The UEFI specification defines an interface between an operating system and platform firmware. The interface consists of data tables that contain platform-related information, boot service calls, and runtime service calls that are available to the operating system and its loader. These provide standard environment for booting an operating system and running pre-boot applications.

The diagram below shows the Extensible Firmware Interface's location in the software stack.

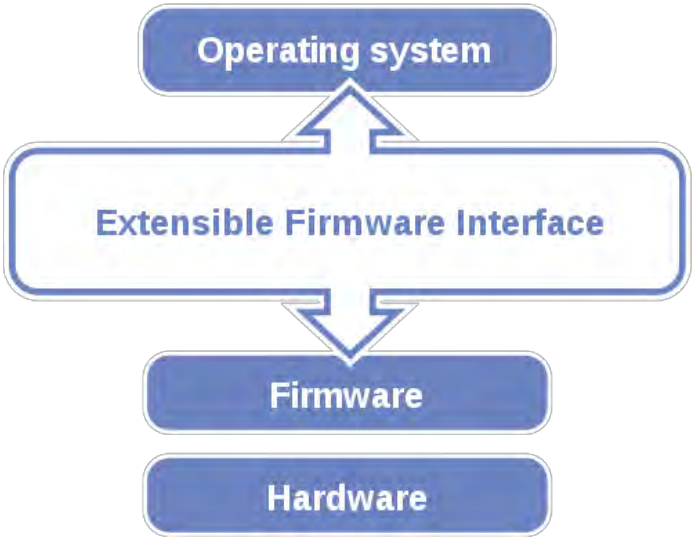

Figure 5-1. Extensible Firmware Interface Diagram

EFI BIOS provides an user interface that allows you to modify hardware configuration, e.g. change the system date and time, enable/disable a system component, determine bootable device priority, set up personal password, etc., which is convenient for engineers to perform modifications and customize the computer system and allows technicians to troubleshoot the occurred errors when the hardware is faulty.

The BIOS setup menu allows users to view and modify the BIOS settings for the computer. After the system is powered on, users can access the BIOS setup menu by pressing <Del> or <Esc> immediately while the POST message is running before the operating system is loading.

All the menu settings are described in details in this chapter.

5.2 Accessing Setup Utility

After the system is powered on, BIOS will enter the Power-On Self-Test (POST) routines and the POST message will be displayed:

Figure 5-2. POST Screen

Figure 5-3. Front Page Screen

Press **<Esc>** (the one that shares the decimal point at the bottom of the number keypad) to select SCU icon to access the Setup program. In a moment, the main menu of the Insyde Setup Utility will appear on the screen:

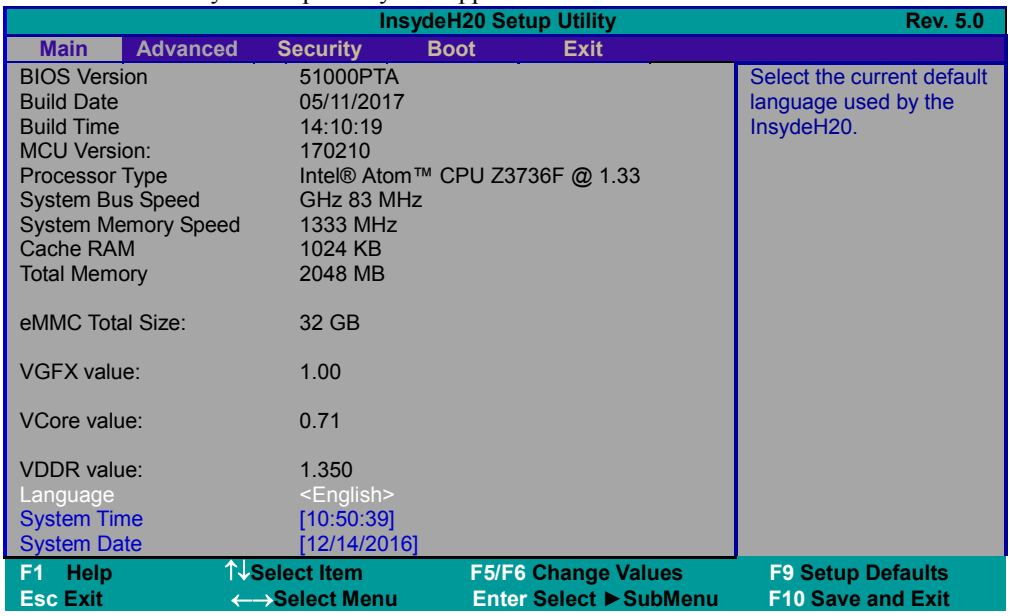

BIOS Setup Menu Initialization Screen

You may move the cursor by <↑> and <↓> keys to highlight the individual menu items. As you highlight each item, a brief description of the highlighted selection will appear at the bottom of the screen.

The language of the BIOS setup menu interface and help messages are shown in US English. You may use <↑> or <↓> key to select among the items and press <Enter> to confirm and enter the sub-menu. The following table provides the list of the navigation keys that you can use while operating the BIOS setup menu.

BIOS Setup Navigation Key	Description
<←> and <→>	Select a different menu screen (move the cursor from the selected menu to the left or right).
<↑> and <↓>	Select a different item (move the cursor from the selected item upwards or downwards)
<Enter>	Execute the command or select the sub-menu.
<F1>	Help
<F5/F6>	Change values.
<F9>	Load the default configuration values.
<F10>	Save the current values and exit the BIOS setup menu.
<Esc>	Close the sub-menu. Trigger the confirmation to exit BIOS setup menu.

5.3 Main

Menu Path *Main*

The **Main** menu allows you to view the BIOS Information, change the system date and time, and view the user access privilege level. Use tab to switch between date elements. Use <↑> or <↓> arrow keys to highlight the item and enter the value you want in each item. This screen also displays the BIOS version (project) and BIOS Build Date and Time.

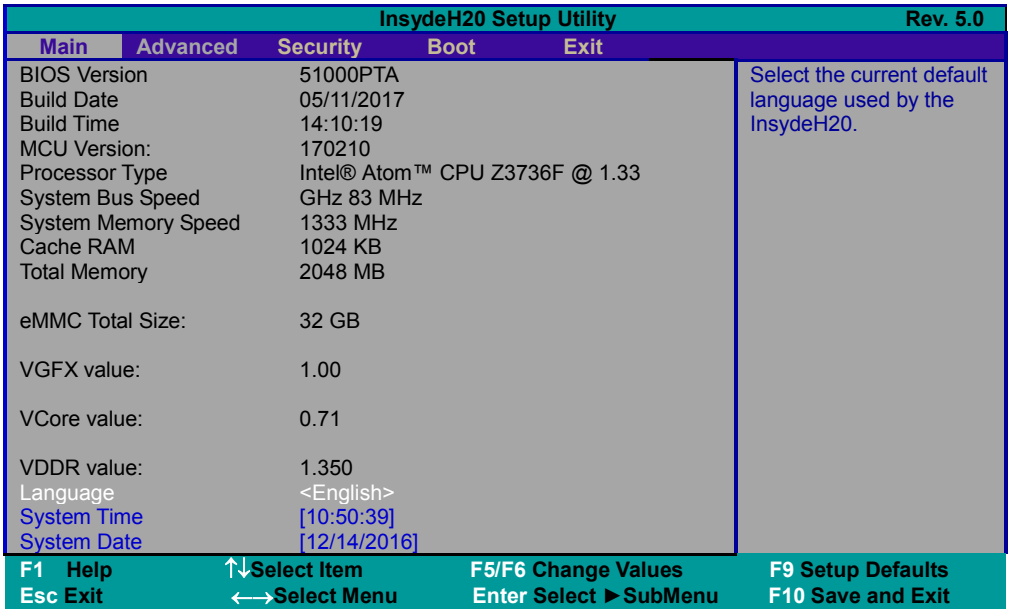

Main Screen

BIOS Setting	Options	Description/Purpose
BIOS Version	No changeable options	Displays the BIOS Version.
Build Date	No changeable options	Displays the current Build Date.
Build Time	No changeable options	Displays the current Build Time.
MCU Version	No changeable options	Displays the MCU Version.
Processor Type	No changeable options	SOC Type on the platform.
System Bus Speed	No changeable options	Displays Bus speed.
System Memory Speed	No changeable options	Displays Memory Speed.
Cache RAM	No changeable options	Displays Cache RAM size.
Total Memory	No changeable options	Displays Total memory size.
eMMC Total Size	No changeable options	Displays eMMC memory size.

BIOS Setting	Options	Description/Purpose
VGFX value	No changeable options	Displays the current VGFX voltage.
VCore value	No changeable options	Displays the current VCore voltage.
VDDR value	No changeable options	Displays the current VDDR voltage.
Language	English, Francais, Chinese, Japanese	End users can select from four languages.
System Time	hour, minute, second	Specifies the current time.
System Date	month, day, year	Specifies the current date.

5.4 Advanced

Menu Path	*Advanced*

This menu provides advanced configurations for setting USB Configuration.

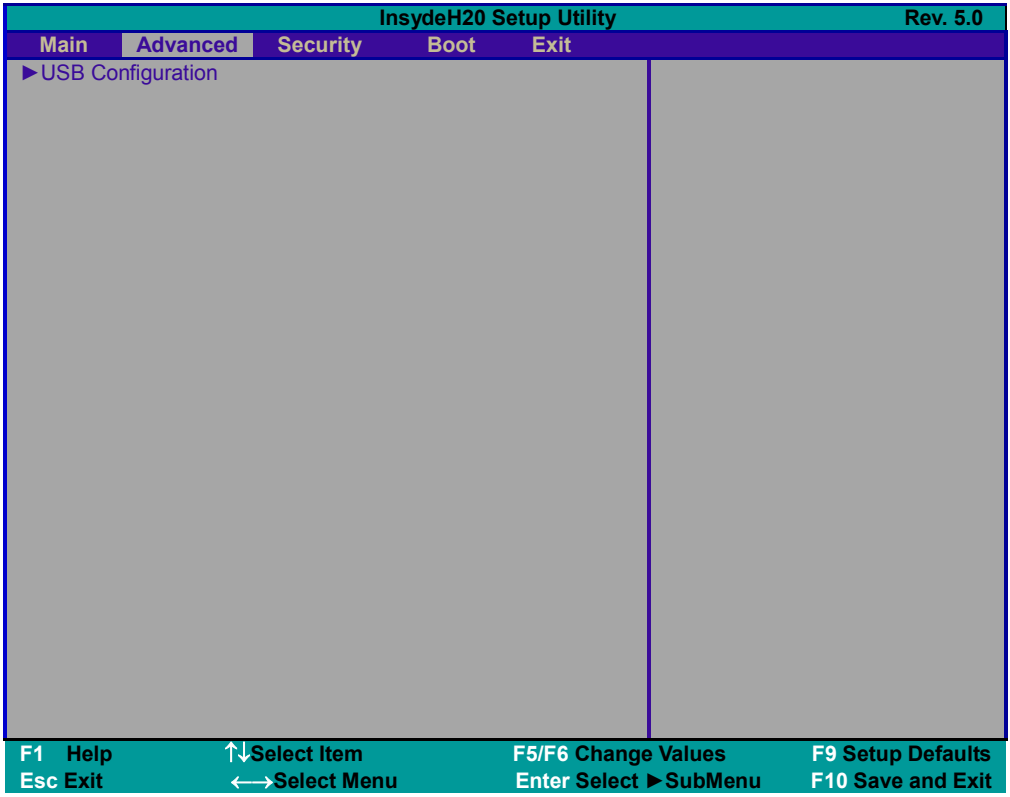

Advanced Menu Screen

BIOS Setting	Options	Description/Purpose
USB Configuration	Sub-Menu	USB Configuration Parameters.

5.4.1 Advanced – USB Configuration

Menu Path	*Advanced > USB Configuration*

The **USB Configuration** allows users to configure advanced USB settings such as enabling/disabling xHCI (Extensible Host Controller Interface) Controller and xHCI Mode.

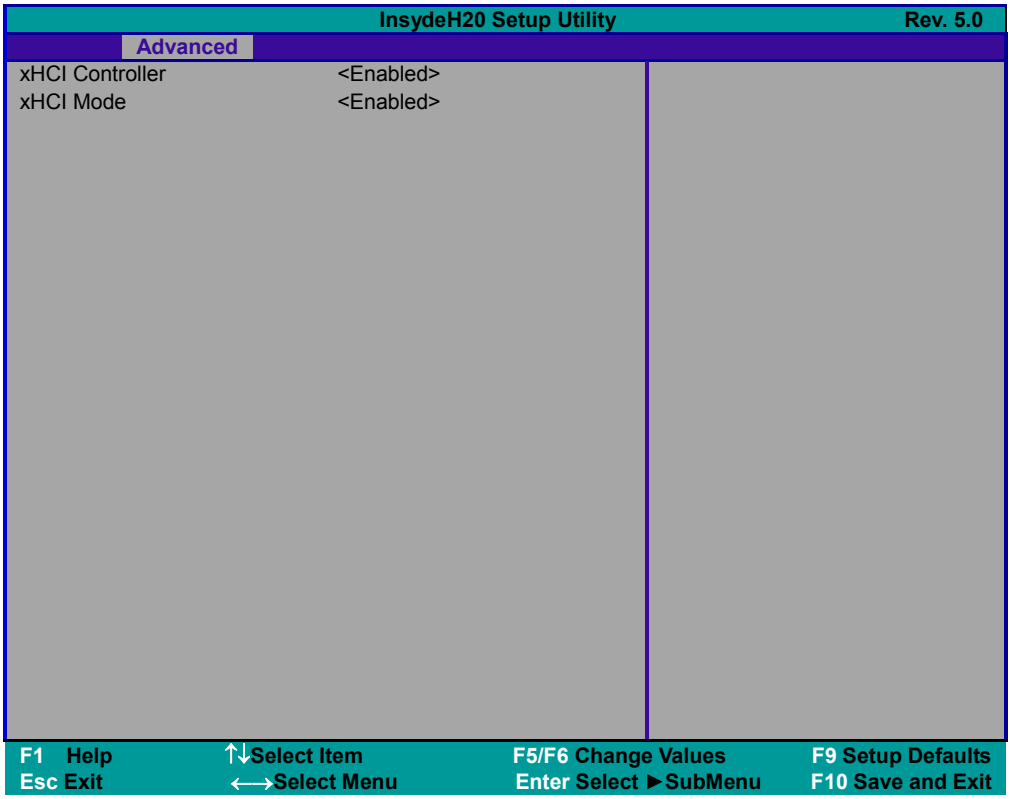

USB Configuration Screen

BIOS Setting	Options	Description/Purpose
xHCI Controller	- Enabled - Disabled	Enables or Disables System ability to xHCI.
xHCI Mode	- Enabled - Disabled	Enables or Disables xHCI mode.

5.5 Security

Menu Path	*Security*

From the **Security** menu, you are allowed to create, change or clear the supervisor password. You will be asked to enter the configured supervisor password before you can access the Setup Utility.

By setting a supervisor password, you will prevent other users from changing your BIOS settings. You can configure a supervisor password and then configure a user password. A supervisor has much more privileges over the settings in the Setup utility than a user. Heed that a user password does not provide access to most of the features in the Setup utility.

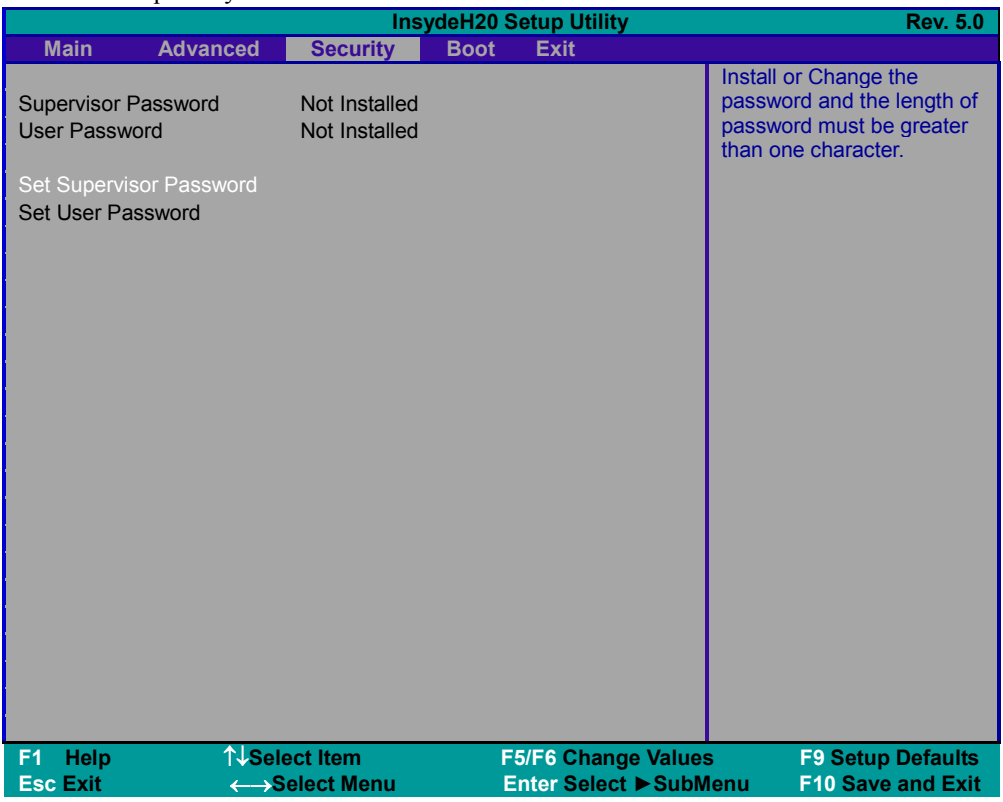

Security Screen

BIOS Setting	Options	Description/Purpose
Set Supervisor Password	Password can be 1-20 alphanumeric characters.	Specifies the administrator password.
Set User Password	Password can be 1-20 alphanumeric characters.	Specifies the user password.

5.6 Boot

Menu Path	*Boot*

This menu provides control items for system boot configuration such as setting setup prompt timeout, enabling/disabling quick boot, quiet boot, Network Stack and PXE Boot capability, adding boot options, configuring ACPI (Advanced Configuration and Power Management Interface) settings, USB boot and EFI device first.

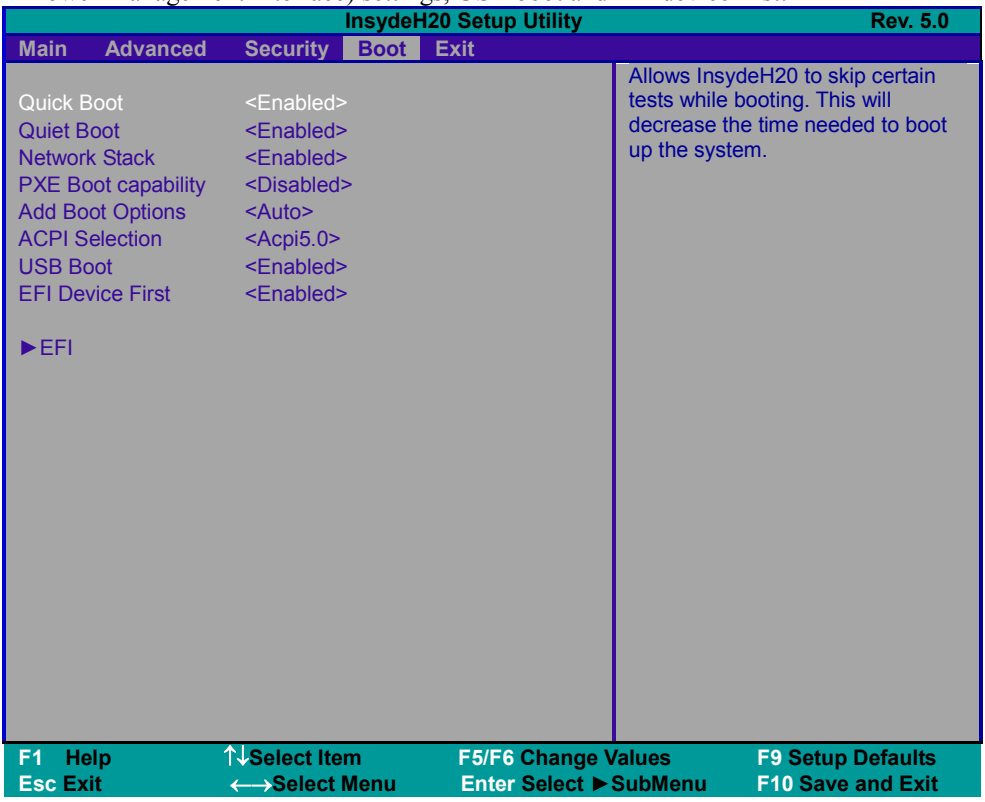

Boot Screen

BIOS Setting	Options	Description/Purpose
Quick Boot	- Enabled - Disabled	This will decrease the time needed to boot the system.
Quiet Boot	- Enabled - Disabled	Enables or Disables booting in Text Mode.
Network Stack	- Enabled - Disabled	Network Stack Support: • Windows 8 BitLocker Unlock

BIOS Setting	Options	Description/Purpose
		• UEFI IPv4/IPv6 PXE • Legacy PXE OPROM
PXE Boot capability	- Enabled - Disabled	• **Disabled:** Supports Network Stack • **UEFI PXE:** IPv4/IPv6 • **Legacy:** Legacy PXE OPROM only
Add Boot Options	- First - Last - Auto	Position in Boot order for shell, Network and Removables.
ACPI Selection	- Acpi 1.0B - Acpi 3.0 - Acpi 4.0 - Acpi 5.0	Selects booting to ACPI.
USB Boot	- Enabled - Disabled	Disables or Enables booting to USB boot devices.
EFI Device First	- Enabled - Disabled	Determines EFI Device first or legacy device first.
EFI	Sub-Menu	EFI Boot order settings.

5.6.1 Boot – EFI

Menu Path	*Boot > EFI*

The **EFI** allows users to view the boot devices.

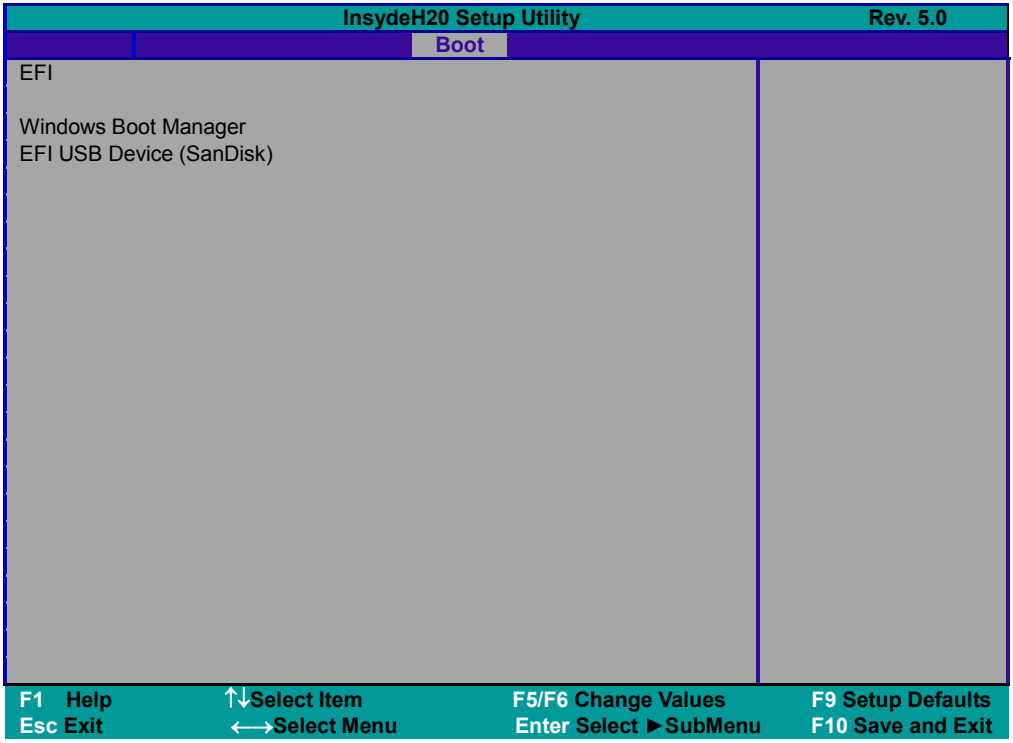

EFI Configuration Screen

BIOS Setting	Options	Description/Purpose
EFI	No changeable options	Displays the Boot devices.

5.7 Exit

Menu Path	*Exit*

The **Exit** allows users to save or discard changed BIOS settings as well as load the optimized defaults for BIOS settings.

Save Changed BIOS Settings
To save and validate the changed BIOS settings, select **Exit Saving Changes** (or press **F10**) to validate the changes and then exit the system.

Discard Changed BIOS Settings
To cancel the BIOS settings you have previously configured, select **Exit Discarding Changes** from this menu, or simply press **Esc** to exit the BIOS setup.

Load Optimal Defaults
You may simply press **F9** at any time to load the **Optimized Values** which resets all BIOS settings to the factory defaults.

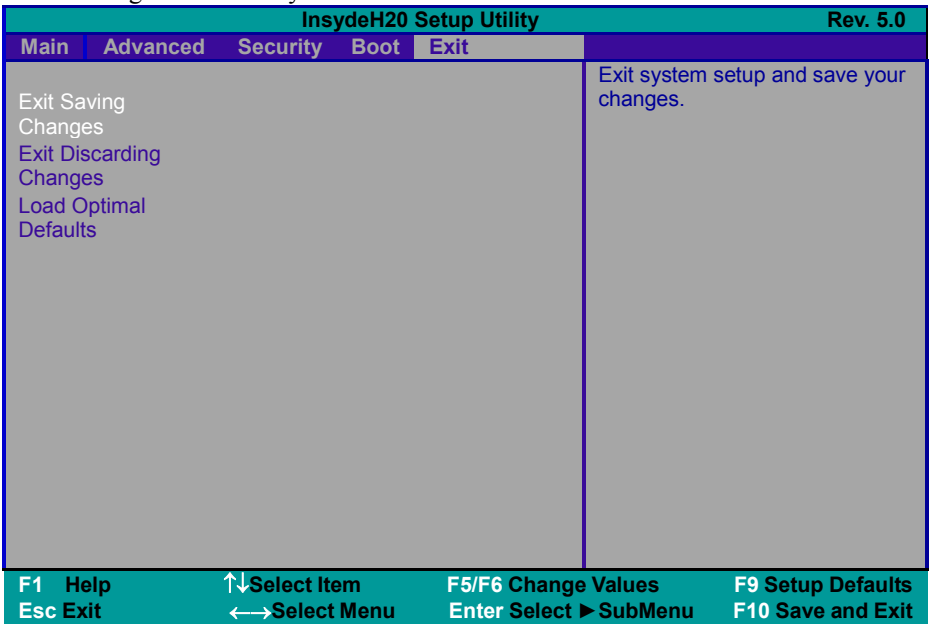

Exit Screen

BIOS Setting	Options	Description/Purpose
Exit Saving Changes	No changeable options	Exits and saves the changes in NVRAM.

BIOS Setting	Options	Description/Purpose
Exit Discarding Changes	No changeable options	Exits and discard Changes done so far to any of the setup options.
Load Optimal Defaults	No changeable options	Loads the optimized defaults for BIOS settings.

Appendix A System Diagrams

This appendix contains exploded diagrams and part numbers of the Pad, Lite Cradle and Tiltable Cradle for MH-5100 system.

The following topics are included:

Exploded Diagrams for Integrated Pad

- Exploded Diagram for Top Cover, Touch Panel and Panel Assembly
- Exploded Diagram for Pad PCBA Assembly
- Exploded Diagram for Bottom Cover Assembly
- Exploded Diagram for Camera Module & Barcode Scanner Module Assembly
- Exploded Diagram for Back Cover Assembly
- Exploded Diagram for Smart Card Reader Assembly
- Exploded Diagrams For External Barcode Scanner Assembly (1~3)
- Exploded Diagram for Scan Button Assembly

Exploded Diagrams for Lite Cradle

- Exploded Diagram for Cradle Top Cover Assembly
- Exploded Diagram for Cradle PCBA & Bottom Cover Assembly

Exploded Diagrams for Tiltable Cradle

- Exploded Diagram for Base Bottom Cover Assembly
- Exploded Diagram for Rotation Cover Assembly
- Exploded Diagram for Base Top Cover Assembly
- Exploded Diagram for Pad Lock Assembly
- Exploded Diagram for Holder Back Cover Assembly
- Exploded Diagram for Holder Top Cover Assembly
- Exploded Diagram for Card Holder Assembly

Integrated Pad Exploded Diagrams

Exploded Diagram For Top Cover & Touch Panel & Panel Assembly

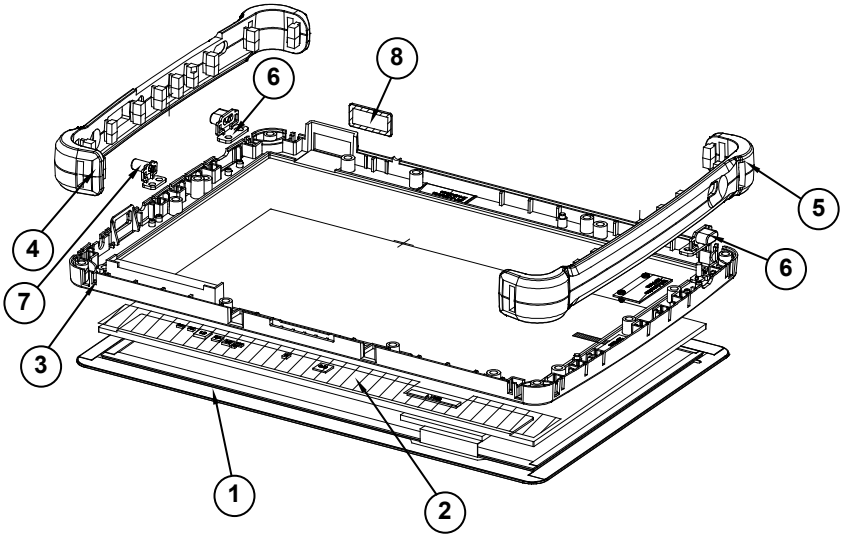

ITEM	Description	Part No.	Q'ty
1	Touch Panel	52-380-14164023	1
2	Panel	52-351-12101028	1
3	MH-5100 Top Cover	30-002-12210378	1
4	MH-5100 Bumper Right	30-013-48300378	1
5	MH-5100 Bumper Left	30-013-48200378	1
6	MH-5100 Barcode Button	30-046-28110378	2
7	MH-5100 Power Button	30-046-28210378	1
8	MH-5100 Barcode Lens	30-021-10130378	1

Exploded Diagram For Pad PCBA Assembly

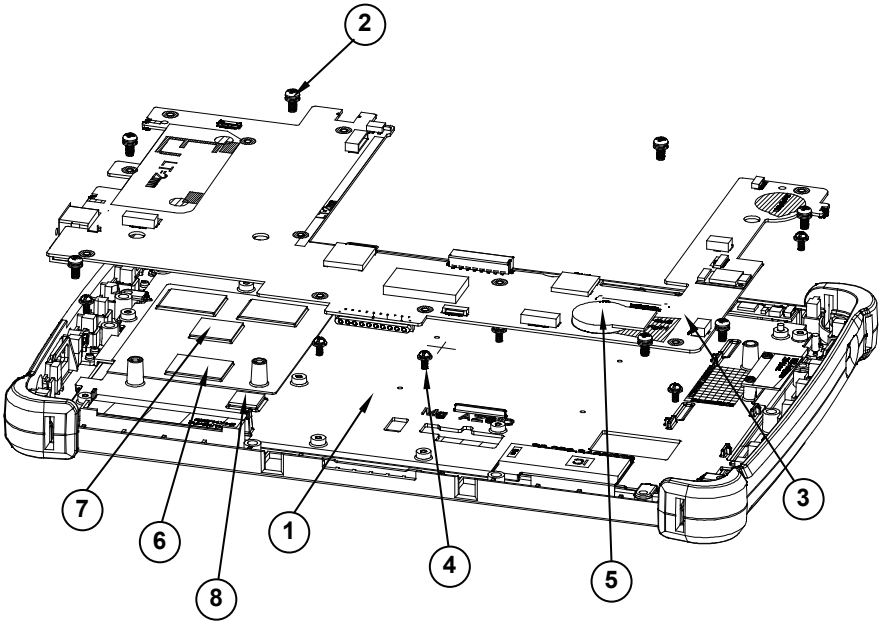

ITEM	Description	Part No.	Q'ty
1	MH-5100 Panel Holder	20-029-34001378	1
2	Round Head With Spring Washer Screw (M2.5x0.45Px6mm)	22-235-25006011	7
3	MH-5100 PCBA	N/A	1
4	Round Head With Spring Washer Screw (M2x0.4Px5mm)	22-232-20005311	11
5	Sub-Battery	27-061-37801071	1
6	Thermal Pad 20x15mm	81-006-82015001	3
7	Thermal Pad 15x15mm	81-006-81515005	1
8	Thermal Pad 10x10mm	81-006-81010003	1

Exploded Diagram For Bottom Cover Assembly

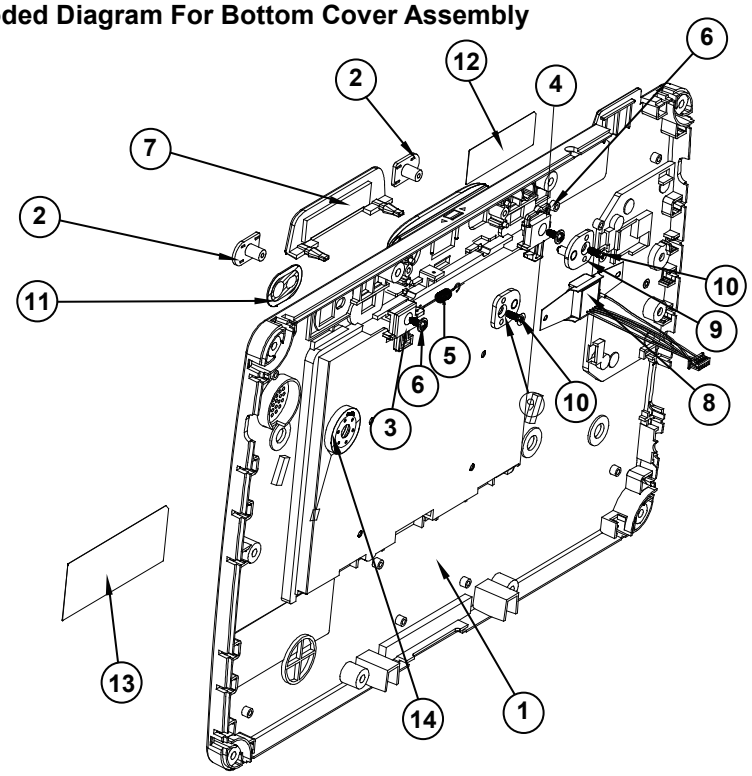

ITEM	Description	Part No.	Q'ty
1	MH-5100 Bottom Cover	30-002-12110378	1
2	MH-5100 Slide Key	30-002-28410378	2
3	MH-5100 Battery Hook	90-019-04110378	1
4	MH-5100 Battery Hook (Lock)	90-019-04210378	1
5	MH-5100 Battery Lock Spring	23-002-00000332	1
6	Round Washer Head Screw #1/T2.0x5mm	22-132-20005011	2
7	MH-5100 MSR-Bumper-Rubber	30-013-48100378	1
8	MSR Module	52-551-02043910	1
9	PA-8225 MSR Plate Pin (IDTECH)	20-005-07001342	2
10	Flat Head Screw #1 (T2.6x6mm)	22-112-26006011	2
11	Camera Lens	30-021-10330378	1
12	Warning Label	94-017-01601378	1
13	Rating Label	94-017-01602378	1
14	Speaker	27-021-37802071	1

Exploded Diagram For Camera Module & Barcode Scanner Module Assembly

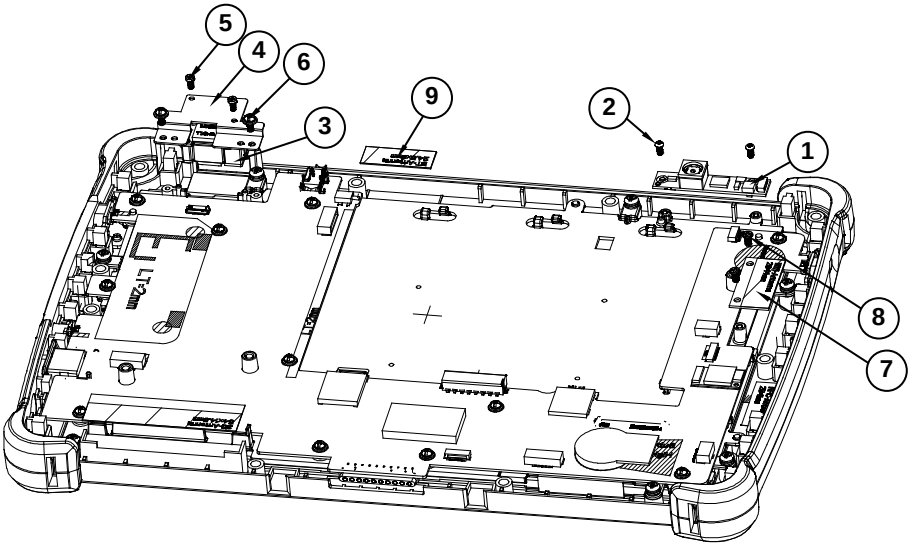

ITEM	Description	Part No.	Q'ty
1	Camera PCBA	52-151-08040533	1
2	Round Head Screw φ3.3/#1/M2x0.4Px4mm	22-232-20004811	2
3	Barcode Module	52-820-36800111	1
4	MH-5100 Barcode Fix Plate	80-005-03001378	1
5	Fillister Head Screw T1.7xL4mm	22-175-17004011	2
6	Round Head With Spring Washer Screw (M2x0.4px5mm)	22-232-20005311	2
7	WIFI Antenna	27-029-37805071	1
8	Fillister Head Screw M2x0.4Px2.5mm	22-272-20004011	2
9	Bluetooth Antenna	27-029-37802071	1

Exploded Diagram For Back Cover Assembly

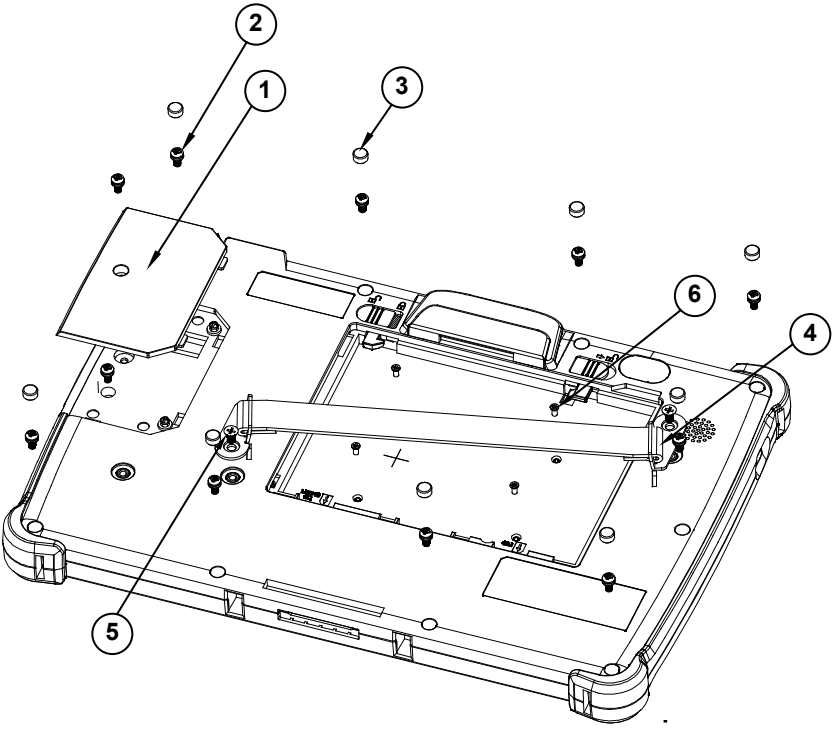

ITEM	Description	Part No.	Q'ty
1	MH-5100 Decoration Cover	30-002-28110378	1
2	Round Head With Spring Washer Screw (M2.5x0.45Px6mm)	22-235-25006011	11
3	MH-5100 –Screw-Hole-Plug	30-013-06100378	9
4	MH-5100 Strap Bracket	80-006-06001378	2
5	Pan Head Screw M3x0.5Px6mm	22-220-30006011	2
6	M2xL3mm Flat-Head-Screw	22-215-20003011	4

Exploded Diagram For Smart Card Reader Assembly

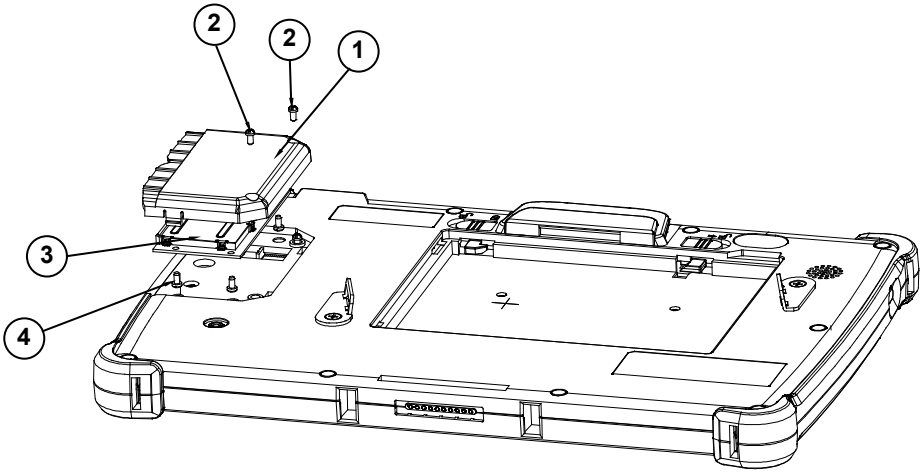

ITEM	Description	Part No.	Q'ty
1	MH-5100 Smart Card Cover	30-002-28610378	1
2	Round Head Screw φ3.3 / #1 / M2x0.4Px4mm	22-232-20004811	2
3	Smart Card Module	52-551-16000010	1
4	Pan Head Screw (T2.0x4mm)	22-125-20004011	4

Exploded Diagram For External Barcode Scanner Assembly (1)

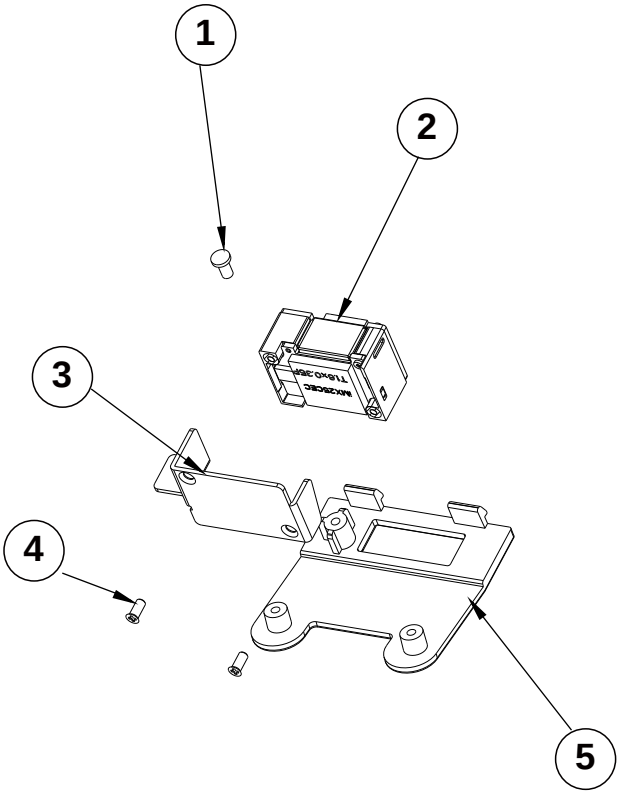

No.	Component Name	P/N No.	Q'ty
1	FILLISTER HEAD SCREW#0/T2x4mm	22-175-20004011	1
2	BARCODE SCANNER MODULE	52-820-36800111	1
3	BARCODE BARACKET	80-006-03002378	1
4	FLAT HEAD SCREW T1.7x4mm	22-115-17004011	2
5	BARCODE BOTTOM COVER	30-002-28114378	1

Exploded Diagram For External Barcode Scanner Assembly (2)

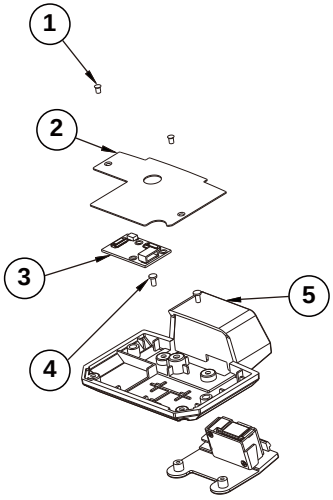

No.	Component Name	P/N No.	Q'ty
1	FLAT HEAD SCREW M2x0.4Px3mm	22-212-20003011	2
2	BARCODE TOP BRACKET	80-006-03003378	1
3	MR-5100RX-3-PCB	MR-5100RA-31N	1
4	FILLISTER HEAD SCREW/T2.9x4mm	22-175-20004011	2
5	BARCODE TOP COVER	30-002-28115378	1

Exploded Diagram For External Barcode Scanner Assembly (3)

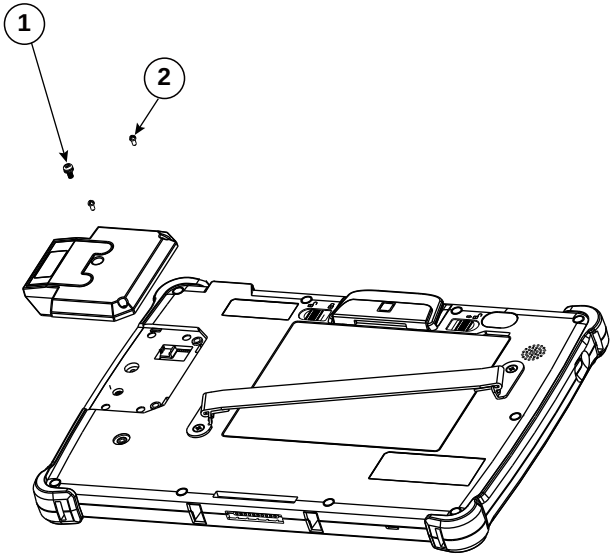

No.	Component Name	P/N No.	Q'ty
1	Round Head With Spring Washer Screw (M2.5x0.45Px6mm)	22-235-25006011	1
2	ROUND HEAD SCREW φ3.3/#1/M2x0.4Px4mm	22-232-20004811	2

Exploded Diagram For Scan Button Assembly

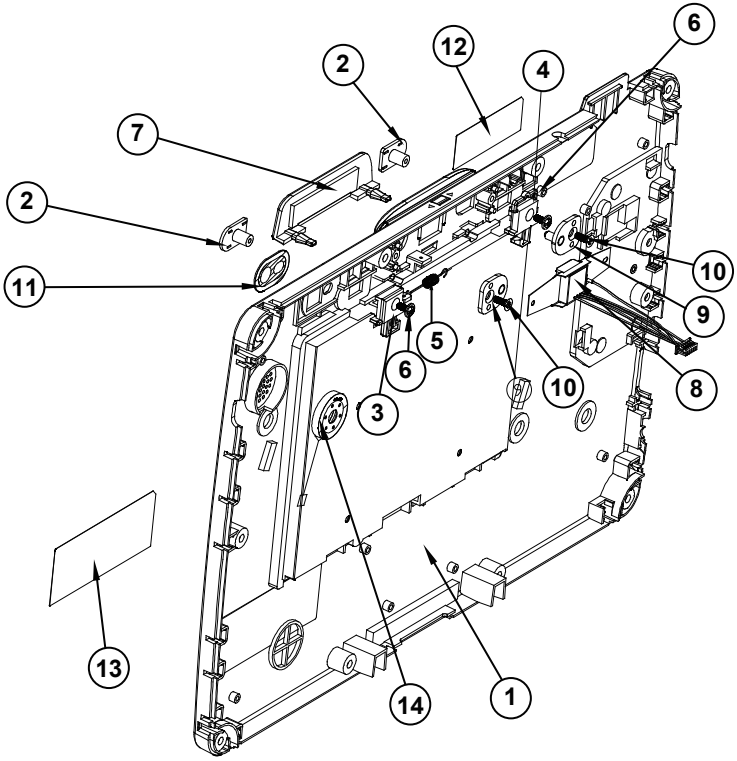

ITEM	Description	Part No.	Q'ty
1	MH-5100 Bottom Cover (VR(PANTONE White 5315U)	30-002-12410378	1
2	MH-5100 Slide Key-(PANTONE 5315U)	30-002-28810378	2
3	MH-5100 Battery Hook	90-019-04110378	1
4	MH-5100 Battery Hook (Lock)	90-019-04210378	1
5	MH-5100 Battery Lock Spring	23-002-00000332	1
6	Round Washer Head Screw #1/T2.0x5mm	22-132-20005011	2
7	MH-5100 Barcode-Button-Rubber	90-013-01300378	1
8	MH-5100 MSR-Hole-Plug	90-013-01200378	1
9	Barcode PCBA	MR-5100RA-81N	1
10	Flat Head Screw #1 (T2.5x5mm)	22-172-25005011	2
11	Lens_opaque	30-021-10430378	1
12	Warning Label	94-017-01601378	1
13	Rating Label	94-017-01602378	1
14	Speaker	27-021-37802071	1

Lite Cradle Exploded Diagrams

Exploded Diagram For Cradle Top Cover Assembly

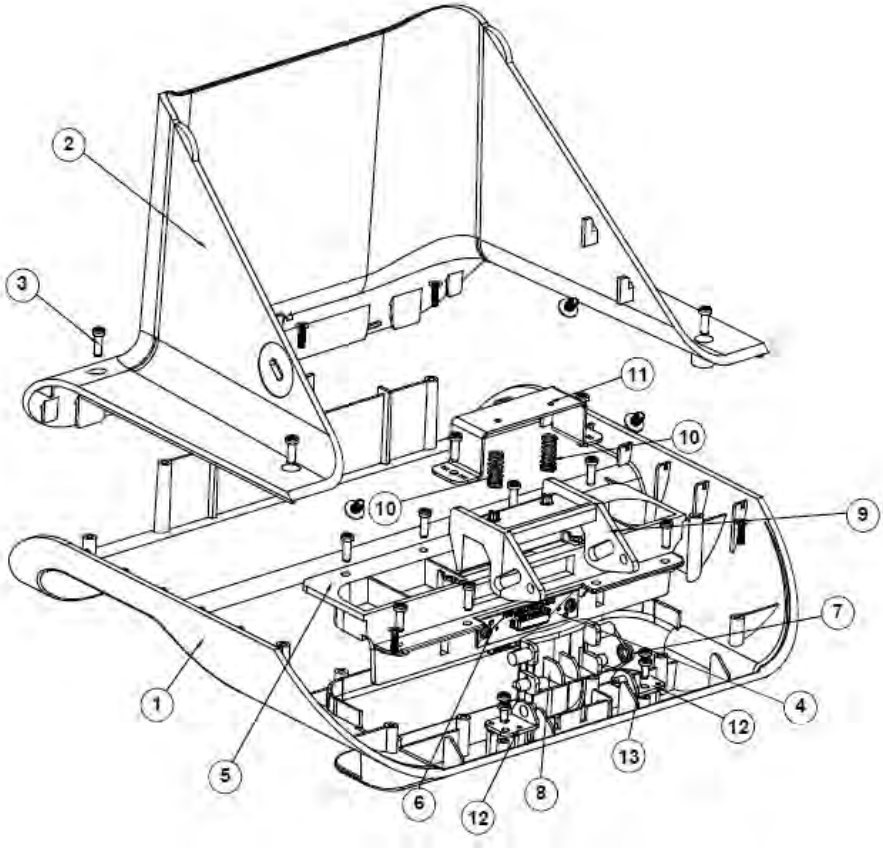

ITEM	Description	Part No.	Q'ty
1	MH-5100-Lite-Cradle-Top-Cover	30-002-28310378	1
2	MH-5100-Lite-Cradle-Rear-Cover	30-002-28210378	1
3	T2.6xL8mm Pan-Head-Screw	22-135-26008011	14
4	POGO Pin PCBA	10-625-01010025	1
5	MH-5100-Lite-Cradle-Hole-Cover	30-002-28510378	1
6	Pan Head screw (T2.0x4mm)	22-125-20004011	2
7	MH-5100-Lite-Cradle-Ejection-Spring	23-000-00010622	1
8	MH-5100-Lite-Cradle-Lock-Button	30-046-09230378	1
9	MH-5100-Lite-Cradle-Button-Hook	30-046-09130378	1
10	MT-590X Battery Lock Spring	23-000-01000132	2
11	MH-5100-Lite-Cradle-Lock-Spring-Cover	80-004-03001378	1
12	MH-5100-Lite-Cradle-Rotate-Plate	80-005-03002378	2
13	T2.3xL5mm Pan-Head-Screw	22-135-23005011	4

Exploded Diagram For Cradle PCBA & Bottom Cover Assembly

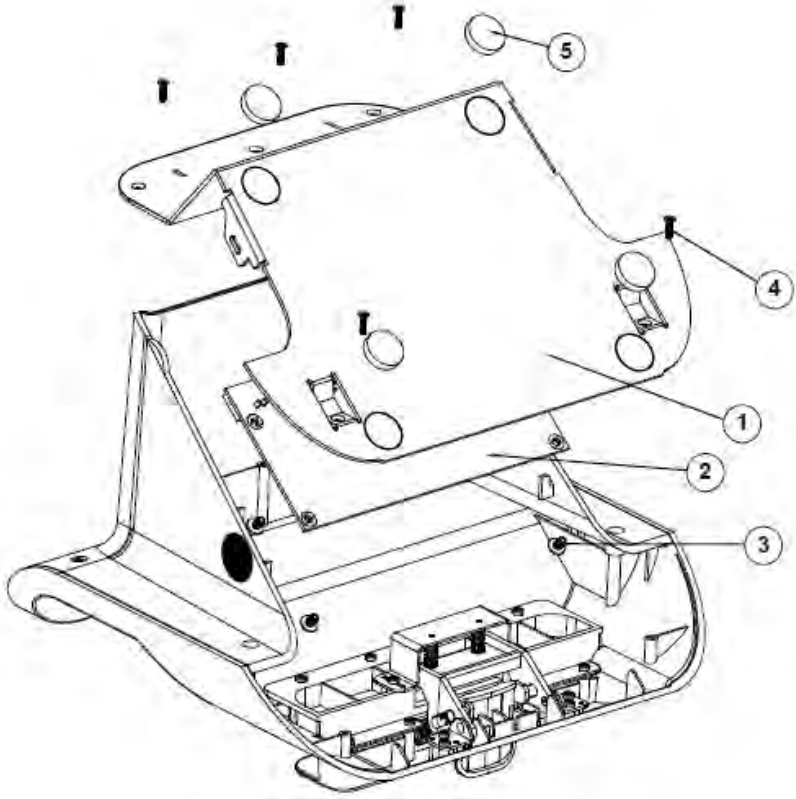

ITEM	Description	Part No.	Q'ty
1	MH-5100-Lite-Cradle-Metal-Plate	80-005-03003378	1
2	Lite Cradle PCBA	N/A	1
3	Round Washer Head Screw (M3x0.5Px6mm)	22-232-30006311	4
4	T2.6xL8mm Flat-Head-Screw	22-115-26008011	5
5	Rubber Foot φ=16x3.5mm (Black)	30-004-06800000	4

Tiltable Cradle Exploded Diagrams

Exploded Diagram For Base Bottom Cover Assembly

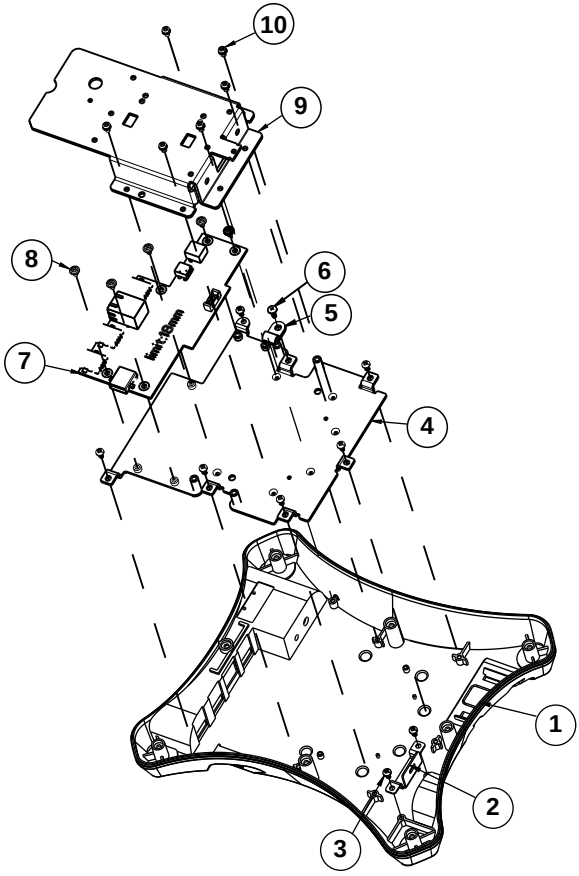

No.	Component Name	P/N No.	Q'ty
1	BASE BOT	30-027-28160378	1
2	KING LOCK PLATE	80-005-03006378	1
3	TAPPING 3xL5	22-121-30005011	8
4	BOTTOM PLATE	80-005-03004378	1
5	CABLE CLAMP	90-023-04100378	1
6	TAPPING 3xL8	22-122-30008005	1
7	PCBA	MR-5100RA-11N	1
8	SCREW M3xL5	22-242-30005311	5
9	CRADLE BASE BRACKET	80-006-03001378	1
10	SCREW M3xL6	22-232-30060211	6

Exploded Diagram For Rotation Cover Assembly

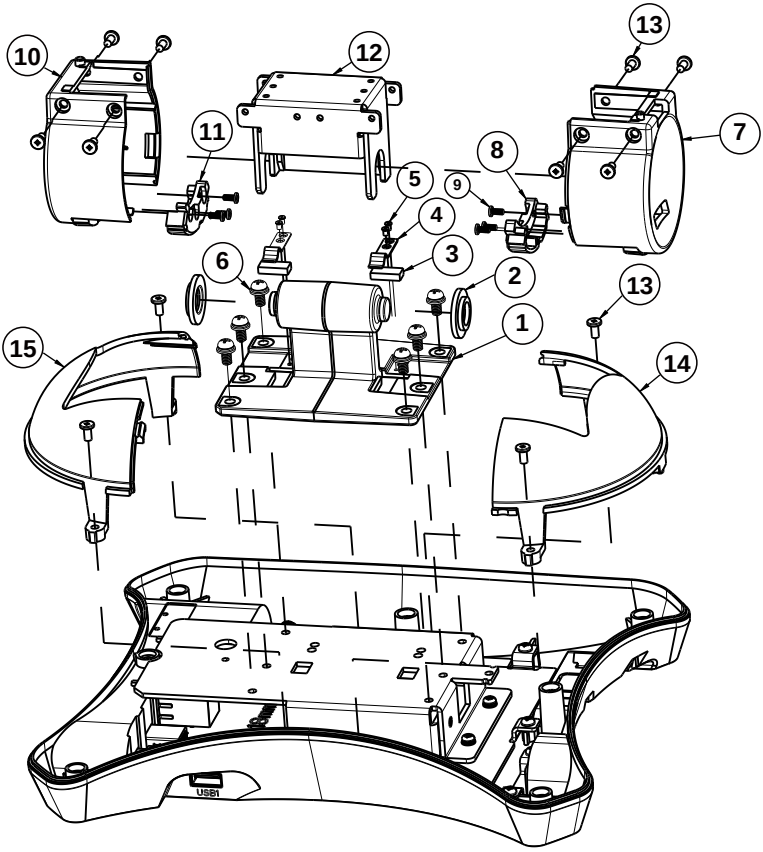

No.	Component Name	P/N No.	Q'ty
1	CRADLE-STAND	80-017-01001378	1
2	BEARING	30-002-09130378	2
3	CUSHION	30-013-06110378	2
4	SPRING PLATE	80-005-06001378	2
5	SCREW M2xL3	22-212-20003911	4
6	SCREW M4xL8	22-232-40008211	6
7	ROTATION COVER R	30-002-28111378	1
8	ROTATION-COVER-R-ANY	30-002-14230378	1
9	TAPPING T2.5xL5	22-172-25005011	6
10	ROTATION-COVER-L	30-002-12130378	1
11	ROTATION-COVER-L-ANY	30-002-14130378	1
12	CRADLE-STAND-PLATE	80-005-03005378	1
13	SCREW M3xL6	22-272-30006311	12
14	BASE SPHERE RIGHT	30-027-28210378	1
15	BASE SPHERE LEFT	30-027-28110378	1

Exploded Diagram For Base Top Cover Assembly

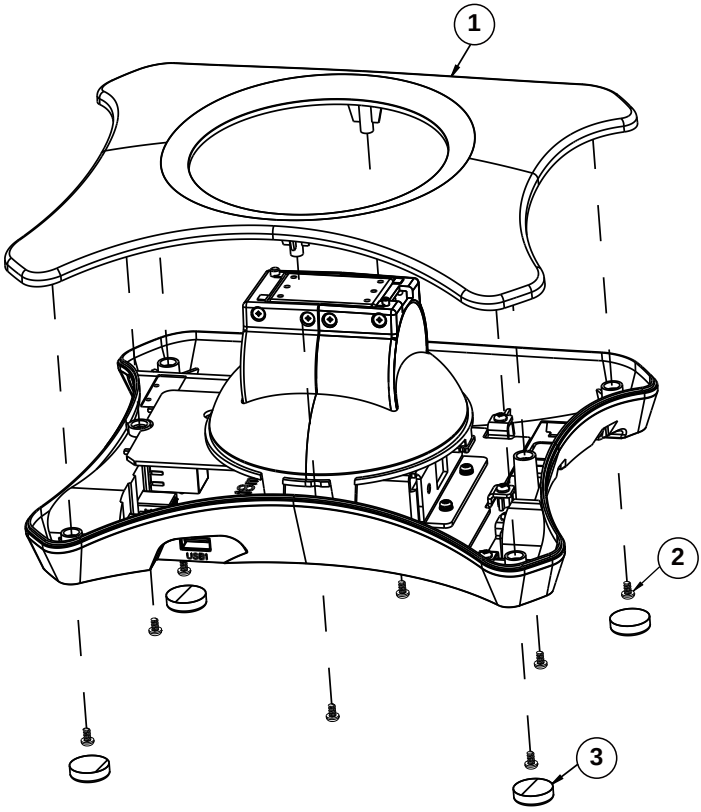

No.	Component Name	P/N No.	Q'ty
1	BASE TOP	30-027-28310378	1
2	TAPPING T3xL5	22-121-30005011	8
3	RUBBER FOOT (Φ 17.5x5.3mm)	30-004-06100378	4

Exploded Diagram For Pad Lock Assembly

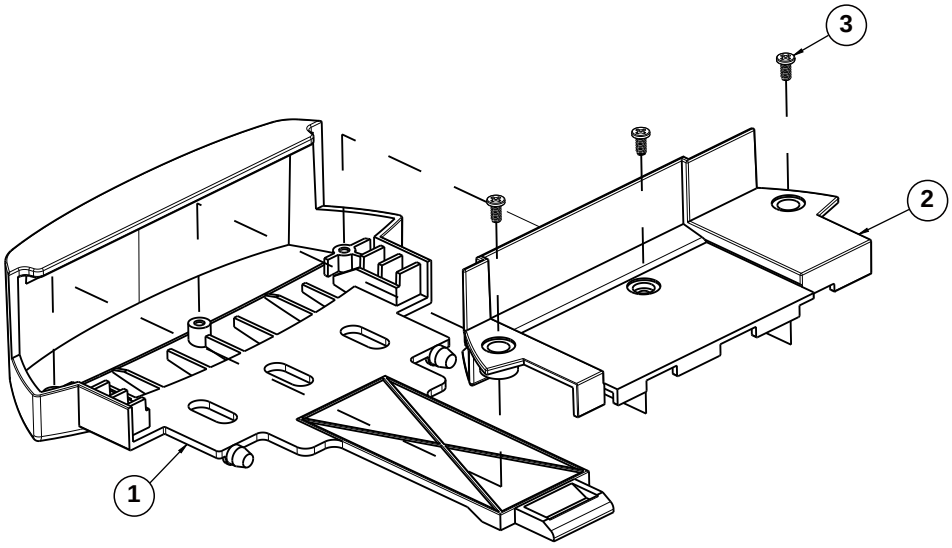

No.	Component Name	P/N No.	Q'ty
1	HOLDER_LOCK_TOP	30-012-28410378	1
2	HOLDER-LOCK-BOTTOM	30-012-28310378	1
3	TAPPING T2.5xL5	22-172-25005011	3

Exploded Diagram For Holder Back Cover Assembly

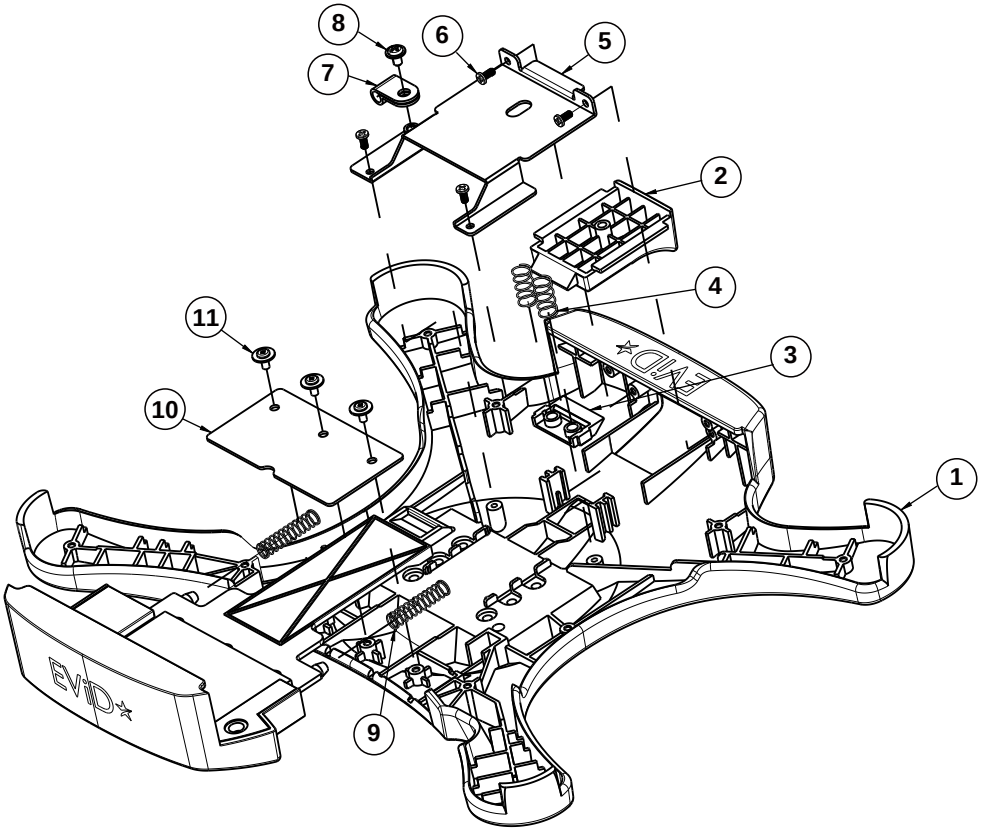

No.	Component Name	P/N No.	Q'ty
1	HOLDER_BACK_COVER	30-012-28110378	1
2	SWITCH	30-002-28113378	1
3	SWITCH-REPOSITION	30-002-28112378	1
4	BUTTON-SPRING	23-002-00000142	2
5	PUSH-BUTTON-PLATE	80-005-03007378	1
6	TAPPING T2.5xL5	22-172-25005011	4
7	CABLE CLAMP	90-023-04100378	1
8	SCREW M3xL5	22-242-30005311	1
9	HOLDER-LOCK-SPRING	23-002-00000252	2
10	HOLDER_LOCK_CASE	80-032-03001378	1
11	TAPPING T2.6xL5	22-132-26005011	3

Exploded Diagram For Holder Top Cover Assembly

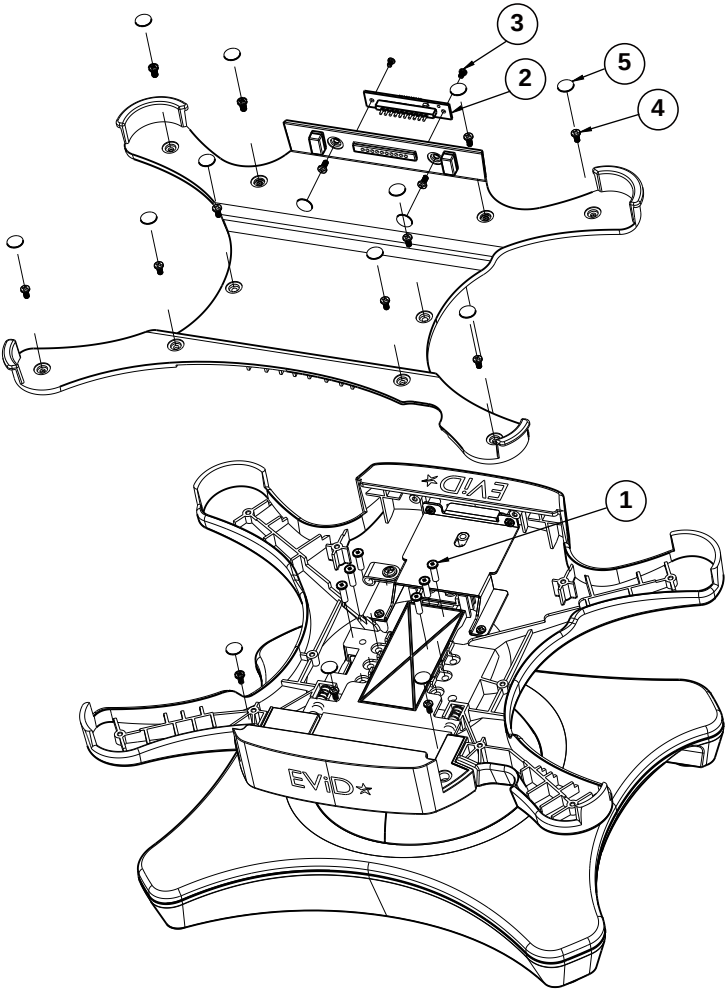

No.	Component Name	P/N No.	Q'ty
1	SCREW M3xL10	22-272-30010018	6
2	CRADLE CHARGE PCB	N/A	1
3	TAPPING T2xL3	22-172-20003011	2
4	TAPPING T2.5xL5	22-172-25005011	15
5	MYLAR-D8T0.3	30-056-02100378	15

Exploded Diagram For Card Holder Assembly

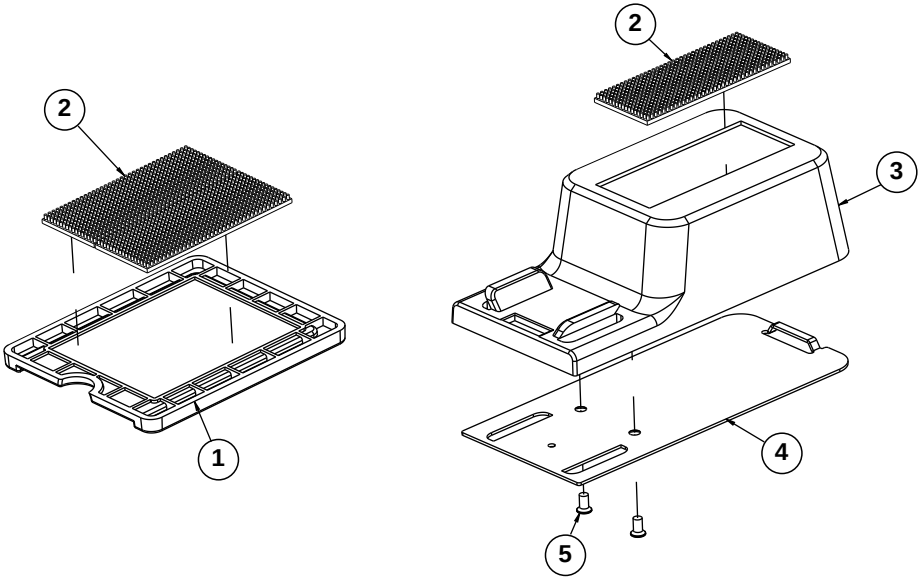

No.	Component Name	P/N No.	Q'ty
1	CARD-LICENSE	30-002-28910378	1
2	VELCRO	30-082-31100378	3
3	CARD HOLDER	30-012-28510378	1
4	CARD HOLDER PLATE	80-005-03008378	1
5	FLAT HEAD SCREW#2/T3.0x6mm	22-112-30006011	2

Appendix B Technical Summary

This appendix will give you a brief introduction of the allocation maps for MH-5100 resources.

The following topics are included:

- Interrupt Map
- I/O Map
- Memory Map
- System BIOS Update Procedure

Interrupt Map

IRQ	Assignment
IRQ 0	System timer
IRQ 4	Communications Port (COM1)
IRQ 8	High precision event timer
IRQ 9	GPIOVirtual Controller
IRQ 24	Intel(R) SST Audio Device (WDM)
IRQ 25	Intel(R) SST Audio Device (WDM)
IRQ 26	Intel(R) SST Audio Device (WDM)
IRQ 27	Intel(R) SST Audio Device (WDM)
IRQ 28	Intel(R) SST Audio Device (WDM)
IRQ 29	Intel(R) SST Audio Device (WDM)
IRQ 32	I2C Controller
IRQ 33	I2C Controller
IRQ 34	I2C Controller
IRQ 35	I2C Controller
IRQ 36	I2C Controller
IRQ 39	UART Controller
IRQ 40	UART Controller
IRQ 44	Intel(R) SD Host Controller
IRQ 46	Intel(R) SD Host Controller
IRQ 47	Intel(R) SD Host Controller
IRQ 48	GPIO Controller
IRQ 49	GPIO Controller
IRQ 50	GPIO Controller
IRQ 54	Microsoft ACPI-Compliant System
IRQ 55	Microsoft ACPI-Compliant System
IRQ 56	Microsoft ACPI-Compliant System
IRQ 57	Microsoft ACPI-Compliant System
IRQ 58	Microsoft ACPI-Compliant System
IRQ 59	Microsoft ACPI-Compliant System
IRQ 60	Microsoft ACPI-Compliant System
IRQ 61	Microsoft ACPI-Compliant System
IRQ 62	Microsoft ACPI-Compliant System

IRQ	Assignment
IRQ 63	Microsoft ACPI-Compliant System
IRQ 64	Microsoft ACPI-Compliant System
IRQ 65	Microsoft ACPI-Compliant System
IRQ 66	Microsoft ACPI-Compliant System
IRQ 67	Intel(R) Power Management IC Device
IRQ 67	Intel(R) Power Management IC Device
IRQ 67	Intel(R) Power Management IC Device
IRQ 67	Microsoft ACPI-Compliant System
IRQ 68	I2C HID Device
IRQ 68	Microsoft ACPI-Compliant System
IRQ 69	Broadcom 802.11 b/g/n Wireless SDIO Adapter
IRQ 69	Microsoft ACPI-Compliant System
IRQ 70	Microsoft ACPI-Compliant System
IRQ 71	Microsoft ACPI-Compliant System
IRQ 72	Microsoft ACPI-Compliant System
IRQ 73	Microsoft ACPI-Compliant System
IRQ 74	Microsoft ACPI-Compliant System
IRQ 75	Microsoft ACPI-Compliant System
IRQ 76	Microsoft ACPI-Compliant System
IRQ 77	Microsoft ACPI-Compliant System
IRQ 78	Microsoft ACPI-Compliant System
IRQ 79	Microsoft ACPI-Compliant System
IRQ 80	Microsoft ACPI-Compliant System
IRQ 81	Microsoft ACPI-Compliant System
IRQ 82	Microsoft ACPI-Compliant System
IRQ 83	Microsoft ACPI-Compliant System
IRQ 84	Microsoft ACPI-Compliant System
IRQ 85	Microsoft ACPI-Compliant System
IRQ 86	Intel(R) Dynamic Platform & Thermal Framework Processor Participant Driver
IRQ 86	Microsoft ACPI-Compliant System
IRQ 87	Microsoft ACPI-Compliant System

IRQ	Assignment
IRQ 88	Microsoft ACPI-Compliant System
IRQ 89	Microsoft ACPI-Compliant System
IRQ 90	Microsoft ACPI-Compliant System
IRQ 91	Microsoft ACPI-Compliant System
IRQ 92	Microsoft ACPI-Compliant System
IRQ 93	Microsoft ACPI-Compliant System
IRQ 94	Microsoft ACPI-Compliant System
IRQ 95	Microsoft ACPI-Compliant System
IRQ 96	Microsoft ACPI-Compliant System
IRQ 97	Microsoft ACPI-Compliant System
IRQ 98	Microsoft ACPI-Compliant System
IRQ 99	Microsoft ACPI-Compliant System
IRQ 100	Microsoft ACPI-Compliant System
IRQ 101	Microsoft ACPI-Compliant System
IRQ 102	Microsoft ACPI-Compliant System
IRQ 103	Microsoft ACPI-Compliant System
IRQ 104	Microsoft ACPI-Compliant System
IRQ 105	Microsoft ACPI-Compliant System
IRQ 106	Microsoft ACPI-Compliant System
IRQ 107	Microsoft ACPI-Compliant System
IRQ 108	Microsoft ACPI-Compliant System
IRQ 109	Microsoft ACPI-Compliant System
IRQ 110	Microsoft ACPI-Compliant System
IRQ 111	Microsoft ACPI-Compliant System
IRQ 112	Microsoft ACPI-Compliant System
IRQ 113	Microsoft ACPI-Compliant System
IRQ 114	Microsoft ACPI-Compliant System
IRQ 115	Microsoft ACPI-Compliant System
IRQ 116	Microsoft ACPI-Compliant System
IRQ 117	Microsoft ACPI-Compliant System
IRQ 118	Microsoft ACPI-Compliant System
IRQ 119	Microsoft ACPI-Compliant System
IRQ 120	Microsoft ACPI-Compliant System

IRQ	Assignment
IRQ 121	Microsoft ACPI-Compliant System
IRQ 122	Microsoft ACPI-Compliant System
IRQ 123	Microsoft ACPI-Compliant System
IRQ 124	Microsoft ACPI-Compliant System
IRQ 125	Microsoft ACPI-Compliant System
IRQ 126	Microsoft ACPI-Compliant System
IRQ 127	Microsoft ACPI-Compliant System
IRQ 128	Microsoft ACPI-Compliant System
IRQ 129	Microsoft ACPI-Compliant System
IRQ 130	Microsoft ACPI-Compliant System
IRQ 131	Microsoft ACPI-Compliant System
IRQ 132	Microsoft ACPI-Compliant System
IRQ 133	Microsoft ACPI-Compliant System
IRQ 134	Microsoft ACPI-Compliant System
IRQ 135	Microsoft ACPI-Compliant System
IRQ 136	Microsoft ACPI-Compliant System
IRQ 137	Microsoft ACPI-Compliant System
IRQ 138	Microsoft ACPI-Compliant System
IRQ 139	Microsoft ACPI-Compliant System
IRQ 140	Microsoft ACPI-Compliant System
IRQ 141	Microsoft ACPI-Compliant System
IRQ 142	Microsoft ACPI-Compliant System
IRQ 143	Microsoft ACPI-Compliant System
IRQ 144	Microsoft ACPI-Compliant System
IRQ 145	Microsoft ACPI-Compliant System
IRQ 146	Microsoft ACPI-Compliant System
IRQ 147	Microsoft ACPI-Compliant System
IRQ 148	Microsoft ACPI-Compliant System
IRQ 149	Microsoft ACPI-Compliant System
IRQ 150	Microsoft ACPI-Compliant System
IRQ 151	Microsoft ACPI-Compliant System
IRQ 152	Microsoft ACPI-Compliant System

IRQ	Assignment
IRQ 153	Microsoft ACPI-Compliant System
IRQ 154	Microsoft ACPI-Compliant System
IRQ 155	Microsoft ACPI-Compliant System
IRQ 156	Microsoft ACPI-Compliant System
IRQ 157	Microsoft ACPI-Compliant System
IRQ 158	Microsoft ACPI-Compliant System
IRQ 159	Microsoft ACPI-Compliant System
IRQ 160	Microsoft ACPI-Compliant System
IRQ 161	Microsoft ACPI-Compliant System
IRQ 162	Microsoft ACPI-Compliant System
IRQ 163	Microsoft ACPI-Compliant System
IRQ 164	Microsoft ACPI-Compliant System
IRQ 165	Microsoft ACPI-Compliant System
IRQ 166	Microsoft ACPI-Compliant System
IRQ 167	Microsoft ACPI-Compliant System
IRQ 168	Microsoft ACPI-Compliant System
IRQ 169	Microsoft ACPI-Compliant System
IRQ 170	Microsoft ACPI-Compliant System
IRQ 171	Microsoft ACPI-Compliant System
IRQ 172	Microsoft ACPI-Compliant System
IRQ 173	Microsoft ACPI-Compliant System
IRQ 174	Microsoft ACPI-Compliant System
IRQ 175	Microsoft ACPI-Compliant System
IRQ 176	Microsoft ACPI-Compliant System
IRQ 177	Microsoft ACPI-Compliant System
IRQ 178	Microsoft ACPI-Compliant System
IRQ 179	Microsoft ACPI-Compliant System
IRQ 180	Microsoft ACPI-Compliant System
IRQ 181	Microsoft ACPI-Compliant System
IRQ 182	Microsoft ACPI-Compliant System
IRQ 183	Microsoft ACPI-Compliant System
IRQ 184	Microsoft ACPI-Compliant System
IRQ 185	Microsoft ACPI-Compliant System

IRQ	Assignment
IRQ 186	Microsoft ACPI-Compliant System
IRQ 187	Microsoft ACPI-Compliant System
IRQ 188	Microsoft ACPI-Compliant System
IRQ 189	Microsoft ACPI-Compliant System
IRQ 190	Microsoft ACPI-Compliant System
IRQ 191	Microsoft ACPI-Compliant System
IRQ 192	Microsoft ACPI-Compliant System
IRQ 193	Microsoft ACPI-Compliant System
IRQ 194	Microsoft ACPI-Compliant System
IRQ 195	Microsoft ACPI-Compliant System
IRQ 196	Microsoft ACPI-Compliant System
IRQ 197	Microsoft ACPI-Compliant System
IRQ 198	Microsoft ACPI-Compliant System
IRQ 199	Microsoft ACPI-Compliant System
IRQ 200	Microsoft ACPI-Compliant System
IRQ 201	Microsoft ACPI-Compliant System
IRQ 202	Microsoft ACPI-Compliant System
IRQ 203	Microsoft ACPI-Compliant System
IRQ 204	Microsoft ACPI-Compliant System
IRQ 256	Microsoft ACPI-Compliant System
IRQ 257	Microsoft ACPI-Compliant System
IRQ 258	Microsoft ACPI-Compliant System
IRQ 259	Microsoft ACPI-Compliant System
IRQ 260	Microsoft ACPI-Compliant System
IRQ 261	Microsoft ACPI-Compliant System
IRQ 262	Microsoft ACPI-Compliant System
IRQ 263	Microsoft ACPI-Compliant System
IRQ 264	Microsoft ACPI-Compliant System
IRQ 265	Microsoft ACPI-Compliant System
IRQ 266	Microsoft ACPI-Compliant System
IRQ 267	Microsoft ACPI-Compliant System
IRQ 268	Microsoft ACPI-Compliant System

IRQ	Assignment
IRQ 269	Microsoft ACPI-Compliant System
IRQ 270	Microsoft ACPI-Compliant System
IRQ 271	Microsoft ACPI-Compliant System
IRQ 272	Microsoft ACPI-Compliant System
IRQ 273	Microsoft ACPI-Compliant System
IRQ 274	Microsoft ACPI-Compliant System
IRQ 275	Microsoft ACPI-Compliant System
IRQ 276	Microsoft ACPI-Compliant System
IRQ 277	Microsoft ACPI-Compliant System
IRQ 278	Microsoft ACPI-Compliant System
IRQ 279	Microsoft ACPI-Compliant System
IRQ 280	Microsoft ACPI-Compliant System
IRQ 281	Microsoft ACPI-Compliant System
IRQ 282	Microsoft ACPI-Compliant System
IRQ 283	Microsoft ACPI-Compliant System
IRQ 284	Microsoft ACPI-Compliant System
IRQ 285	Microsoft ACPI-Compliant System
IRQ 286	Microsoft ACPI-Compliant System
IRQ 287	Microsoft ACPI-Compliant System
IRQ 288	Microsoft ACPI-Compliant System
IRQ 289	Microsoft ACPI-Compliant System
IRQ 290	Microsoft ACPI-Compliant System
IRQ 291	Microsoft ACPI-Compliant System
IRQ 292	Microsoft ACPI-Compliant System
IRQ 293	Microsoft ACPI-Compliant System
IRQ 294	Microsoft ACPI-Compliant System
IRQ 295	Microsoft ACPI-Compliant System
IRQ 296	Microsoft ACPI-Compliant System
IRQ 297	Microsoft ACPI-Compliant System
IRQ 298	Microsoft ACPI-Compliant System
IRQ 299	Microsoft ACPI-Compliant System
IRQ 300	Microsoft ACPI-Compliant System
IRQ 301	Microsoft ACPI-Compliant System

IRQ	Assignment
IRQ 302	Microsoft ACPI-Compliant System
IRQ 303	Microsoft ACPI-Compliant System
IRQ 304	Microsoft ACPI-Compliant System
IRQ 305	Microsoft ACPI-Compliant System
IRQ 306	Microsoft ACPI-Compliant System
IRQ 307	Microsoft ACPI-Compliant System
IRQ 308	Microsoft ACPI-Compliant System
IRQ 309	Microsoft ACPI-Compliant System
IRQ 310	Microsoft ACPI-Compliant System
IRQ 320	Microsoft ACPI-Compliant System
IRQ 321	Microsoft ACPI-Compliant System
IRQ 322	Microsoft ACPI-Compliant System
IRQ 323	Microsoft ACPI-Compliant System
IRQ 324	Microsoft ACPI-Compliant System
IRQ 325	Microsoft ACPI-Compliant System
IRQ 326	Microsoft ACPI-Compliant System
IRQ 327	Microsoft ACPI-Compliant System
IRQ 328	Microsoft ACPI-Compliant System
IRQ 329	Microsoft ACPI-Compliant System
IRQ 330	Microsoft ACPI-Compliant System
IRQ 331	Microsoft ACPI-Compliant System
IRQ 332	Microsoft ACPI-Compliant System
IRQ 333	Microsoft ACPI-Compliant System
IRQ 334	Microsoft ACPI-Compliant System
IRQ 335	Microsoft ACPI-Compliant System
IRQ 336	Microsoft ACPI-Compliant System
IRQ 337	Microsoft ACPI-Compliant System
IRQ 338	Microsoft ACPI-Compliant System
IRQ 339	Microsoft ACPI-Compliant System
IRQ 340	Microsoft ACPI-Compliant System
IRQ 341	Microsoft ACPI-Compliant System
IRQ 342	Microsoft ACPI-Compliant System

IRQ	Assignment
IRQ 343	Microsoft ACPI-Compliant System
IRQ 344	Microsoft ACPI-Compliant System
IRQ 345	Microsoft ACPI-Compliant System
IRQ 346	Microsoft ACPI-Compliant System
IRQ 347	Microsoft ACPI-Compliant System
IRQ 348	Microsoft ACPI-Compliant System
IRQ 349	Microsoft ACPI-Compliant System
IRQ 350	Microsoft ACPI-Compliant System
IRQ 351	Microsoft ACPI-Compliant System
IRQ 352	Microsoft ACPI-Compliant System
IRQ 353	Microsoft ACPI-Compliant System
IRQ 354	Microsoft ACPI-Compliant System
IRQ 355	Microsoft ACPI-Compliant System
IRQ 356	Microsoft ACPI-Compliant System
IRQ 357	Microsoft ACPI-Compliant System
IRQ 358	Microsoft ACPI-Compliant System
IRQ 359	Microsoft ACPI-Compliant System
IRQ 360	Microsoft ACPI-Compliant System
IRQ 361	Microsoft ACPI-Compliant System
IRQ 362	Microsoft ACPI-Compliant System
IRQ 363	Microsoft ACPI-Compliant System
IRQ 364	Microsoft ACPI-Compliant System
IRQ 365	Microsoft ACPI-Compliant System
IRQ 366	Microsoft ACPI-Compliant System
IRQ 367	Microsoft ACPI-Compliant System
IRQ 368	Microsoft ACPI-Compliant System
IRQ 369	Microsoft ACPI-Compliant System
IRQ 370	Microsoft ACPI-Compliant System
IRQ 371	Microsoft ACPI-Compliant System
IRQ 372	Microsoft ACPI-Compliant System
IRQ 373	Microsoft ACPI-Compliant System
IRQ 374	Microsoft ACPI-Compliant System
IRQ 375	Microsoft ACPI-Compliant System

IRQ	Assignment
IRQ 376	Microsoft ACPI-Compliant System
IRQ 377	Microsoft ACPI-Compliant System
IRQ 378	Microsoft ACPI-Compliant System
IRQ 379	Microsoft ACPI-Compliant System
IRQ 380	Microsoft ACPI-Compliant System
IRQ 381	Microsoft ACPI-Compliant System
IRQ 382	Microsoft ACPI-Compliant System
IRQ 383	Microsoft ACPI-Compliant System
IRQ 384	Microsoft ACPI-Compliant System
IRQ 385	Microsoft ACPI-Compliant System
IRQ 386	Microsoft ACPI-Compliant System
IRQ 387	Microsoft ACPI-Compliant System
IRQ 388	Microsoft ACPI-Compliant System
IRQ 389	Microsoft ACPI-Compliant System
IRQ 390	Microsoft ACPI-Compliant System
IRQ 391	Microsoft ACPI-Compliant System
IRQ 392	Microsoft ACPI-Compliant System
IRQ 393	Microsoft ACPI-Compliant System
IRQ 394	Microsoft ACPI-Compliant System
IRQ 395	Microsoft ACPI-Compliant System
IRQ 396	Microsoft ACPI-Compliant System
IRQ 397	Microsoft ACPI-Compliant System
IRQ 398	Microsoft ACPI-Compliant System
IRQ 399	Microsoft ACPI-Compliant System
IRQ 400	Microsoft ACPI-Compliant System
IRQ 401	Microsoft ACPI-Compliant System
IRQ 402	Microsoft ACPI-Compliant System
IRQ 403	Microsoft ACPI-Compliant System
IRQ 404	Microsoft ACPI-Compliant System
IRQ 405	Microsoft ACPI-Compliant System
IRQ 406	Microsoft ACPI-Compliant System
IRQ 407	Microsoft ACPI-Compliant System

IRQ	Assignment
IRQ 408	Microsoft ACPI-Compliant System
IRQ 409	Microsoft ACPI-Compliant System
IRQ 410	Microsoft ACPI-Compliant System
IRQ 411	Microsoft ACPI-Compliant System
IRQ 412	Microsoft ACPI-Compliant System
IRQ 413	Microsoft ACPI-Compliant System
IRQ 414	Microsoft ACPI-Compliant System
IRQ 415	Microsoft ACPI-Compliant System
IRQ 416	Microsoft ACPI-Compliant System
IRQ 417	Microsoft ACPI-Compliant System
IRQ 418	Microsoft ACPI-Compliant System
IRQ 419	Microsoft ACPI-Compliant System
IRQ 420	Microsoft ACPI-Compliant System
IRQ 421	Microsoft ACPI-Compliant System
IRQ 422	Microsoft ACPI-Compliant System
IRQ 423	Microsoft ACPI-Compliant System
IRQ 424	Microsoft ACPI-Compliant System
IRQ 425	Microsoft ACPI-Compliant System
IRQ 426	Microsoft ACPI-Compliant System
IRQ 427	Microsoft ACPI-Compliant System
IRQ 428	Microsoft ACPI-Compliant System
IRQ 429	Microsoft ACPI-Compliant System
IRQ 430	Microsoft ACPI-Compliant System
IRQ 431	Microsoft ACPI-Compliant System
IRQ 432	Microsoft ACPI-Compliant System
IRQ 433	Microsoft ACPI-Compliant System
IRQ 434	Microsoft ACPI-Compliant System
IRQ 435	Microsoft ACPI-Compliant System
IRQ 436	Microsoft ACPI-Compliant System
IRQ 437	Microsoft ACPI-Compliant System
IRQ 438	Microsoft ACPI-Compliant System
IRQ 439	Microsoft ACPI-Compliant System
IRQ 440	Microsoft ACPI-Compliant System

IRQ	Assignment
IRQ 441	Microsoft ACPI-Compliant System
IRQ 442	Microsoft ACPI-Compliant System
IRQ 443	Microsoft ACPI-Compliant System
IRQ 444	Microsoft ACPI-Compliant System
IRQ 445	Microsoft ACPI-Compliant System
IRQ 446	Microsoft ACPI-Compliant System
IRQ 447	Microsoft ACPI-Compliant System
IRQ 448	Microsoft ACPI-Compliant System
IRQ 449	Microsoft ACPI-Compliant System
IRQ 450	Microsoft ACPI-Compliant System
IRQ 451	Microsoft ACPI-Compliant System
IRQ 452	Microsoft ACPI-Compliant System
IRQ 453	Microsoft ACPI-Compliant System
IRQ 454	Microsoft ACPI-Compliant System
IRQ 455	Microsoft ACPI-Compliant System
IRQ 456	Microsoft ACPI-Compliant System
IRQ 457	Microsoft ACPI-Compliant System
IRQ 458	Microsoft ACPI-Compliant System
IRQ 459	Microsoft ACPI-Compliant System
IRQ 460	Microsoft ACPI-Compliant System
IRQ 461	Microsoft ACPI-Compliant System
IRQ 462	Microsoft ACPI-Compliant System
IRQ 463	Microsoft ACPI-Compliant System
IRQ 464	Microsoft ACPI-Compliant System
IRQ 465	Microsoft ACPI-Compliant System
IRQ 466	Microsoft ACPI-Compliant System
IRQ 467	Microsoft ACPI-Compliant System
IRQ 468	Microsoft ACPI-Compliant System
IRQ 469	Microsoft ACPI-Compliant System
IRQ 470	Microsoft ACPI-Compliant System
IRQ 471	Microsoft ACPI-Compliant System
IRQ 472	Microsoft ACPI-Compliant System

IRQ	Assignment
IRQ 473	Microsoft ACPI-Compliant System
IRQ 474	Microsoft ACPI-Compliant System
IRQ 475	Microsoft ACPI-Compliant System
IRQ 476	Microsoft ACPI-Compliant System
IRQ 477	Microsoft ACPI-Compliant System
IRQ 478	Microsoft ACPI-Compliant System
IRQ 479	Microsoft ACPI-Compliant System
IRQ 480	Microsoft ACPI-Compliant System
IRQ 481	Microsoft ACPI-Compliant System
IRQ 482	Microsoft ACPI-Compliant System
IRQ 483	Microsoft ACPI-Compliant System
IRQ 484	Microsoft ACPI-Compliant System
IRQ 485	Microsoft ACPI-Compliant System
IRQ 486	Microsoft ACPI-Compliant System
IRQ 487	Microsoft ACPI-Compliant System
IRQ 488	Microsoft ACPI-Compliant System
IRQ 489	Microsoft ACPI-Compliant System
IRQ 490	Microsoft ACPI-Compliant System
IRQ 491	Microsoft ACPI-Compliant System
IRQ 492	Microsoft ACPI-Compliant System
IRQ 493	Microsoft ACPI-Compliant System
IRQ 494	Microsoft ACPI-Compliant System
IRQ 495	Microsoft ACPI-Compliant System
IRQ 496	Microsoft ACPI-Compliant System
IRQ 497	Microsoft ACPI-Compliant System
IRQ 498	Microsoft ACPI-Compliant System
IRQ 499	Microsoft ACPI-Compliant System
IRQ 500	Microsoft ACPI-Compliant System
IRQ 501	Microsoft ACPI-Compliant System
IRQ 502	Microsoft ACPI-Compliant System
IRQ 503	Microsoft ACPI-Compliant System
IRQ 504	Microsoft ACPI-Compliant System
IRQ 505	Microsoft ACPI-Compliant System

IRQ	Assignment
IRQ 506	Microsoft ACPI-Compliant System
IRQ 507	Microsoft ACPI-Compliant System
IRQ 508	Microsoft ACPI-Compliant System
IRQ 509	Microsoft ACPI-Compliant System
IRQ 510	Microsoft ACPI-Compliant System
IRQ 511	Microsoft ACPI-Compliant System
IRQ 1028	Broadcom Serial Bus Driver over UART Bus Enumerator
IRQ 1029	Realtek I2S Audio Codec
IRQ 1030	GPIO Buttons Driver
IRQ 1031	GPIO Buttons Driver
IRQ 1032	GPIO Buttons Driver
IRQ 1033	GPIO Buttons Driver
IRQ 1034	GPIO Buttons Driver
IRQ 1035	Intel(R) Battery Management Device
IRQ 1036	Intel l(R) SD Host Controller
IRQ -4	Intel(R) HD Graphics
IRQ -3	Intel(R) Trusted Execution Engine Interface
IRQ -2	Intel(R) USB 3.0 eXtensible Host Controller - 1.0 (Microsoft)

Note: These resource information were gathered using Windows 10 (the IRQ could be assigned differently depending on OS).

I/O Map

I/O Map	Assignment
0x00000000-0x0000006F	PCI Express Root Complex
0x00000020-0x00000021	Programmable interrupt controller
0x00000024-0x00000025	Programmable interrupt controller
0x00000028-0x00000029	Programmable interrupt controller
0x0000002C-0x0000002D	Programmable interrupt controller
0x0000002E-0x0000002F	Motherboard resources
0x00000030-0x00000031	Programmable interrupt controller
0x00000034-0x00000035	Programmable interrupt controller
0x00000038-0x00000039	Programmable interrupt controller
0x0000003C-0x0000003D	Programmable interrupt controller
0x00000040-0x00000043	System timer
0x0000004E-0x0000004F	Motherboard resources
0x00000050-0x00000053	System timer
0x00000061-0x00000061	Motherboard resources
0x00000063-0x00000063	Motherboard resources
0x00000065-0x00000065	Motherboard resources
0x00000067-0x00000067	Motherboard resources
0x00000070-0x00000070	Motherboard resources
0x00000070-0x00000077	System CMOS/real time clock
0x00000078-0x00000CF7	PCI Express Root Complex
0x00000080-0x0000008F	Motherboard resources
0x00000092-0x00000092	Motherboard resources
0x000000B2-0x000000B3	Motherboard resources
0x00000400-0x00000047F	Motherboard resources
0x00000500-0x0000005FE	Motherboard resources

I/O Map	Assignment
0x00000600-0x00000061F	Motherboard resources
0x00000680-0x00000069F	Motherboard resources
0x0000164E-0x0000164F	Motherboard resources
0x000000A0-0x000000A1	Programmable interrupt controller
0x000000A4-0x000000A5	Programmable interrupt controller
0x000000A8-0x000000A9	Programmable interrupt controller
0x000000AC-0x000000AD	Programmable interrupt controller
0x000000B0-0x000000B1	Programmable interrupt controller
0x000000B4-0x000000B5	Programmable interrupt controller
0x000000B8-0x000000B9	Programmable interrupt controller
0x000000BC-0x000000BD	Programmable interrupt controller
0x000004D0-0x000004D1	Programmable interrupt controller
0x000003F8-0x000003FF	Communication Post(COM1)
0x00001000-0x00001007	Intel(R) HD Graphics
0x00000D00-0x0000FFFF	PCI Express Root Complex

Memory Map

Memory Map	Assignment
0x000A0000-0x000BFFFF	PCI Express Root Complex
0x000C0000-0x000DFFFF	PCI Express Root Complex
0x000E0000-0x000FFFFF	PCI Express Root Complex
0x20000000-0x201FFFFF	Intel(R) SST Audio Device (WDM)
0x7D000001-0x7F000000	PCI Express Root Complex
0x80000000-0x8FFFFFFF	Intel(R) HD Graphics
0x80000000-0x908FFFFE	PCI Express Root Complex
0x90000000-0x903FFFFF	Intel(R) HD Graphics
0x90600000-0x906FFFFF	Intel(R) Trusted Execution Engine Interface
0x90700000-0x907FFFFF	Intel(R) Trusted Execution Engine Interface
0x90800000-0x9080FFFF	Intel(R) USB 3.0 eXtensible Host Controller - 1.0(Microsoft)
0x90900000-0x90900FFF	Intel(R) SST Audio Device (WDM)
0x90901000-0x90901FFF	Intel(R) SD Host Controller
0x90908000-0x90908FFF	I2C Controller
0x9090A000-0x9090AFFF	I2C Controller
0x9090C000-0x9090CFFF	I2C Controller
0x9090E000-0x9090EFFF	I2C Controller
0x90910000-0x90910FFF	I2C Controller
0x90913000-0x90913FFF	UART Controller
0x90919000-0x90919FFF	UART Controller
0x9091B000-0x9091BFFF	Intel(R) SD Host Controller
0x9091D000-0x9091DFFF	Intel(R) SD Host Controller
0x90A00000-0x90BFFFFF	Intel(R) SD Host Controller(WDM)
0x90C00000-0x90FFFFFF	Intel(R) AVStream Camera
0x90C00000-0x90FFFFFF	PCI Express Root Complex
0xE00000D0-0xE00000DB	Intel(R) Sideband Fabric Device
0xFED00000-0xFED003FF	High Precision event timer
0xFED05000-0xFED057FF	Intel(R) Dynamic Platform & Thermal

Memory Map	Assignment
	Framework Processor Participant Driver
0xFED0C000-0xFED0CFFF	GPIO Controller
0xFED0D000-0xFED0DFFF	GPIO Controller
0xFED0E000-0xFED0EFFF	GPIO Controller
0xFED40000-0xFED40FFF	PCI Express Root Complex
0xFF000000-0xFFFFFFFF	Legacy device

System BIOS Update Procedure

System BIOS Update from O.S.
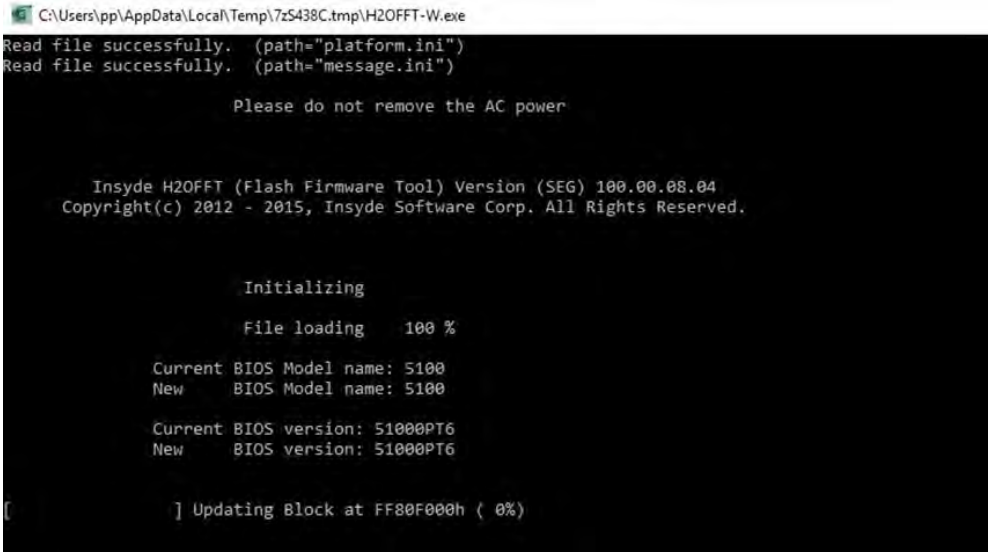
1. Prepare a bootable media (e.g. USB storage device) which can boot the system to UEFI32 prompt.
2. Download and save the BIOS file (e.g. 51000PT6.exe) to the bootable device.
3. Press the Power Button to boot up the system into the O.S. with USB storage device (Windows 10 32 bits)
4. Run the BIOS file (e.g. 51000PT6.exe) in USB storage device on O.S (Windows 10 32 bits)
5. During the update procedure, you will see the BIOS update process status and its percentage. Beware! Do not turn off system power or reset your computer if the whole update procedure is not complete yet; otherwise, it may crash the BIOS ROM and the system will be unable to boot up next time.
6. After the BIOS update procedure is completed, the following message will be shown (e.g. Updating Block at FFFFFFFFh (100%):