Test Report

Report No.	:	MTi260313014-0106E2
Date of Issue	:	2026-04-20
Applicant	:	iOttie Inc.
Product	:	Power Bank
Model(s)	:	VLXPCG501, VLXPCG501BT1, VLXPCG501OR, VLXPCG501SV
FCC ID	:	2AMRO-VLXPCG501OR

Shenzhen Microtest Co., Ltd.

Table of contents

1 General Description 4

1.1 Description of the EUT 4
1.2 Description of test modes 4
1.3 Description of support units 5

2 Measurement uncertainty 5

3 Test facilities and accreditations 5

3.1 Test laboratory 5

4 List of test equipment 6

5 Test result 7

5.2 Test setup 8
5.3 Test Procedures 8
5.4 Information of test equipment 9
5.5 Test results 10

Photographs of the Test Setup 14

Photographs of the EUT 15

TEST REPORT

Report No.: MTi260313014-0106E2

Test Result Certification		
Applicant	iOttie Inc.	
Applicant Address	470 7th ave 6FL, New York, NY, 10018	
Manufacturer	iOttie Inc.	
Manufacturer Address	470 7th ave 6FL, New York, NY, 10018	
Factory	Dongguan Xiadian Electronic Technology Co., Ltd	
Factory Address	Room 504, Building 1, No. 125, Yuquan Road, Fenggang Town, Dongguan City, Guangdong Province, China	
Product description		
Product name	Power Bank	
Trademark	iOttie	
Model name	VLXPCG501	
Series Model(s)	VLXPCG501BT1, VLXPCG501OR, VLXPCG501SV	
Standards	FCC CFR 47 PART 1, § 1.1310 FCC CFR 47 Part 2.1093	
Test method	KDB 680106 D01 Wireless Power Transfer v04	
Testing Information		
Date of test	2026-04-09 to 2026-04-10	
Test Result	Pass	
Prepared by:	Manus Wang	Manus Wang
Reviewed by:	David Lee	David. Lee
Approved by:	Lewis Lian	Lewis Lian

1 General Description

1.1 Description of the EUT

Product name:	Power Bank
Model name:	VLXPCG501
Series Model:	VLXPCG501BT1, VLXPCG501OR, VLXPCG501SV
Model difference:	All the models are the same circuit and module, except the model name and appearance. (The side hook and color are different)
Electrical rating:	Battery Capacity: 5000mAh, 3.85V/19.25Wh Rated Capacity: 5VDC/3A （2893mAh), 9VDC/2.22A （1618mAh), 12VDC/1.67A（1378mAh) Type-C Input: 5VDC/3A, 9VDC/2A, 12VDC/1.5A Type-C Output: 5VDC/3A, 9VDC/2.22A, 12VDC/1.67A Wireless Output: 5W/7.5W/10W/15W
Accessories:	Cable: USB C to C 0.15m*1
Hardware version:	JT331-188-LED-V1.0
Software version:	JTMCU_V1.0.0_HW10_RELEASE
Test sample(s) number:	MTi260313014-01-R001
RF specification:	
Operation frequency:	115-205KHz
Modulation type:	ASK
Antenna type:	Coil

1.2 Description of test modes

All the test modes were carried out with the EUT in normal operation, the final test mode of the EUT was the worst test mode for emission test, which was shown in this report and defined as:

No.	Emission test modes
Mode1	Charging+Wireless Output(5W)
Mode2	Wireless Output(5W)
Mode3	Wireless Output(7.5W)
Mode4	Wireless Output(10W)
Mode5	Wireless Output(15W)
Mode7	Stand by

1.3 Description of support units

The EUT has been tested as an independent unit together with other necessary accessories or support units. The following support units or accessories were used to form a representative test configuration during the tests.

Support equipment list			
Description	Model	Serial No.	Manufacturer
Mobile phone	Find X3	bf6e6b3b	OPPO
Support cable list			
Description	Length (m)	From	To
/	/	/	/

2 Measurement uncertainty

Parameter	Expanded Uncertainty
Magnetic field measurements(3kHz~10MHz)	±14.8%
Electric field measurements(3kHz~10MHz)	±17.5%

This uncertainty represents an expanded uncertainty expressed at approximately the 95% confidence level using a coverage factor of k=2.

3 Test facilities and accreditations

3.1 Test laboratory

Test laboratory:	Shenzhen Microtest Co., Ltd.
Test site location:	101, No. 7, Zone 2, Xinxing Industrial Park, Fuhai Avenue, Xinhe Community, Fuhai Street, Bao'an District, Shenzhen, Guangdong, China
Telephone:	(86-755)88850135
Fax:	(86-755)88850136
CNAS Registration No.:	CNAS L5868
FCC Registration No.:	448573

4 List of test equipment

No.	Equipment	Manufacturer	Model	Serial No.	Cal. date	Cal. Due
MTI-E143	Near-field Electric and Magnetic Field Sensor System	SPEAG	MAGPy-8H3 D+E3D	3101	2024/3/12	2027/3/11

No.	Equipment	Manufacturer	Model	Software version:	Cal. date	Cal. Due
MTI-E016S	MPE test software	SPEAG	MAGPY 2.6	2.6	/	/

5 Test result

5.1.1 Requirement

§1.1310: The criteria listed in the following table shall be used to evaluate the environment impact of human exposure to radio frequency (RF) radiation as specified in §1.1307(b), except in the case of portable devices which shall be evaluated according to the provisions of FCC part 2.1093 of this chapter.

Table 1 to §1.1310(e)(1) - Limits for Maximum Permissible Exposure (MPE)

Frequency range (MHz)	Electric field strength (V/m)	Magnetic field strength (A/m)	Power density (mW/cm^2)	Averaging time (minutes)
(i) Limits for Occupational/Controlled Exposure				
0.3-3.0	614	1.63	*(100)	≤6
3.0-30	1842/f	4.89/f	*($900/f^2$)	<6
30-300	61.4	0.163	1.0	<6
300-1500			f/300	<6
1500-100000			5	<6
(ii) Limits for General Population/Uncontrolled Exposure				
0.3-1.34	614	1.63	*(100)	<30
1.34-30	824/f	2.19/f	*($180/f^2$)	<30
30-300	27.5	0.073	0.2	<30
300-1500			f/1500	<30
1500-100000			1.0	<30

f = frequency in MHz
* = Plane-wave equivalent power density

Note 1: Occupational/controlled exposure limits apply in situations in which persons are exposed as a consequence of their employment provided those persons are fully aware of the potential for exposure and can exercise control over their exposure.

Note 2: General population/uncontrolled exposure limits apply in situations in which the general public may be exposed, or in which persons who are exposed as a consequence of their employment may not be fully aware of the potential for exposure or cannot exercise control over their exposure.

5.2 Test setup

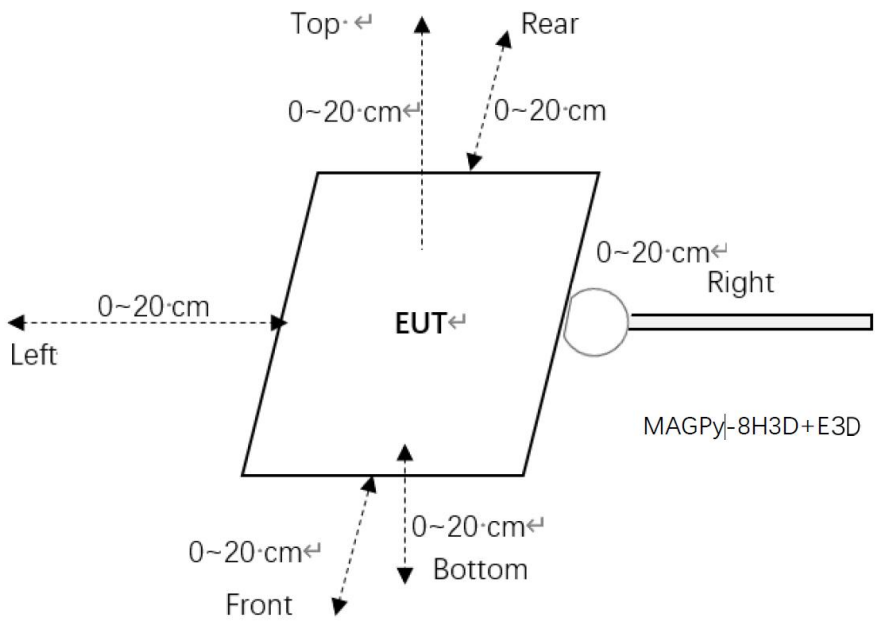

Note: tips mode of the test probe is used for 0cm measurement.

5.3 Test Procedures

a. H-field measurements should be taken 0 cm ~ 20 cm with 2 cm increments from the center of the probe.

The center of the probe to the tip surface of the probe is 18.5 mm, so the directly testing can be performed at the probe center from 2 cm to 20 cm.

To measure the 0 cm H-filed, the probe tip mode is used. The total H-field at the tip-surface $H_{tip-surface}$ can be extrapolated using the total H-field measured at the top and bottom sensors, H_{top} and H_{bottom}, as well as the normalized H-field gradient G_n. The field extrapolation formula is a polynomial function of G_n (Δd = 18.5 mm)

$$H_{tip-surface} = \frac{H_{bottom} + H_{top}}{2} \sum_{i=0}^{7} ci(G_n \Delta d)^i$$

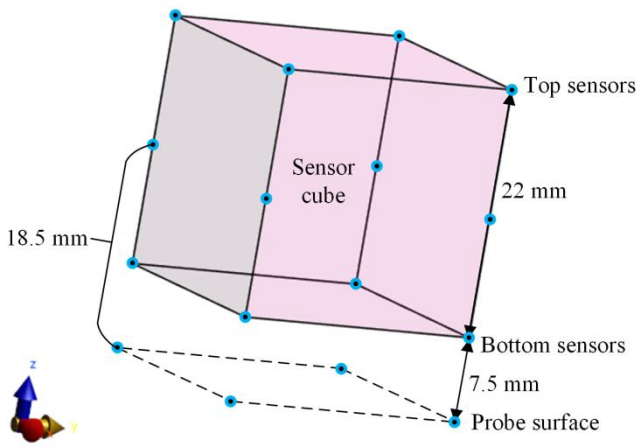

5.4 Information of test equipment

Test equipment: MAGPy-8H3D+E3D	
Diameter	60mm
8 isotropic H-field sensors	Concentric loops of 1cm^2 arranged at the corner of a cube of 22mm side length
1 isotropic E-field sensor	Orthogonal dipole/monopple(arm length:50mm)
Measurement center	18.5mm from the probe tip
Dimensions	110*635*35mm (MAGPy-8H3D+E3D V2 & MAGPy-DAS V2)

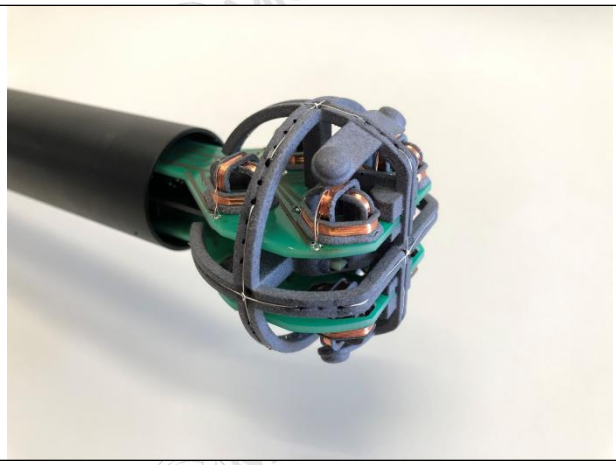

Test probe, without the casing

Item	Specification
Test frequency range:	3kHz ~ 10MHz
Probe sensitivity	E-filed: 0.08-2000 V/m H-filed: 0.1-3200 A/m
Probe level response	E-filed: ±1dB H-field: ±1dB
linearity error	E-filed: ±0.3dB H-field: ±0.3dB
Isotropy	E-filed: ±0.8dB H-field: ±0.6dB

5.5 Test results

All client power has been assessed (1%, 50%, 99%), and the 1% battery status of client device was the worst.
Test condition 1: Mode5 operating mode with client device (1 % battery status of client device)
-estimated value: 0cm

Estimated value for H-Filed Strength at 0 cm from the edges surrounding the EUT (A/m)

Probe Position	H–field (A/m)		
	Measurement	Limit	Percentage (%)
Z axis	1.50	1.63	92.02%
Left	1.10		
Right	1.16		
Front	0.89		
Rear	0.77		
Bottom	0.64		

Test condition 1: Mode5 operating mode with client device (1 % battery status of client device)
- Test distance: 2cm

Probe Position	H–field (A/m)		
	Measurement	Limit	Percentage (%)
Z axis	0.89	1.63	82.82%
Left	1.35		
Right	1.15		
Front	0.64		
Rear	0.84		
Bottom	0.77		

Test condition 1: Mode5 operating mode with client device (1 % battery status of client device)
- Test distance: 4cm

Probe Position	H–field (A/m)		
	Measurement	Limit	Percentage (%)
Z axis	0.47	1.63	29.45%
Left	0.480		
Right	0.42		
Front	0.21		
Rear	0.32		
Bottom	0.300		

Test condition 1: Mode5 operating mode with client device (1 % battery status of client device)
- Test distance: 6cm

Probe Position	H–field (A/m)		
	Measurement	Limit	Percentage (%)
Z axis	0.21	1.63	15.34%
Left	0.250		
Right	0.21		
Front	0.13		
Rear	0.19		
Bottom	0.150		

Test condition 1: Mode5 operating mode with client device (1 % battery status of client device)
- Test distance: 8cm

Probe Position	H–field (A/m)		
	Measurement	Limit	Percentage (%)
Z axis	0.09	1.63	9.20%
Left	0.15		
Right	0.11		
Front	0.07		
Rear	0.12		
Bottom	0.09		

Test condition 1: Mode5 operating mode with client device (1 % battery status of client device)
- Test distance: 10cm

Probe Position	H–field (A/m)		
	Measurement	Limit	Percentage (%)
Z axis	0.04	1.63	4.91%
Left	0.08		
Right	0.07		
Front	0.05		
Rear	0.02		
Bottom	0.02		

Test condition 1: Mode5 operating mode with client device (1 % battery status of client device)
- Test distance: 12cm

Probe Position	H–field (A/m)		
	Measurement	Limit	Percentage (%)
Z axis	0.040	1.63	4.72%
Left	0.077		
Right	0.005		
Front	0.03		
Rear	0.02		
Bottom	0.02		

Test condition 1: Mode5 operating mode with client device (1 % battery status of client device)
- Test distance: 14cm

Probe Position	H–field (A/m)		
	Measurement	Limit	Percentage (%)
Z axis	0.038	1.63	4.11%
Left	0.067		
Right	0.004		
Front	0.023		
Rear	0.019		
Bottom	0.02		

Test condition 1: Mode5 operating mode with client device (1 % battery status of client device)
- Test distance: 16cm

Probe Position	H–field (A/m)		
	Measurement	Limit	Percentage (%)
Z axis	0.035	1.63	3.68%
Left	0.060		
Right	0.0038		
Front	0.020		
Rear	0.019		
Bottom	0.015		

Test condition 1: Mode5 operating mode with client device (1 % battery status of client device)
- Test distance: 18cm

Probe Position	H–field (A/m)		
	Measurement	Limit	Percentage (%)
Z axis	0.030	1.63	3.07%
Left	0.050		
Right	0.0030		
Front	0.018		
Rear	0.014		
Bottom	0.014		

Test condition 1: Mode5 operating mode with client device (1 % battery status of client device)
- Test distance: 20cm

Probe Position	H–field (A/m)		
	Measurement	Limit	Percentage (%)
Z axis	0.028	1.63	2.15%
Left	0.035		
Right	0.0022		
Front	0.015		
Rear	0.010		
Bottom	0.010		

Photographs of the Test Setup

See the Appendix - Test Setup Photos.

Photographs of the EUT

See the Appendix - EUT Photos.

Statement

1. This report is invalid without the seal and signature of the laboratory.

2. The test results of this report are only responsible for the samples submitted.Client shall be responsible for representativeness of the sample and authenticity of the material.
3. The report shall not be partially reproduced without the written consent of the Laboratory.
4. This report is invalid if transferred, altered or tampered with in any form without authorization.
5. The observations or tests with special mark fall outside the scope of accreditation, and are only used for purpose of commission, research, training, internal quality control etc.
6. Any objection to this report shall be submitted to the laboratory within 15 days from the date of receipt of the report.

****** END OF REPORT ******