Translated from Chinese (Simplified) to English - www.onlinedoctranslator.com

SIRUI

150W Handheld Pocket Spotlight

C150X User Manual

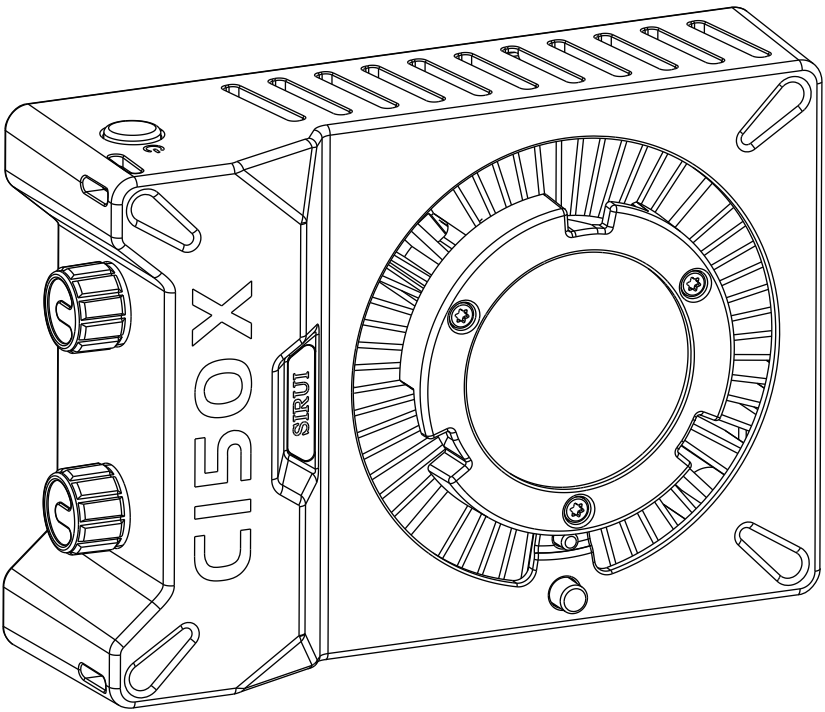

Preface

C150X LED photography light is a high brightness, portable fill light that supports brightness and color temperature adjustment.

The power supply mode design can be fixed on the light stand or used by hand. It is easy to operate and can be used for landscape photography.

Photography, video shooting, live broadcast, wedding photography, children's photography and other scenes.

Main Features

1. Lightweight and portable, flexible for indoor and outdoor lighting.

2. Multiple scenario special effects modes provide more creative possibilities.

3. High brightness and uniform light output make the picture more textured.

4. Equipped with silent fan for heat dissipation, it ensures the stable operation of LED without generating excessive noise.

5. Multi-light joint control, support APP Bluetooth control.

6. Supports Boris mount adapter, universal mainstream accessories, more convenient light control

7. Support multiple power supply modes, not limited by power supply.

Item List

Standalone version: C150X

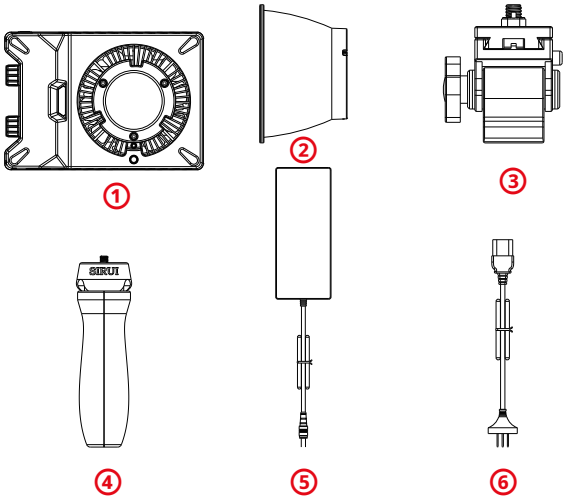

① Lamp body ② Reflector ③ Pitch ④ Tripod handle ⑤ Adapter

⑥ AC power cord

Package version: C150X COMBO

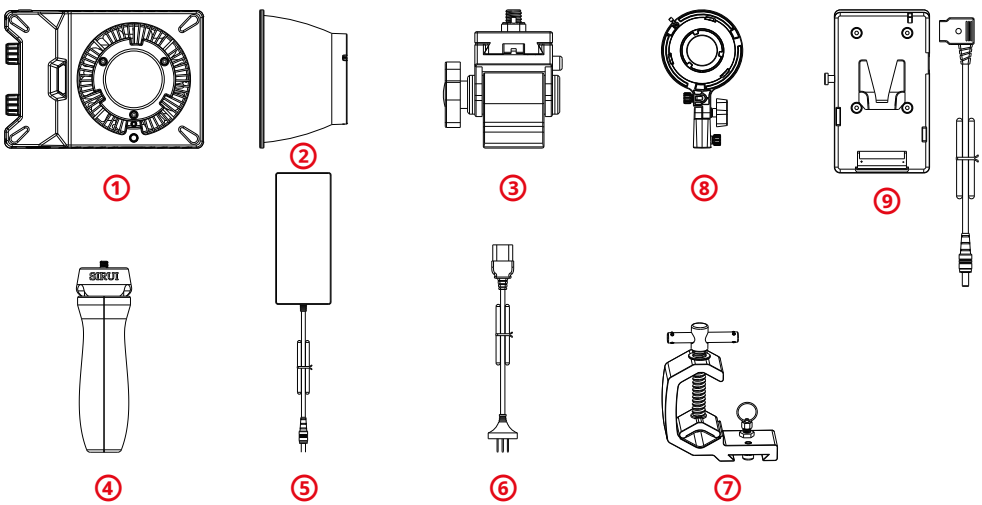

① Lamp body ② Reflector ③ Pitch ④ Tripod handle ⑤ Adapter

⑥ AC power cord ⑦ V-mount battery mounting bracket ⑧ Baorong bayonet adapter ring ⑨ V-mount battery mounting kit

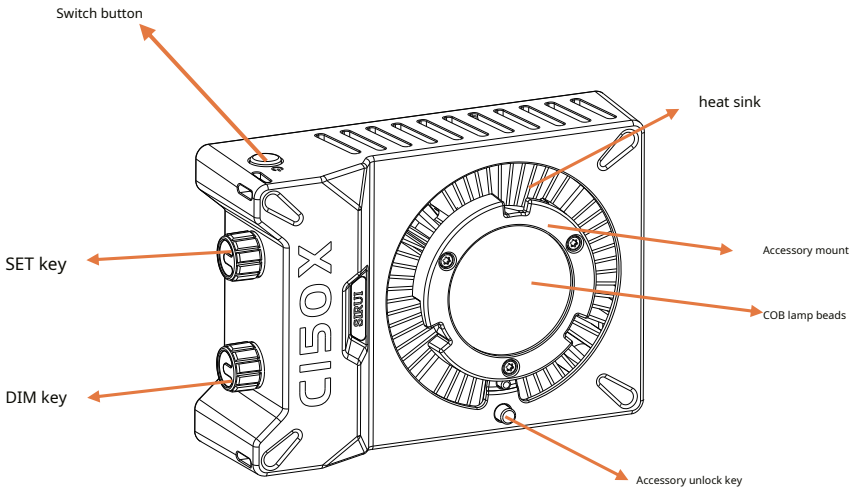
Switch button
heat sink
SET key
Accessory mount
COB lamp beads
DIM key
Accessory unlock key
C150X
SIRUI

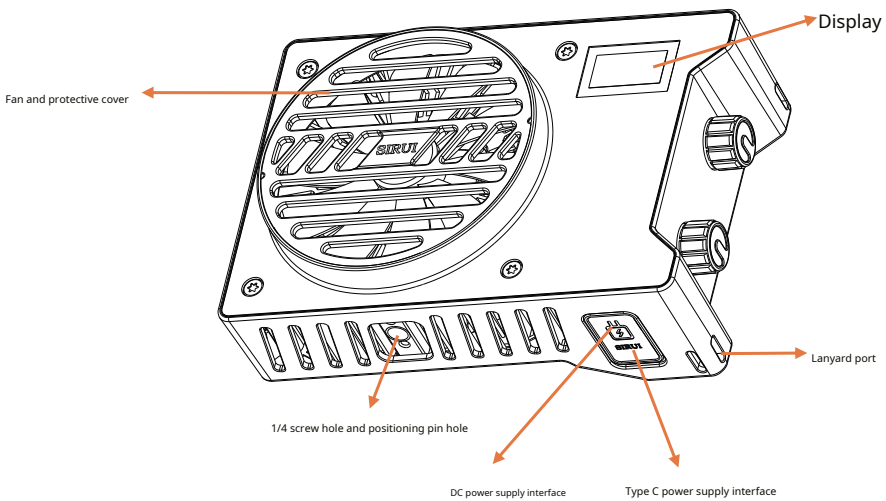
Display
Fan and protective cover
SIRUI
Lanyard port
1/4 screw hole and positioning pin hole
DC power supply interface
Type C power supply interface

This product does not contain batteries. To ensure the normal operation of the fill light, please use the following power supply methods:

1. DC power supply

1) Connect the DC power adapter to the DC power supply interface of the fill light and the AC power socket, and the fill light can be turned on.

powered by.

100-240V Power Supply:

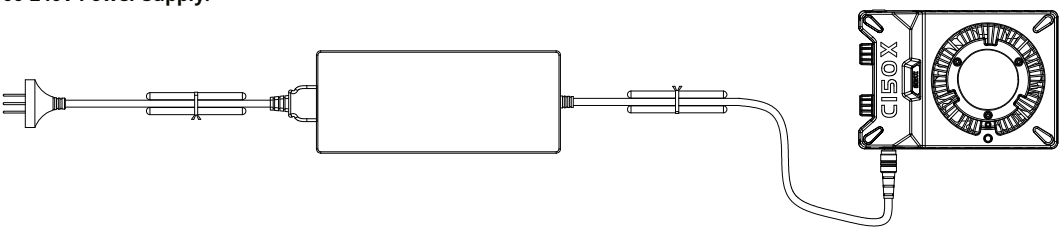

2) V-mount battery 12V-33.6V power supply, you need to use the V-mount battery holder to load the battery and then plug it into the DC port for power supply.

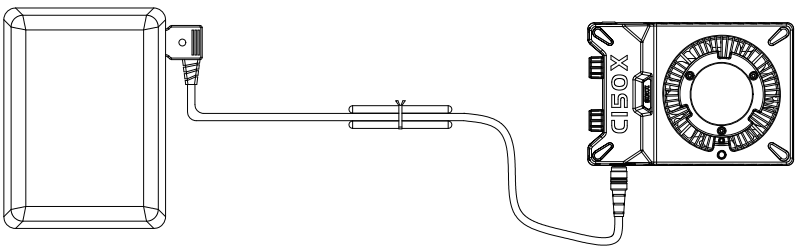

2. Type C power supply

Powered by a charger/power bank that supports the PD fast charging protocol. It is recommended to use a charger/power bank that supports the PD fast charging protocol and has a power greater

100W USB charger. When the input power is insufficient, the brightness of the fill light cannot be adjusted to 100%.

Power Bank:

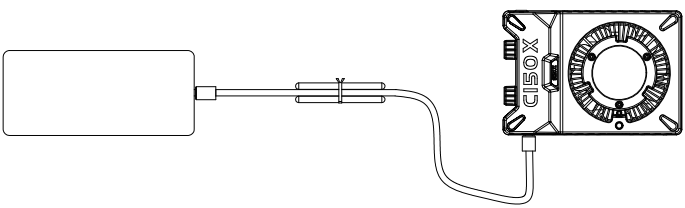

Notice:

① When the input voltage is lower than 12V or higher than 34V, the light cannot be turned on.

② V-mount batteries need to be purchased separately.

③ PD fast charging charger/power bank needs to be purchased separately.

3. Power supply mode and brightness limit

Different power supply modes have different powers and corresponding brightness. Please refer to the following for details:

Power supply mode	Current and voltage	model	Fan H setting	Fan M	Fan OFF
adapter	28V 6.4A	CCT	100%	50%	10%
		FX	100%	50%	10%
V-mount battery powered	12V-14V	CCT	50%	50%	10%
		FX	50%	50%	10%
	14V-16.8V	CCT	64%	50%	10%
		FX	64%	50%	10%
	16.8V-20.4V	CCT	77%	50%	10%
		FX	77%	50%	10%
	20.4V-24V	CCT	100%	50%	10%
		FX	100%	50%	10%
	24V-25V	CCT	100%	50%	10%
		FX	100%	50%	10%
	25V-33.6V	CCT	100%	50%	10%
		FX	100%	50%	10%
PD Power Supply	PD100W	CCT	60%	50%	10%
		FX	60%	50%	10%
	PD65W	CCT	38%	38%	10%
		FX	38%	38%	10%
	PD30W	CCT	18%	18%	10%
		FX	18%	18%	10%
PD100W Power Bank		CCT	60%	50%	10%
		FX	60%	50%	10%

Instructions

1. Get started

1.1. Turn on and off the machine

Press and hold the power button for 2s to turn the light on and off.

2. Mode selection

Short press the SET button to switch between CCT color temperature and FX special effects mode

2.1 Color Temperature Mode

Short press the SET button to switch to CCT color temperature mode

Color temperature adjustment: Rotate the SET button to adjust the color temperature between 2700K-6500K.

Brightness adjustment: Rotate the DIM button to adjust the brightness value from 0-100%.

2.2 Special Effects Mode

Short press the SET button to switch to special effect mode

Brightness adjustment: Rotate the DIM button to adjust the brightness from 0-100%.

Special effect switching: Rotate the SET button to switch special effects, and short press the DIM button to switch frequency A/B/C.

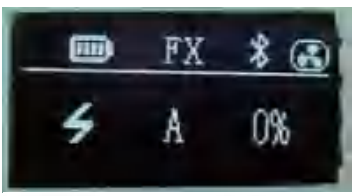

序号	显示	场景	显示A	显示B	显示C
1		闪电	间歇	频繁	持续
2		闪光灯	闪光	发布会	狗仔队
3		故障灯	间歇	频繁	持续
4	TV	电视荧幕	慢速	中速	快速
5		蜡烛	间歇	频繁	持续
6		火焰	柴火	篝火	火灾
7		烟花	短暂	连续	演出
8		爆炸	间歇	频繁	持续
9		色温循环	慢速	中速	快速
10		脉冲	慢速	中速	快速
11		电焊	间歇	频繁	持续
12	SOS	SOS	慢速	中速	快速

3. Set up menu functions

Long press the SET button to enter the settings menu page:

3.1 Bluetooth switch: Rotate the DIM button to select ON and OFF Bluetooth, and short press the SET button to confirm the setting.

After exiting, the screen will show the Bluetooth status.

OFF: Turn off Bluetooth and the Bluetooth status logo will disappear.

ON: Turn on Bluetooth, and the Bluetooth status logo will appear.

3.2 Fan Mode: Rotate the SET button to select the fan gear mode H/M/OFF, short press the SET button to confirm the setting, and the screen

The fan status will be displayed.

H high speed gear: 100% high brightness and full power operation (laboratory test noise is about 26dB).

M soft mode: maximum brightness 50%, reduces wind noise, and makes the light brightness softer (laboratory test noise 15dB).

OFF Turn off the fan: Maximum brightness 10%, noise is almost zero.

4. Connect to mobile APP

4.1 Before using the APP, turn on the Bluetooth of the video light, press and hold the SET button to enter the menu page, and select Bluetooth switch.

Turn on (ON).

4.2 Scan the QR code to download the "SIRUI Light" mobile APP.

4.3 Turn on Bluetooth on your phone, connect the corresponding light in the "SIRUI Light" APP and control it through the APP.

For specific operations, please refer to the mobile APP instructions.

5. Installation and fixing

The lamp body can be fixed on the quick-release plate through the 1/4 screw hole and positioning pin at the bottom of the lamp body.

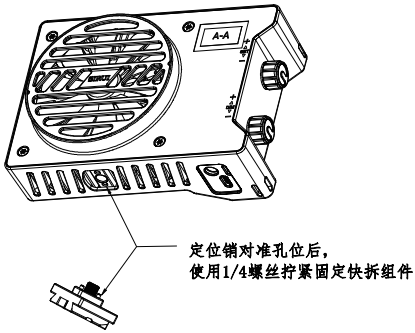

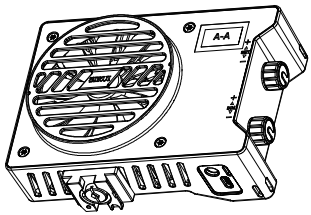

After installing the quick release plate,

It can be installed quickly.

It can be uninstalled quickly.

(1) Hold the light body with your right hand, press the unlock button of the tilt pan/tilt head with your left hand and move the handle backwards.

(2) Hold the light body with your right hand, press the unlock button of the tilt pan/tilt head with your left hand and move the handle forward at the same ti

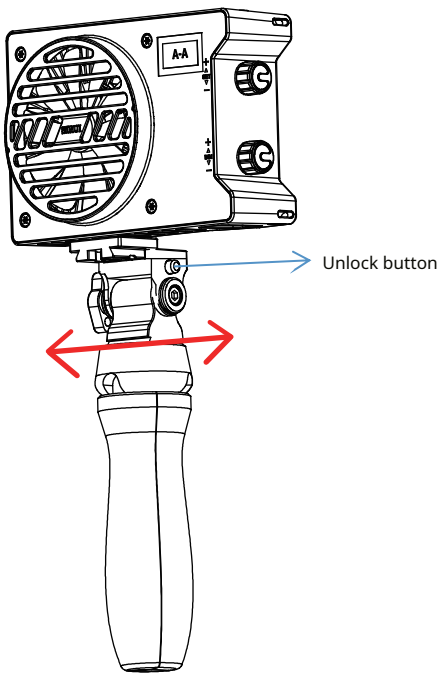

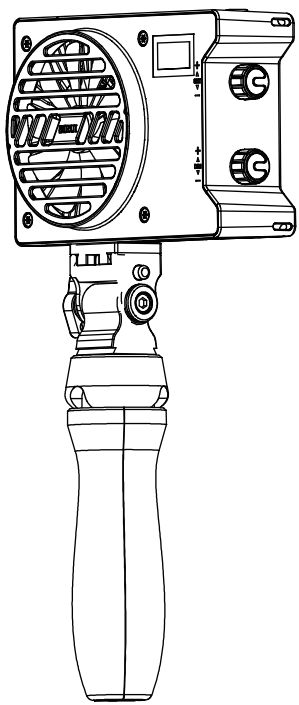

There is a 1/4 screw hole on the bottom of the tilt head, which can be connected to the handle for use.

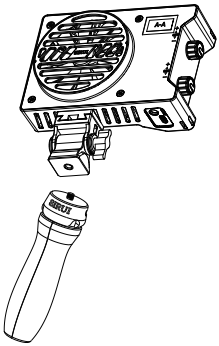

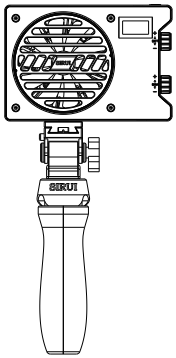

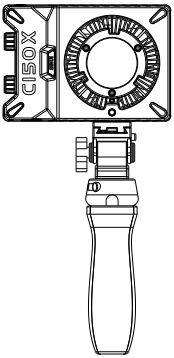

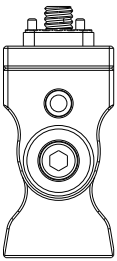

Tip: After using the pan/tilt head for a period of time,

If the tightening force is not enough, you can use a hexagonal wrench to tighten the screw

There is a 1/4 screw hole on the bottom of the tilt head, which can be connected to a light stand.

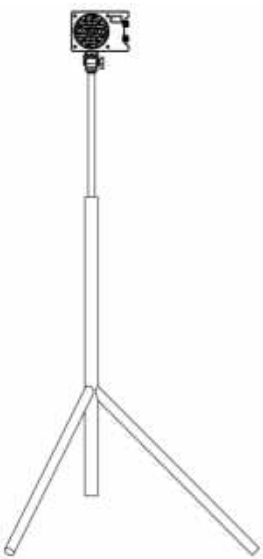

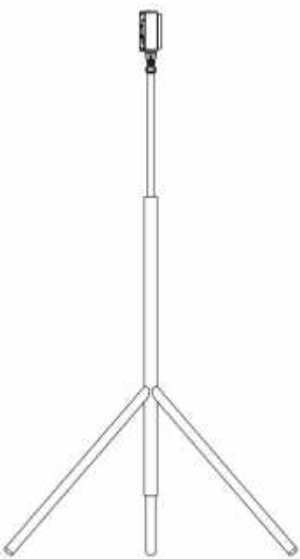

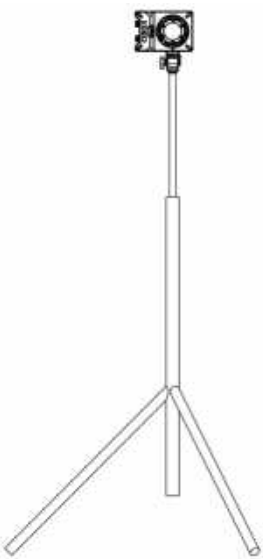

6. Installing and removing the lamp cover

Align the bayonet of the lamp cover with the accessory bayonet of the fill light, then install the lamp cover on the fill light and rotate the light clockwise.

Cover until you hear a "click" sound, the lamp cover buckle is automatically locked, and the installation is complete.

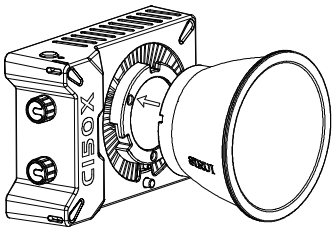

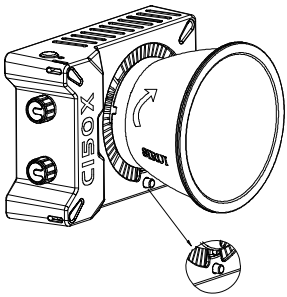

Press and hold the accessory unlock button, turn the lamp cover inward by hand, and then remove the lamp cover from the accessory bayonet.

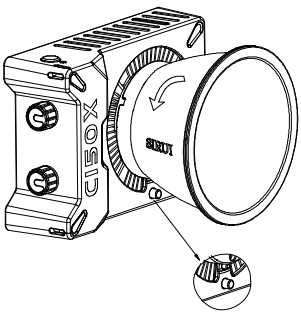

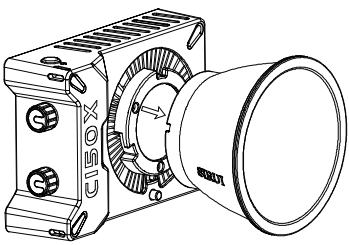

7. Install the adapter ring and standard lampshade

(1) Align the bottom of the adapter ring with the bracket, insert it into position, and tighten the knob.

(2) Align the standard cover’s bayonet with the adapter ring’s bayonet, and rotate the standard cover clockwise until you hear a “click” sound.

The installation is complete when the adapter is locked with the bayonet.

(3) Align the lamp body’s bayonet with the adapter ring’s bayonet, and rotate the lamp body counterclockwise until the lamp body is stuck in the adapter ring and cannot be turned.

Move, lock automatically, and the installation is complete.

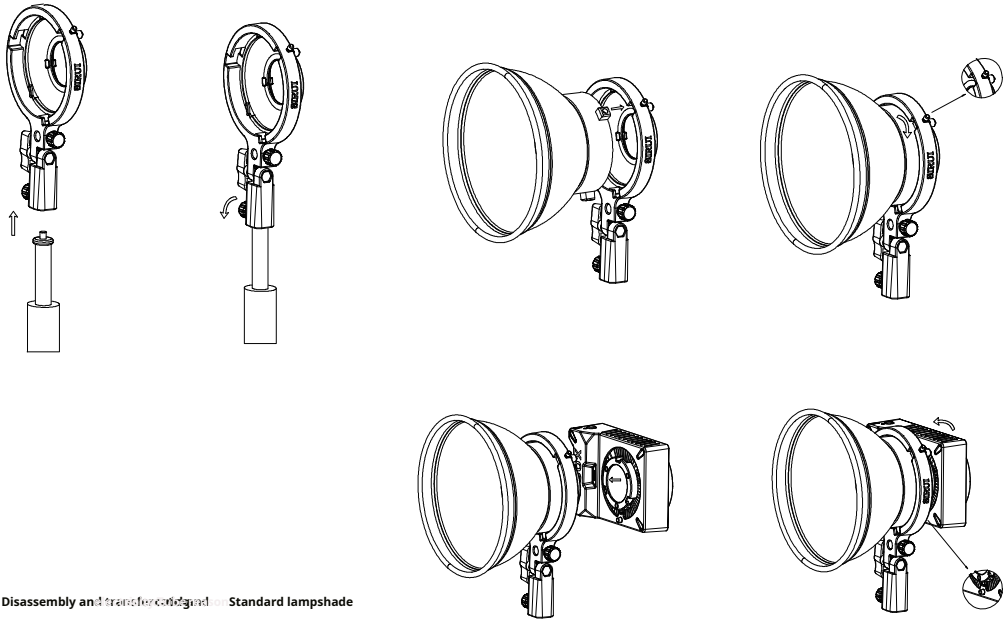

8. Disassembly and transfer of standard lampshade

(1) Press the locking buckle of the adapter ring and rotate the standard cover counterclockwise to remove the standard cover from the adapter ring.

(2) Press and hold the accessory unlock button on the lamp body, turn the lamp body counterclockwise, and remove the lamp body from the adapter ring.

(3) Loosen the locking knob of the adapter ring and remove the adapter ring from the light stand to complete the disassembly.

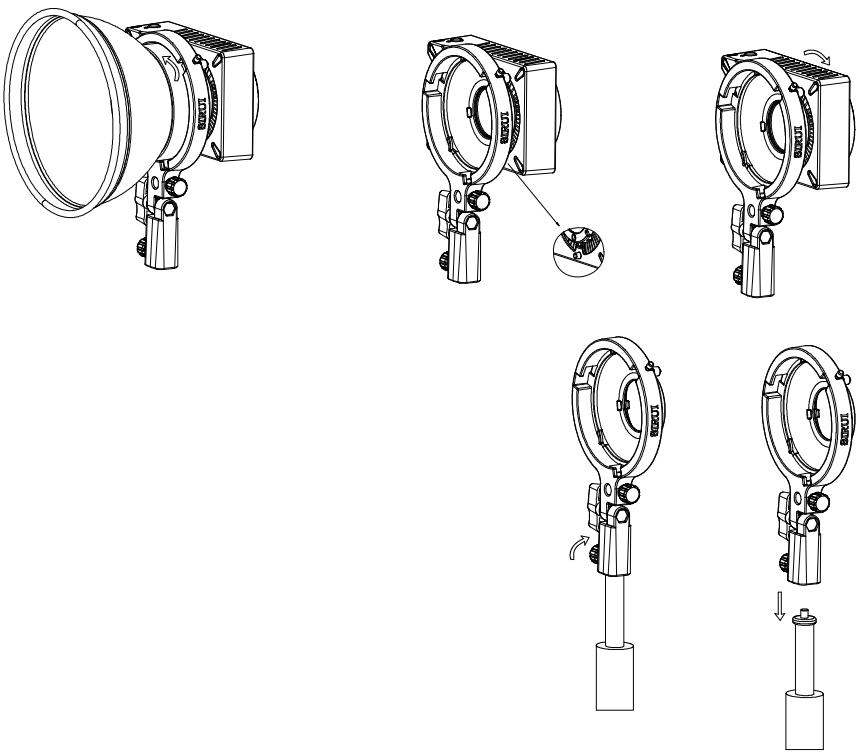

Product Parameters

model	C150X
Product size (excluding lampshade)	140*97*53mm
Product weight (excluding lampshade)	About 458g
Dedicated adapter	Input 100-240V, 28V 6.4A adapter
Power supply interface	DC, Type C
Rated Power	170W
Color temperature range	2700K~6500K
Special Effects Mode	12 categories
TLCI	≥97
CRI	≥96
Dimming range	0%-100%
Operating temperature	- 10℃-45℃
Control method	Panel control/mobile phone APP
Bluetooth wireless control distance	15m

Design and specifications subject to change without notice.

Brightness test data

距离	屏幕色温	2700	3200	4500	5600	6500
0.5m（裸灯）	裸灯	18300	18800	20400	20800	21200
	带反光杯	90300	93500	102000	104000	107000
1m（裸灯）	裸灯	4590	4730	5120	5210	5310
	带反光杯	20300	21100	22900	23500	24000
2m（裸灯）	裸灯	1190	1230	1330	1350	1380
	带反光杯	4870	5030	5470	5580	5700
3m（裸灯）	裸灯	564	582	631	641	652
	带反光杯	2210	2290	2490	2530	2600

The above data are average data measured in the laboratory. The brightness, color temperature and other parameters of different lamps may vary slightly.

warn

1. This product is not waterproof. Please pay attention to waterproofing in rainy days and humid environments.

2. Please keep it dry. Do not touch the product with wet hands, immerse the product in water or expose it to rain.

3. Do not use the light near chemicals, flammable gases or other special substances, as this may cause fire or electromagnetic interference. In these cases, please pay attention to the relevant warning signs.

4. When using this product, it is strictly forbidden to touch the heating parts to avoid burns.

5. Do not use foreign objects or block the fan to avoid affecting the fan function of the product.

6. It is strictly forbidden to point the light beads of this product directly at the human eyes to avoid causing vision damage.

7. The ambient operating temperature of the lamp body is between -10°C and 40°C.

8. When powered on, do not place the lamp body and adapter near flammable objects (such as fabrics and wooden products).

To prevent accidents After use, please disconnect the light body and adapter in time.

9. Do not place or use this product in a high temperature environment exceeding 40°C.

10. After use, turn off the lamp and wait for it to cool down before storing it.

11. It is prohibited to add unofficial accessories in front of the reflector, such as silicone diffuser, diffuser cloth cover, etc.

Precautions

1. Store in a cool, dry and well ventilated place.

2. Keep away from or put in fire.

3. Do not look directly at the lamp beads for a long time when the lamp is on.

4. Avoid placing the lamp near flammable and volatile solvents.

5. Avoid using in humid, dusty or overheated environment.

6. Do not place the lamp in a place with high temperature or high humidity.

7. Do not touch the product with wet hands, immerse the product in water or expose it to rain.

8. The battery has a certain life limit. After a certain period of use, its performance will weaken, which is normal.

Maintenance and care

1. This product has a one-year warranty.

2. If it is discovered that the lamp has been repaired without authorization, the one-year warranty period will be cancelled and relevant repair fees will be charged.

3. If the product fails or is wetted by water, it can only be used after being repaired by a professional.

4. It is normal for the lamp body to be slightly hot.

5. Repairs are the responsibility of our factory's maintenance department.

6. The lamp body should be protected from vibration and the surface should be dusted regularly.

7. If any abnormality is found when the lamp is working, turn off the power immediately and find out the cause.

8. Design and specifications are subject to change without prior notice.

This device complies with Part 15 of the FCC Rules. Operation is subject to the following two conditions: (1) this device may not cause harmful interference, and (2) this device must accept any interference received, including interference that may cause undesired operation

NOTE: This equipment has been tested and found to comply with the limits for a Class B digital device, pursuant to Part 15 of the FCC Rules. These limits are designed to provide reasonable protection against harmful interference in a residential installation. This equipment generates, uses and can radiate radio frequency energy and, if not installed and used in accordance with the instructions, may cause harmful interference to radio communications. However, there is no guarantee that interference will not occur in a particular installation.
If this equipment does cause harmful interference to radio or television reception, which can be determined by turning the equipment off and on, the user is encouraged to try to correct the interference by one or more of the following measures:
-- Reorient or relocate the receiving antenna.
-- Increase the separation between the equipment and receiver.
-- Connect the equipment into an outlet on a circuit different from that to which the receiver is connected.
-- Consult the dealer or an experienced radio/TV technician for help.

Warning: changes or modifications not expressly approved by the party responsible for compliance could void the user's authority to operate the equipment

The devices has been evaluated to meet general RF exposure requirement， the device can be used in portable exposure condition without restriction