Countertop Bevi

Installation Guide

Countertop Machine V1.0

780-0005 REV05

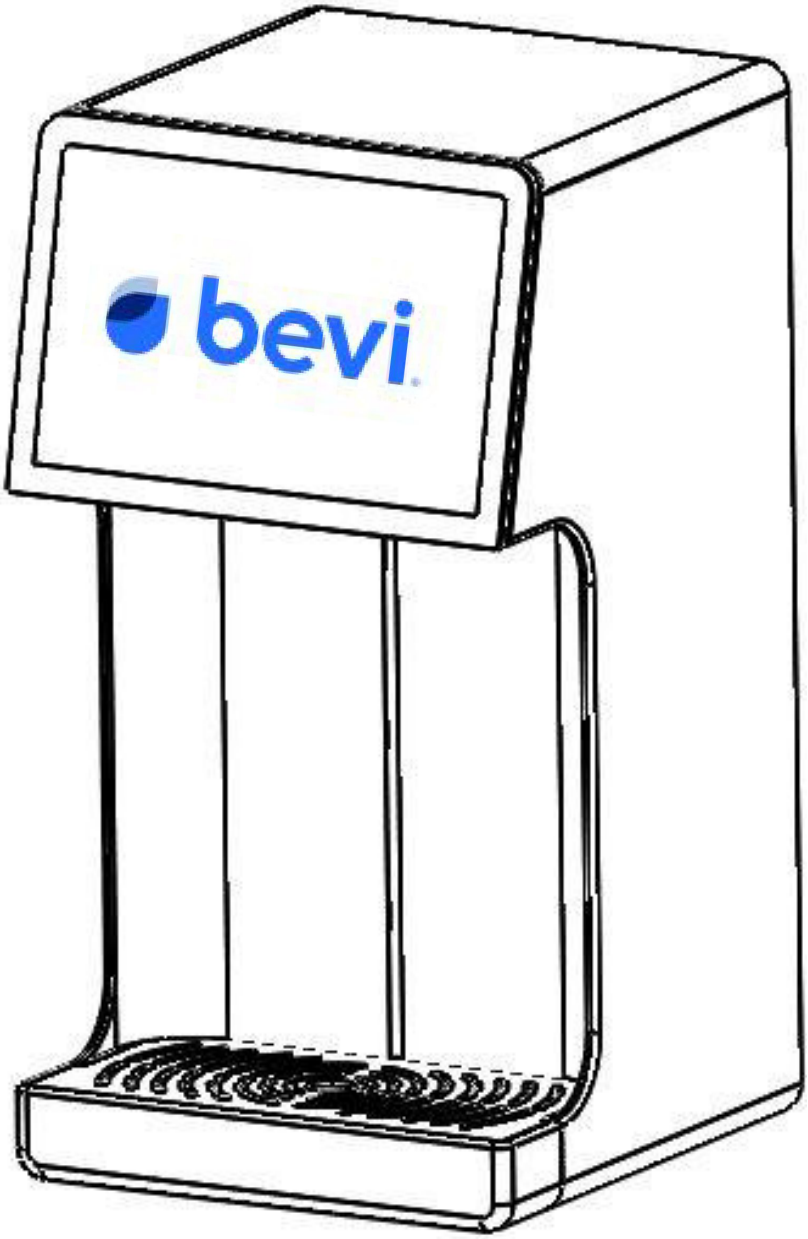

2020 Bevi. All Rights Reserved

support@bevi.co – (866)-704-2384

SAFETY NOTICE

- **CAUTION:** No user servicing/serviceable parts.
- This appliance must be properly installed on a GFCI protected circuit.
- Maximum water inlet supply pressure: 87PSI (0.9 MPa).
- This appliance is not intended for use by persons (including children) with reduced physical, sensory or mental capabilities, or lack of experience and knowledge, unless they have been given supervision or instruction concerning use of the appliance by a person responsible for their safety.
- Children should be supervised to ensure that they do not play with the appliance.
- Appliance is only to be installed in locations where it can be overseen by trained personnel.
- The appliance must not be cleaned by a water jet.
- For indoor use only. 10-32°C (50-90°F).
- Appliance shall not be installed in an area where a water jet could be used.
- Do not store explosive substances such as aerosol cans with a flammable propellant near the appliance.
- This appliance is climatic class 0: 20°C (68°F), 50% RH, 9.3°C dew point, 7.3 g/kg water vapor mass in dry air.
- Water pipe connections and fixtures directly connected to a potable water supply shall be sized, installed, and maintained in accordance with federal, state, and local codes.
- Product package is single use and must be discarded and product not reused upon removal from the equipment.

2020 Bevi. All Rights Reserved
support@bevi.co – (866)-704-2384

Introduction & Table of Contents

In this document you will find a step-by-step guide to install the Bevi Countertop Unit. The areas covered are as follows:

Page 4: Video Links and Compliance Statement
Page 5: Pre-Installation Requirements
Page 6: Tubing Drill Hole Template
Page 7: Cabinet Layout
Page 12: Installation Don'ts
Page 13: Water Filter Setup
Page 14: Filter Head Mounting Hole Template
Page 15: Chiller/Carbonator Setup
Page 18: Suggested Recirculation Line Routing
Page 19: Power Strip Setup
Page 20: Power Strip Mounting Hole Template
Page 21: Console and Flavor Setup
Page 23: Connecting Console to Chiller/Carbonator
Page 24: Connecting Console to Power Strip
Page 25: Connecting Power Strip to Outlet via Grommet
Page 26: CO_2 Tank Setup
Page 27: CO_2 Tank Brackets Mounting Hole Template
Page 28: Insulating the Recirculation Lines
Page 29: Filling the Ice Bank
Page 30: Installing the Backflow Preventer
Page 31: Service Panel Startup
Page 32: Internet Connection Setup
Page 33: Flavors, CO_2, & Filter Selection
Page 34: Sparkling Flow Rate Calculation
Page 35: Touchscreen ID & Incubation Setup
Page 36: Technical Support Information

2020 Bevi. All Rights Reserved
support@bevi.co – (866)-704-2384

Video Links and Compliance Statement

In addition, you can watch the entire installation video online, or view specific stages from the links below:

Full Installation Video — bit.ly/ctinstallation
Requirements — bit.ly/ctrequirements
Filter Setup — bit.ly/ctfilter
Chiller/Carbonator Setup — bit.ly/ctcarbonator
Power Strip Setup — bit.ly/ctpowersetup
Console and Flavor Setup — bit.ly/ctconsole
CO_2 Tank Setup — bit.ly/ctco2tank
Software Setup — bit.ly/ctsoftware

Changes or modifications not expressly approved by Bevi could void the user's authority to operate the equipment.

This device complies with Part 15 of the FCC Rules. Operation is subject to the following two conditions: (1) this device may not cause harmful interference, and (2) this device must accept any interference received, including interference that may cause undesired operation

This equipment has been tested and found to comply with the limits for a Class A digital device, pursuant to Part 15 of the FCC Rules. These limits are designed to provide reasonable protection against harmful interference when the equipment is operated in a commercial environment. This equipment generates, uses and can radiate radio frequency energy and, if not installed and used in accordance with the instruction manual, may cause harmful interference to radio communications. Operation of this equipment in a residential area is likely to cause harmful interference in which case the user will be required to correct the interference at his own expense.

This device contains license-exempt transmitter(s)/receiver(s) that comply with Innovation, Science and Economic Development Canada's license-exempt RSS(s). Operation is subject to the following two conditions: (1) this device may not cause interference, and (2) this device must accept any interference, including interference that may cause undesired operation of the device.

Cet appareil contient des émetteurs/récepteurs exempts de licence qui sont conformes aux RSS sans licence d'Innovation, Sciences et Développement économique Canada. L'exploitation est autorisée aux deux conditions suivantes : (1) l'appareil ne doit pas produire de brouillage, et (2) l'appareil doit accepter tout brouillage radioélectrique subi, même si le brouillage est susceptible d'en compromettre le fonctionnement.

This equipment complies with FCC and ISED radiation exposure limits set forth for an uncontrolled environment. This equipment should be installed and operated with a minimum distance of 20cm between the radiator and your body. This transmitter must not be co-located or operating in conjunction with any other antenna or transmitter.

2020 Bevi. All Rights Reserved
support@bevi.co – (866)-704-2384

Pre-Installation Requirements

Or you can watch it here!
bit.ly/ctrequirements

Water source

- Dedicated 3/8” plumbing line, rated for minimum of 145 psi
- Minimum supply pressure of 50 psi & 5 liters per minute flowrate

Note: After measuring static water pressure, dispense 1 L of water from the fully opened water valve and time how long it takes to fill. A completion time of 10 seconds or less should indicate sufficient pressure.

Power source

- 110-120V AC Outlet

Internet Access

- Wi-Fi (2.4-GHz 802.11N Wireless Network)
- Bevi-approved Mobile Hotspot/Router (3G/4G Cellular Connection)
- Ethernet Connection (RJ-45)

CO2 Tank

- Either a 5 or 10 lb tank fits in the cabinet

Tools & Materials List	
10” Adjustable Wrench	4” Hole Saw
Power Drill (Corded) and Drill Bit Set	Paper Towels
Flat Head Screwdriver	Extra 3/8” Polyethylene Tubing (Black)
Utility Knife	Pitcher or Bucket with 1 L marking
Tube Cutter	Double-Sided Tape (Very High Bond)

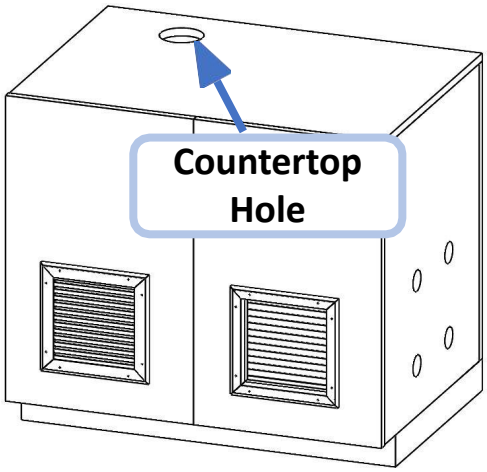

Venting Requirements

- 4” diameter hole in counter, directly over placement of chiller/carbonator.
- Center of hole must be more than 7” away from wall to allow heat to vent.
- See *Countertop Hole Template* on Page 6 for details
- See *Ventilation Guide* on Page 7 for details.

2020 Bevi. All Rights Reserved

Tubing Drill Hole Template

A minimum of 5” distance is required between the back wall and the edge of the drilled hole, or 7” to the center of the drilled hole.

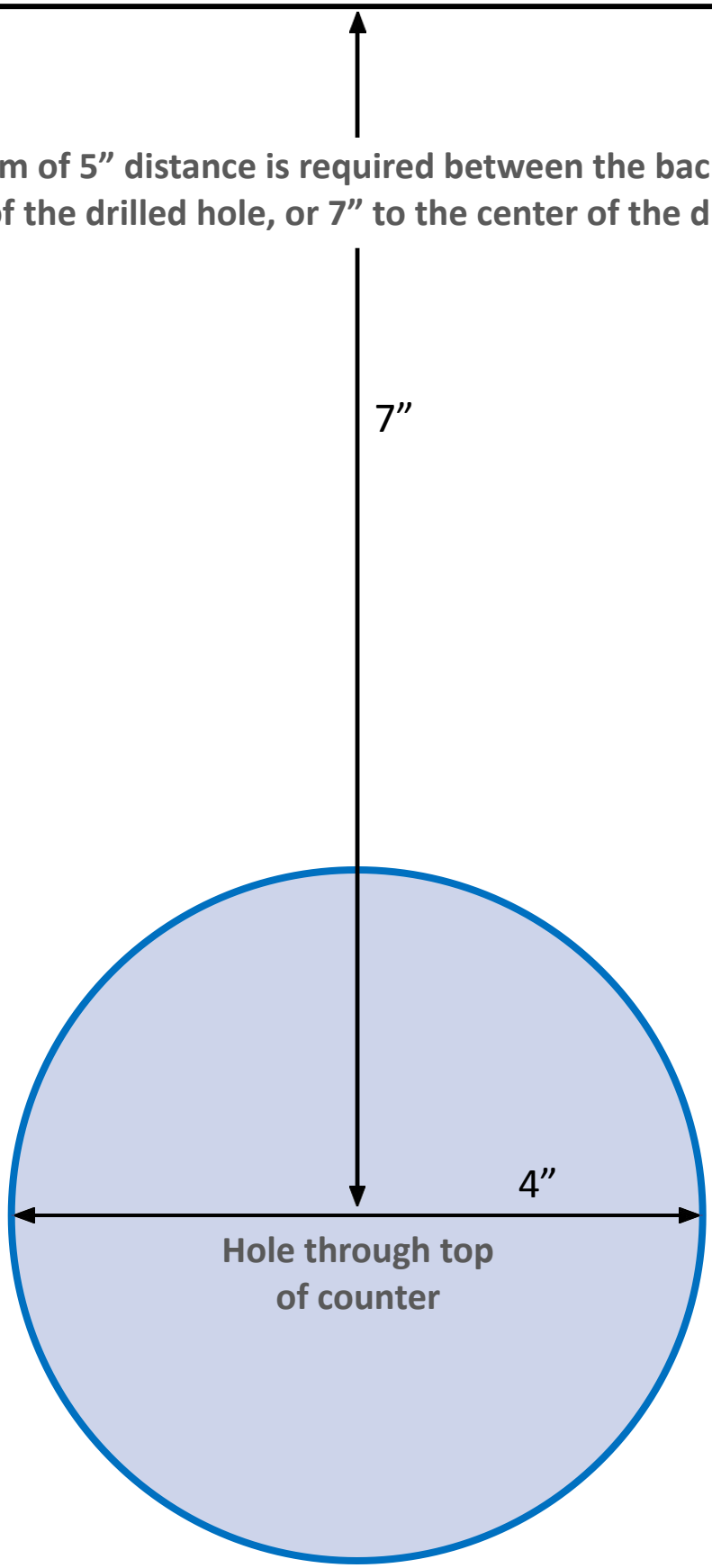

2020 Bevi. All Rights Reserved
support@bevi.co – (866)-704-2384

Want to easily walk through this decision? Scan here

Cabinet Layout

How many cabinets do you have available?
Note: you can use the under sink as a cabinet if you:
Clear the space of any cleaning agents
Place BIBs on a tray or shelf

2 (Ideal)
Great! It ensures that the flavor BIBs are far enough away from the heat generating carbonator, ultimately protecting the flavors from any type of degradation. See below.

1 (see page 8)

Two-Cabinet Layout Options

Layout option #1: If you have more than 24" width in a cabinet

Cabinet A Components	Cabinet A Dimensions	Cabinet A Ventilation*
Carbonator + Co2 Tank	**Minimum** 24" in width 24" in depth 28" in height	**Minimum** 15 in² *
Cabinet B Components	**Cabinet B Dimensions**	**Cabinet B Ventilation**
4 x BIBs	12" in width 24" in depth 28" in height	n/a *

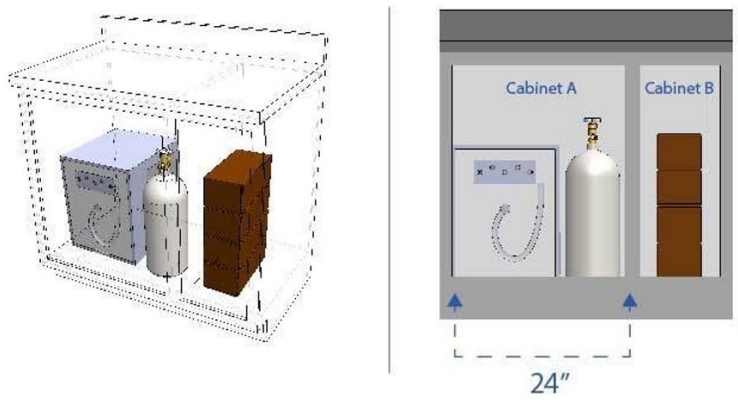

2020 Bevi. All Rights Reserved

Cabinet Layout

Layout option #2: If you have 18" - 24" width in a cabinet

Cabinet A Components	Cabinet A Dimensions	Cabinet A Ventilation*
Carbonator	**Minimum** 18" in width 24" in depth 28" in height	**Minimum** 12 in² *
Cabinet B Components	**Cabinet B Dimensions**	**Cabinet B Ventilation**
Co2 Tank + 4 x BIBs	**Minimum** 18" in width 24" in depth 28" in height	n/a *

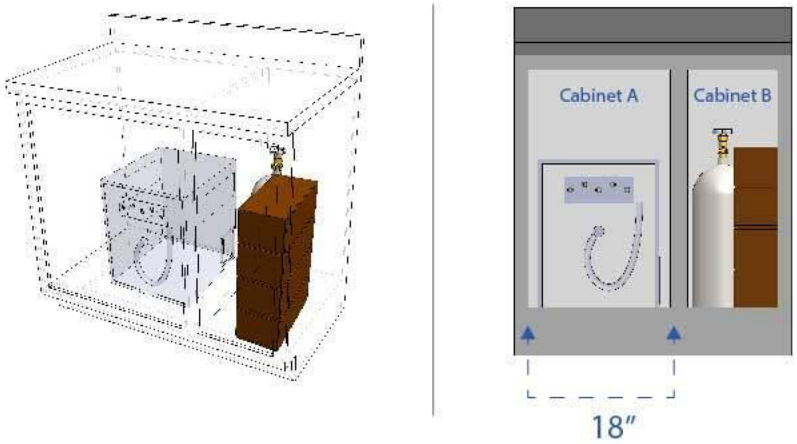

*Ventilation Guide for 2 cabinets

Tool	1.5" Hole Saw	1.75" Hole Saw	2" Hole Saw	2.5" Hole Saw	Sawzall
Ventilation Geometry (15 in²)	9 holes	7 holes	5 holes	3 holes	1" x 15" rectangle
Ventilation Geometry (12 in²)	7 holes	5 holes	4 holes	3 holes	1" x 12" rectangle

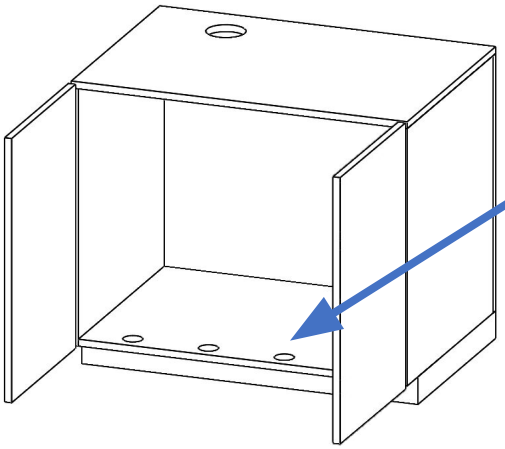

Toe Kick Ventilation

Drill into the overhang that typically protrudes at the base of a cabinet, or 'toe kick'.

2020 Bevi. All Rights Reserved
support@bevi.co – (866)-704-2384

Cabinet Layout: Single Cabinet

Is the cabinet at least 34”?

Yes
Great! A single cabinet configuration is the least desirable for ventilation, but if no other option is available, follow the configurations shown below.
Follow one of the install layouts below to ensure safety of all components.

No
Unfortunately, the cabinet configuration does not meet Bevi’s requirements. Please consult Support to discuss alternatives at 1-866-704-2384.

Layout #3: Single Cabinet, 34”+, chiller venting out front

Note: Stack the flavor BIBs only two boxes high right next to one another with the spout at the front or side (not facing upwards
Ensure that they are closer to the front of the cabinet so that they are close to the ventilation holes

Cabinet A Components	Cabinet A Dimensions	Cabinet A Ventilation**
Carbonator + Co2 Tank + 4 x BIBs	**Minimum** 34” in width 24” in depth 28” in height	**Minimum** 25 in² **

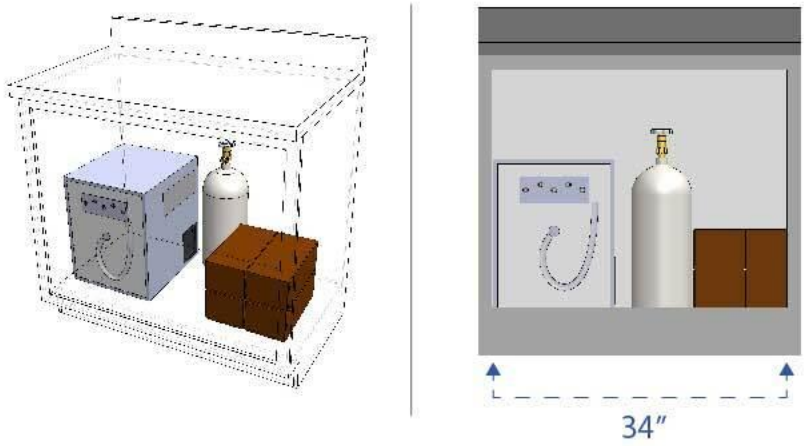

2020 Bevi. All Rights Reserved
support@bevi.co – (866)-704-2384

Cabinet Layout: Single Cabinet

Layout #4: Single Cabinet, 34”+, chiller venting sideways (not to wall)

Cabinet A Components	Cabinet A Dimensions	Cabinet A Ventilation**	
Carbonator + Co2 Tank + 4 x BIBs	**Minimum** 34” in width 24” in depth 28” in height	**Minimum** 25 in² **	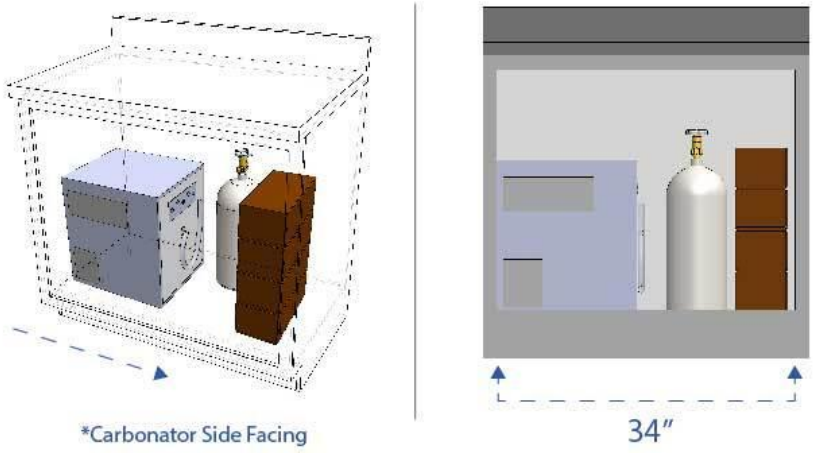

Layout #5: Single Cabinet, 34”+, chiller venting out front, 4 stacked BIBs

If BIBs are stacked 4 high, in addition to the toeboard ventilation, two door vents also need to be installed on the cabinet

Cabinet A Components	Cabinet A Dimensions	Cabinet A Ventilation**	
Carbonator + Co2 Tank + 4 x BIBs	**Minimum** 34” in width 24” in depth 28” in height	**Minimum** 25 in² (toeboard) + 2 door vents (110 in²) **	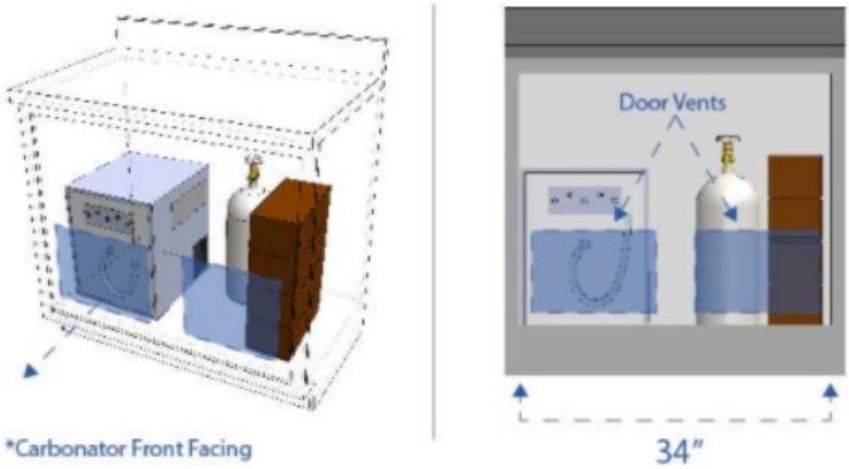

2020 Bevi. All Rights Reserved
support@bevi.co – (866)-704-2384

Cabinet Layout: Single Cabinet

**Ventilation Guide for 1 cabinet

Tool	1.5” Hole Saw	1.75” Hole Saw	2” Hole Saw	2.5” Hole Saw	Sawzall
Ventilation Geometry (25 in²)	15 holes	11 holes	8 holes	5 holes	1” x 25” rectangle 1” x 12.5” rectangle (x2)

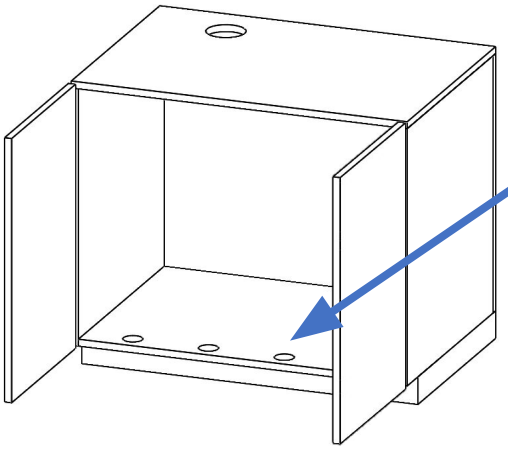

Toe Kick Ventilation

Drill into the overhang that typically protrudes at the base of a cabinet, or ‘toe kick’.

2020 Bevi. All Rights Reserved

support@bevi.co – (866)-704-2384

Installation Don’ts

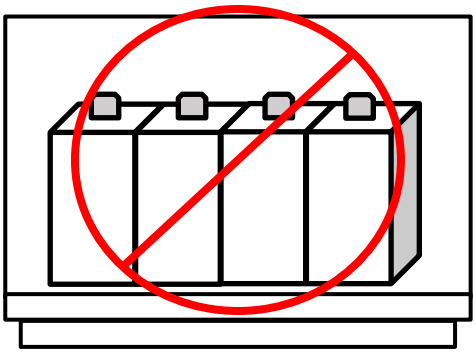

DO NOT STAND BIBS UP WITH SPOUTS ON TOP

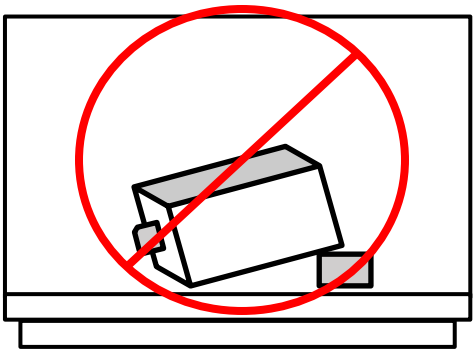

DO NOT PROP BIBS UP ON OTHER ITEMS IN CABINET

DO NOT PLACE OTHER ITEMS IN CABINET (E.G. CLEANING SUPPLIES, FOOD, ETC.)

DO NOT COVER VENTILATION HOLES

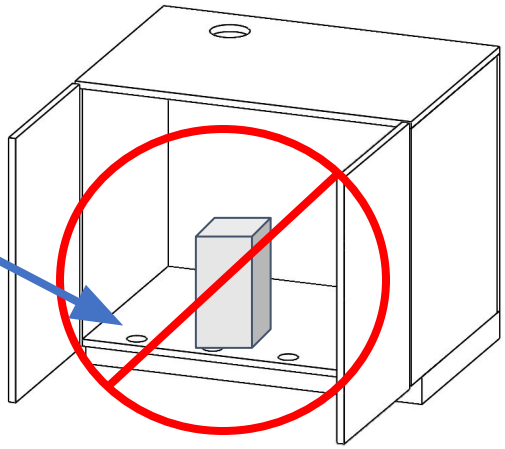

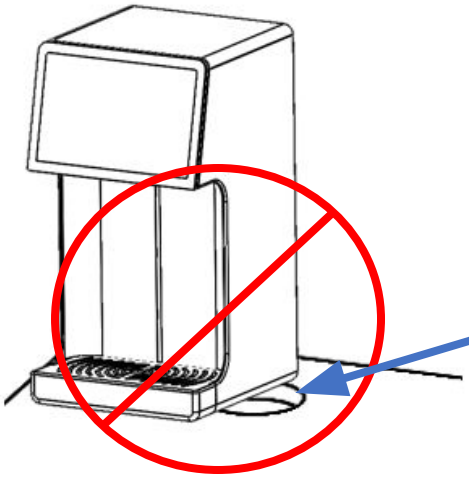

DO NOT PLACE THE HEAD UNIT ONLY PARTIALLY OVER THE COUNTERTOP HOLE

DO NOT PLACE POWER STRIP OR OPTCONNECT ON TOP OF CARBONATOR

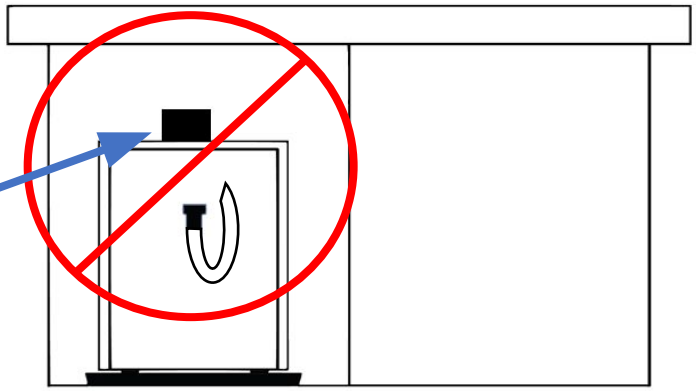

2020 Bevi. All Rights Reserved

Step 1: Water Filter Setup

Or you can watch it here!
bit.ly/ctfilter

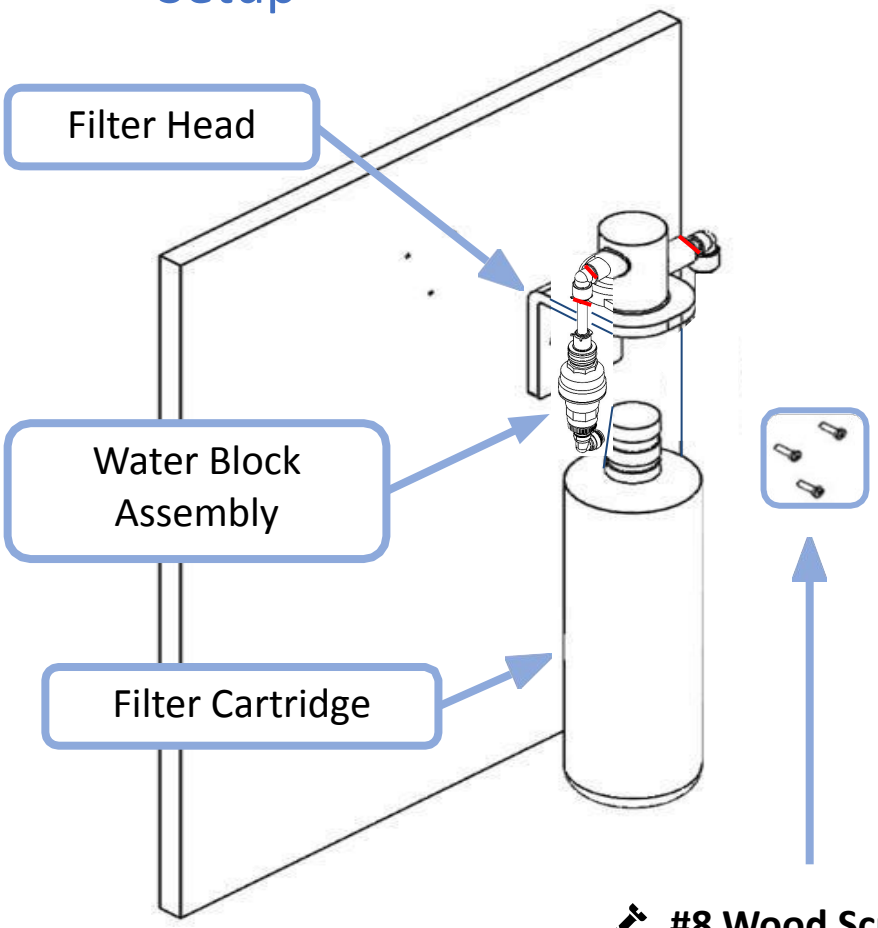

Screws and locking clips located in **"Hardware"** bag in Box 1 of 3

Filter should be installed under sink, next to water source

Drill screw holes according to Filter Housing Hole Template, Page 14.

#8 Wood Screws

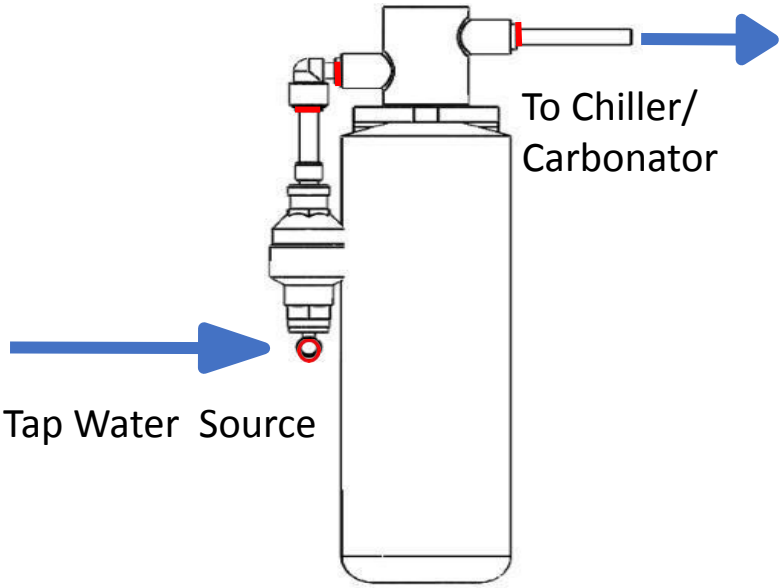

Ensure there is a water shutoff valve installed by the tap water source in case of emergency. **Show shutoff valve locations to customer before finishing installation.**

2020 Bevi. All Rights Reserved
support@bevi.co – (866)-704-2384

Filter Head

Mounting Hole Template

Step 1: Cut out and tape template to desired installation location. Make sure you have enough clearance for the filter to be mounted correctly.

Step 2: Drill 1/8” pilot holes in each of the marked locations.

Step 3: Install Filter Head using #8 wood screws.

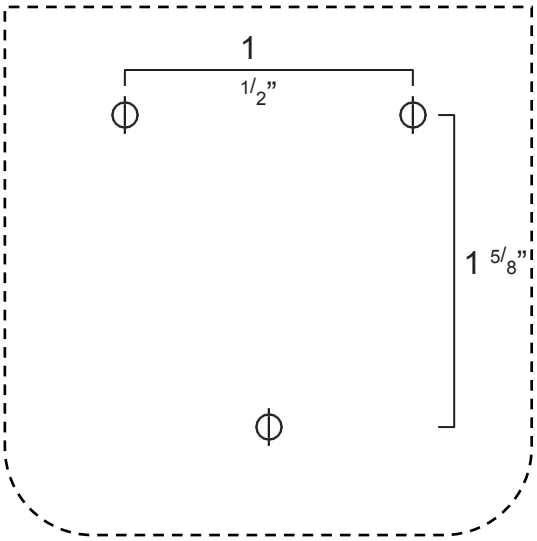

2020 Bevi. All Rights Reserved
support@bevi.co – (866)-704-2384

Step 2: Chiller/Carbonator Setup

Or you can watch it here!
bit.ly/ctcarbonator

Chiller/Carbonator device located in Box 3 of 3

Attach fittings with locking clip as illustrated below

Components for this step located in **"Carbonator"** connectors bag within **"Valves and Connectors"** bag located in Box 1 of 3

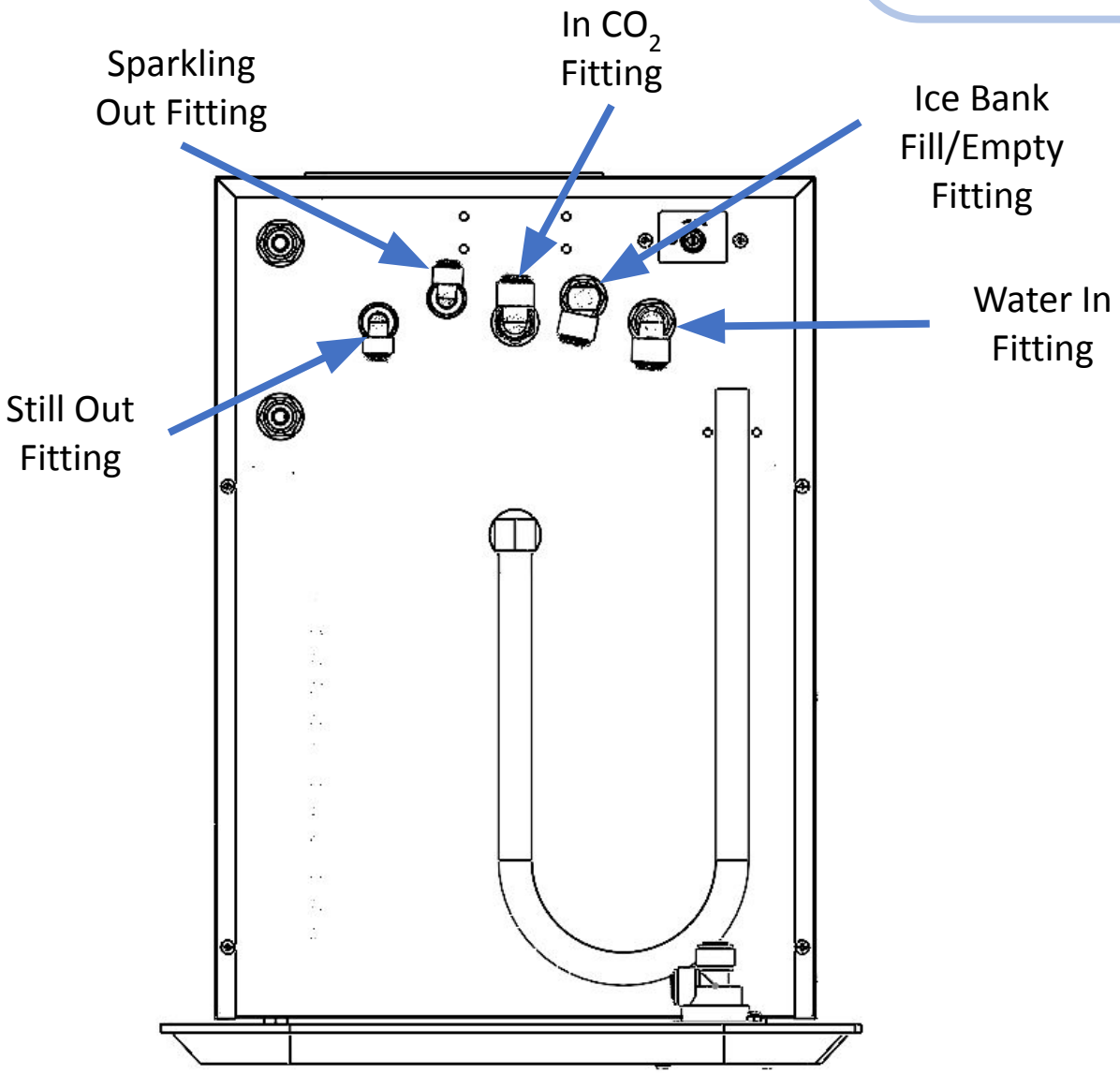

2020 Bevi. All Rights Reserved

Step 2: Chiller/Carbonator Setup

Or you can watch it here!
bit.ly/ctcarbonator

Attach components using locking clips from **"Hardware"** bag

Components for this step located in **"Valves and Connectors"** bag and power cord from the **"Power"** bag located in Box 1 of 3

NOTE: ARROWS INDICATE DIRECTION OF WATER IN FLOW COMPENSATOR

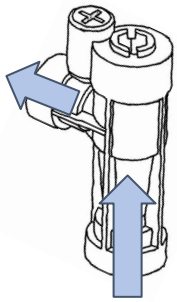

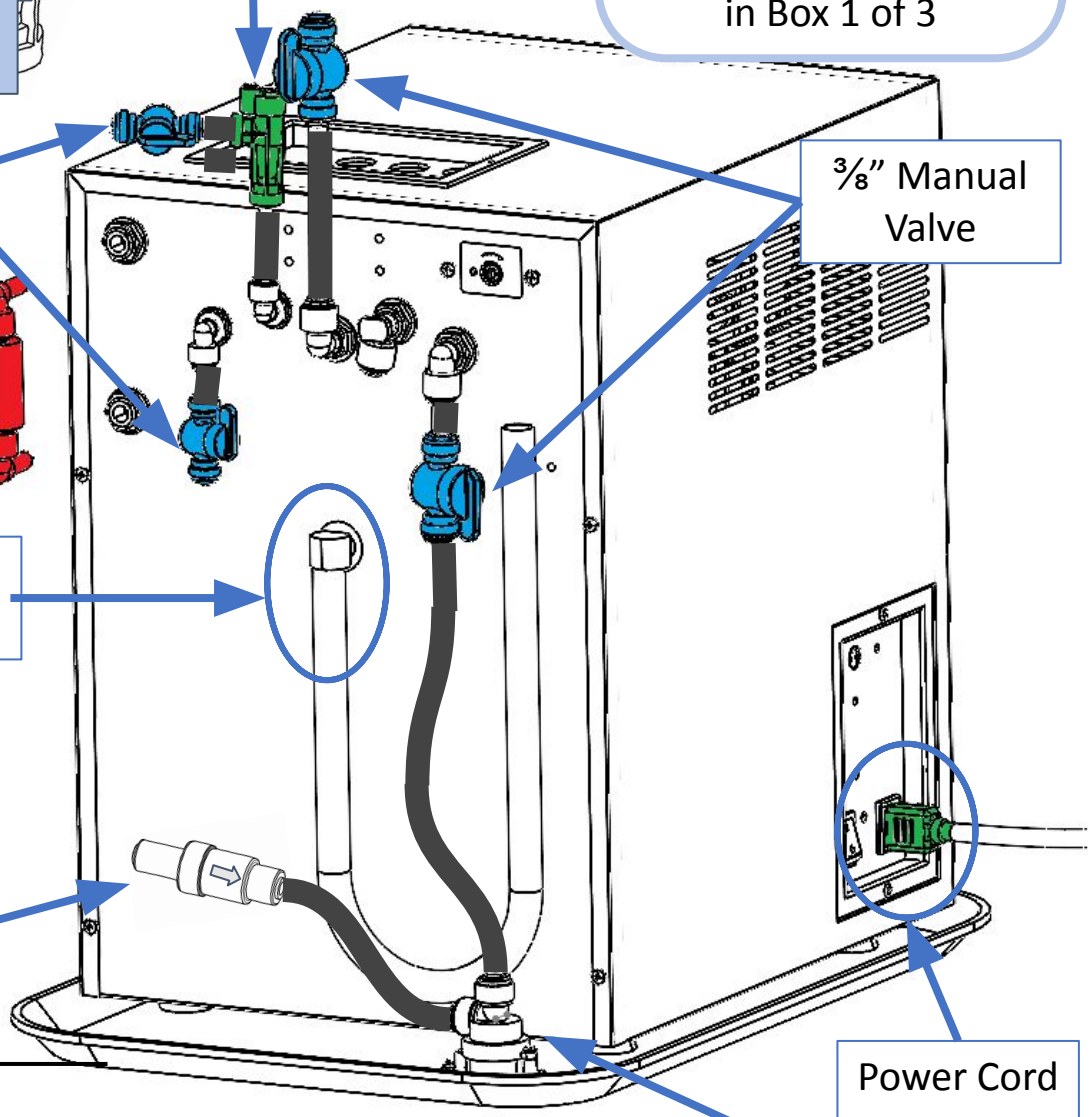

NOTE: ENSURE THAT ARROW ON PRESSURE REGULATOR IS IN THE SAME DIRECTION AS THE WATER FLOW

2020 Bevi. All Rights Reserved
support@bevi.co – (866)-704-2384

Step 2: Chiller/Carbonator Setup

Or you can watch it here!
bit.ly/ctcarbonator

Connect fittings using the ⅜" tubing cut to specified length

NOTE: Wrap exposed tubes and fittings from the recirculation line with foam insulation tape from "Console Mounting" bag to prevent condensation

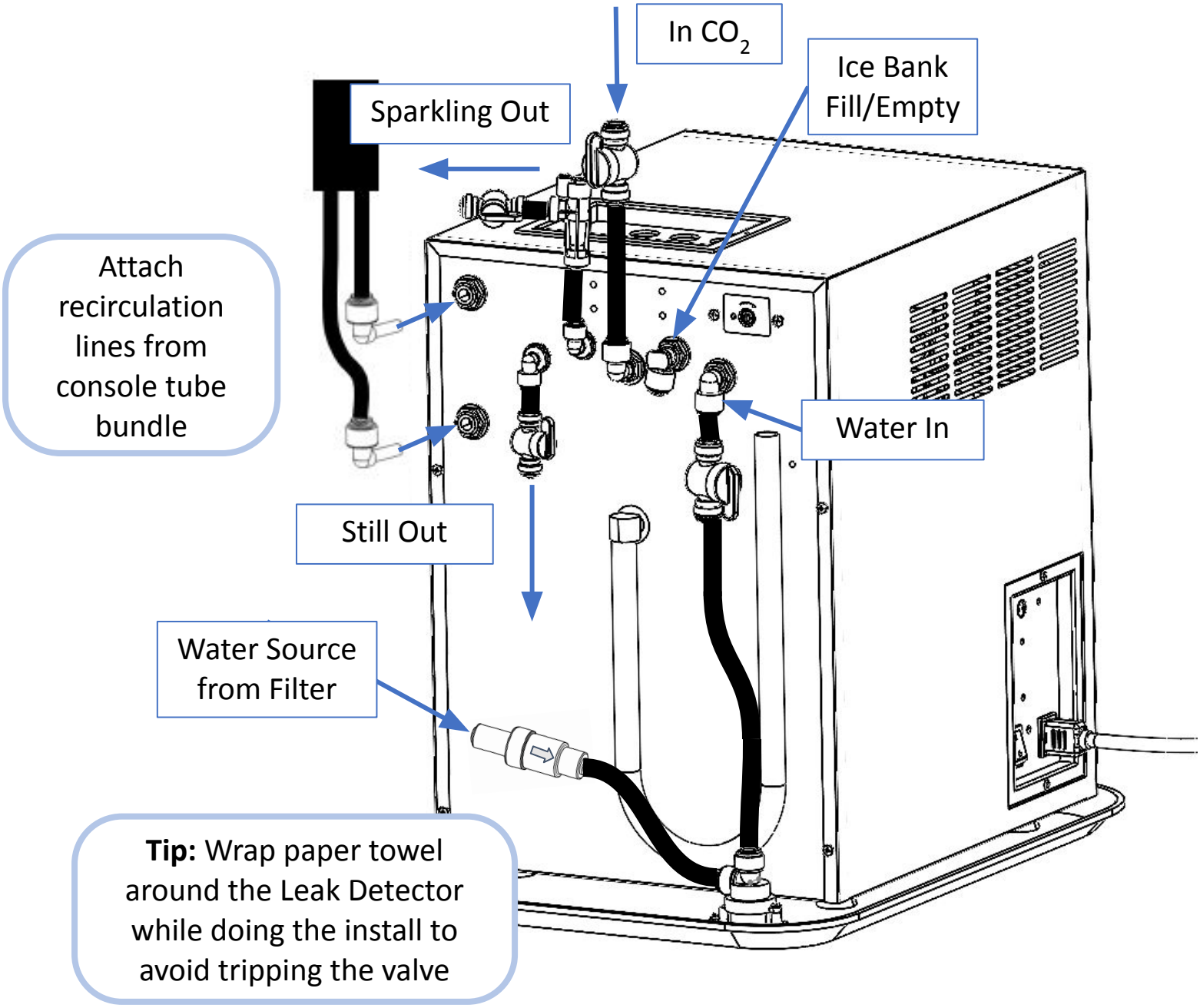

Front View

2020 Bevi. All Rights Reserved

Step 3: Suggested Recirculation Line Routing

NOTE: Avoid slopes and curves in the recirculation line, which allows water from condensation to pool in the line

1
Run recirculation line directly down from attachment point to carbonator

4
Route line straight up through countertop hole to console

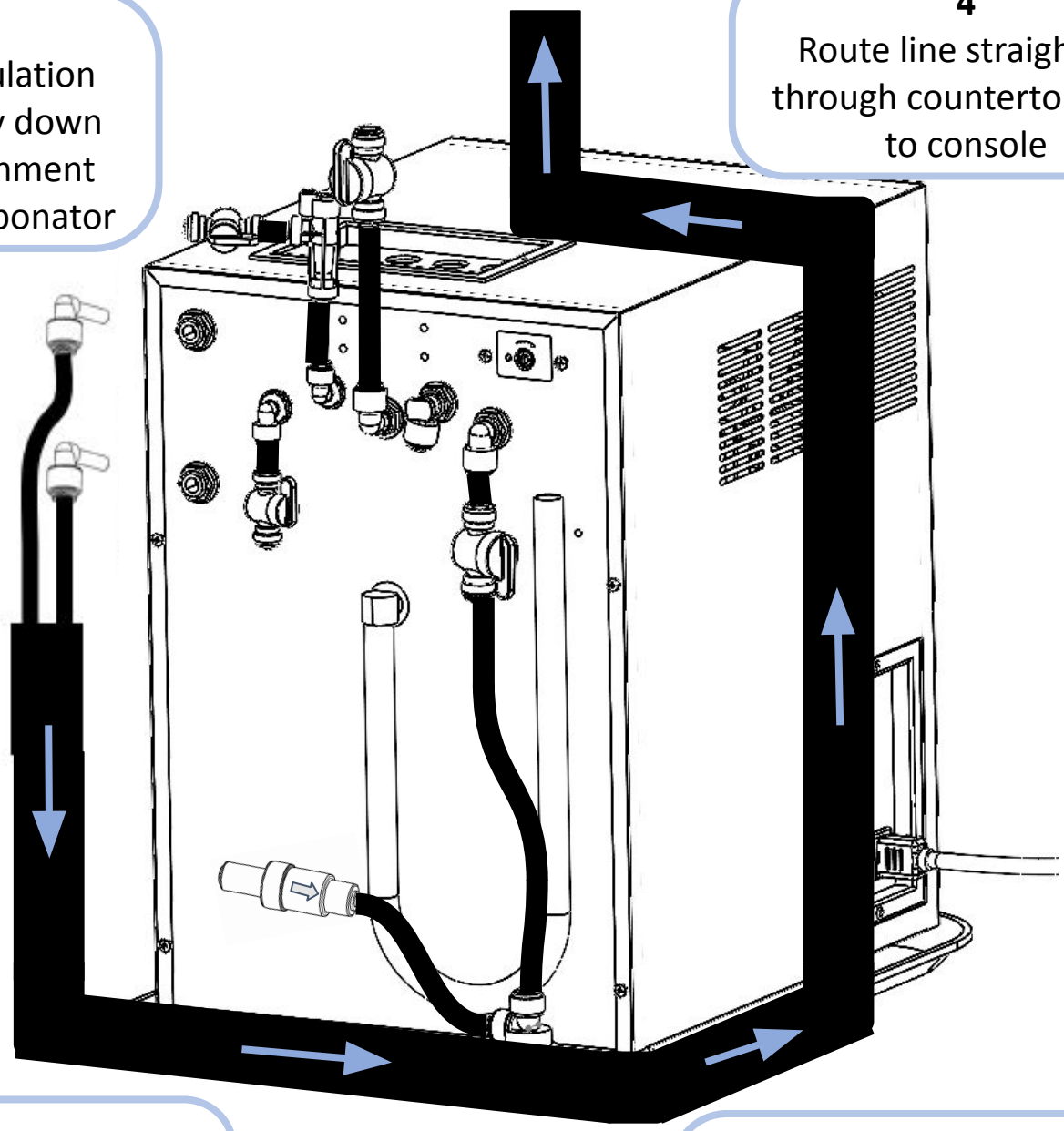

2
Use 90 degree turns when routing the line

3
If possible, use the carbonator tray as a channel to guide the line

2020 Bevi. All Rights Reserved
support@bevi.co – (866)-704-2384

Step 4: Power Strip Setup

Or you can watch it here!
bit.ly/ctpowersetup

Components located in **"Power"** and **"Hardware"** bag located in Box 1 of 3

Mounting Instructions:
Install via included *#4 wood screws*. Drill holes according to Power Strip Mounting Template, Page 20. x4

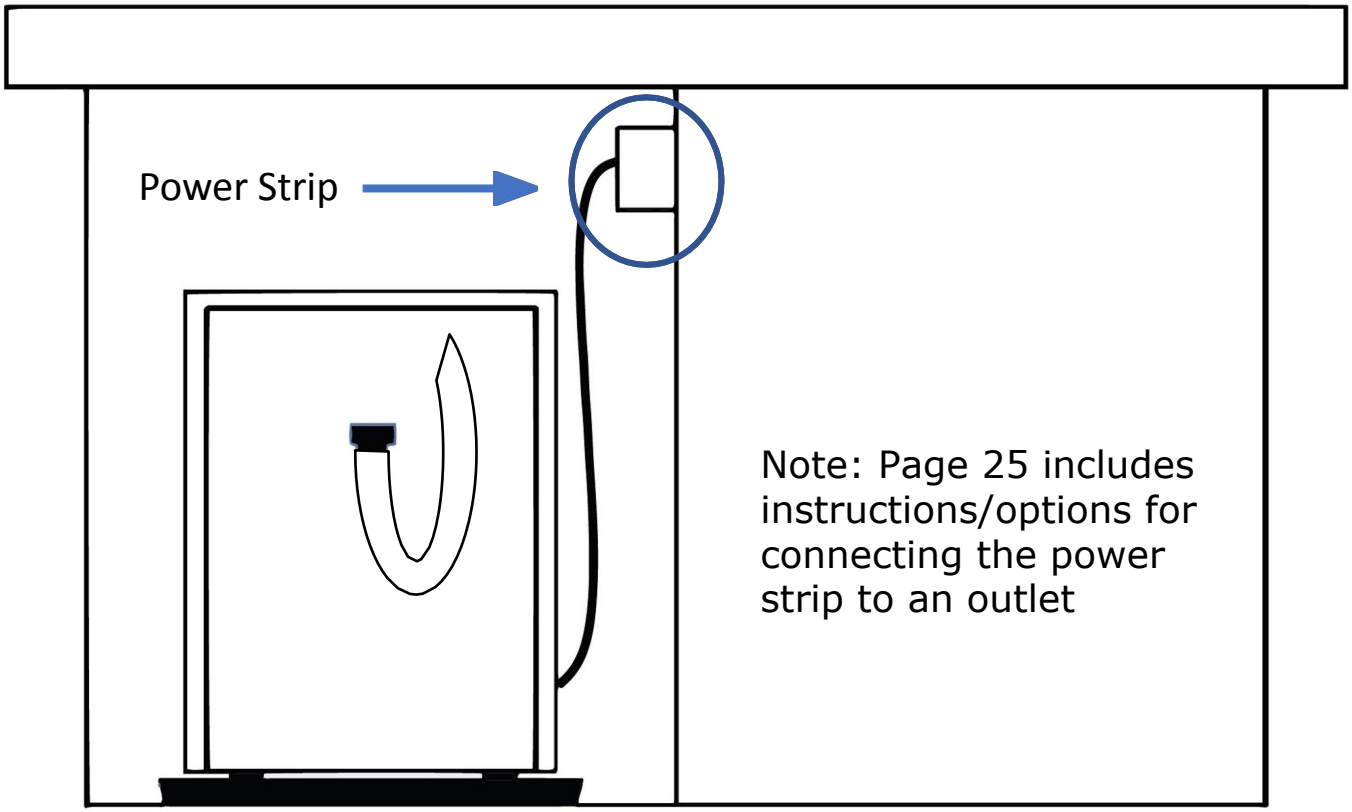

When mounting the power strip, the on/off switch should be in an easy-to-access location.
Show this switch to the customer before finishing installation.

NOTE: DO NOT PLACE POWER STRIP IN A LOCATION THAT HAS INCREASED CHANCES OF WATER EXPOSURE

2020 Bevi. All Rights Reserved
support@bevi.co – (866)-704-2384

Power Strip

Mounting Hole Template

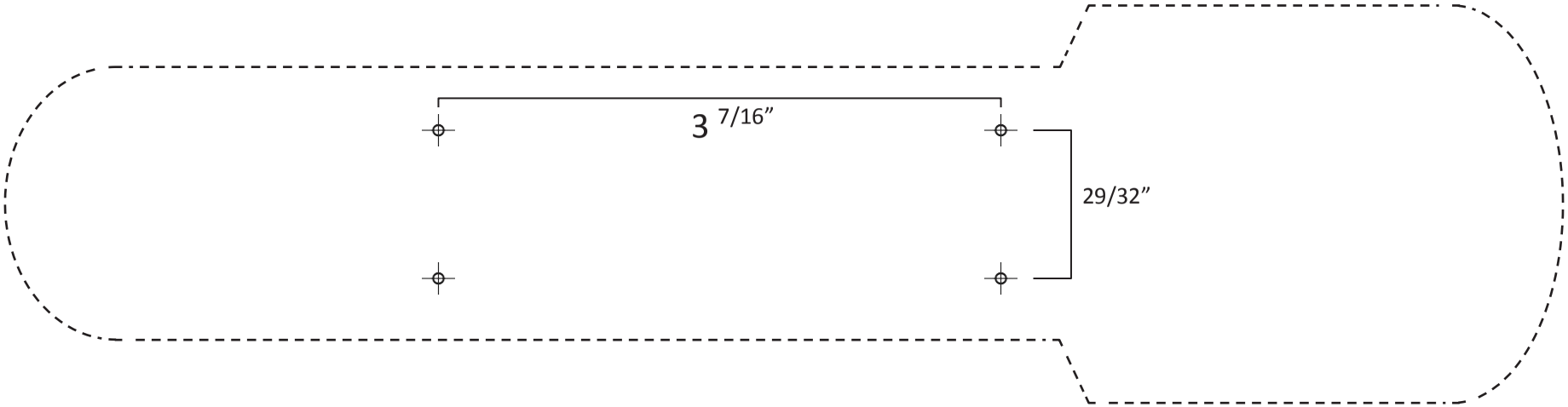

Step 1: Cut out and tape template to desired installation location. Make sure you have enough clearance for the power strip to be mounted correctly.

Step 2: Drill 1/16” pilot holes in each of the marked locations.

Step 3: Use #4 wood screws to install Power Strip.

2020 Bevi. All Rights Reserved
support@bevi.co – (866)-704-2384

bevi® pour something good

Step 5: Console & Flavor Setup

Or you can watch it here!
bit.ly/ctconsole

Console located in Box 2 of 3

Make sure console is placed **directly above** the Chiller/Carbonator unit completely covering the 4" hole.

Edge of 4" hole must be at least 5" from the back wall

See page 22 for instructions on securing console to the counter

Drill countertop hole according to Countertop Hole Template, Page 6.

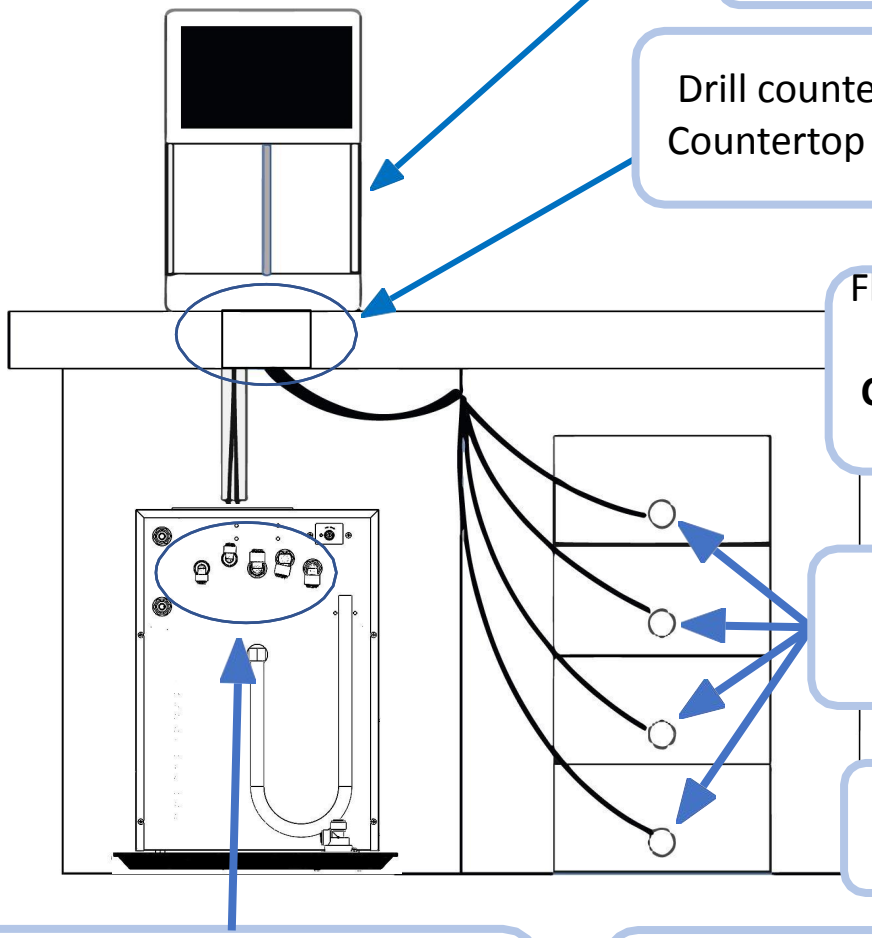

Flavor valves for this setup located in **"Valves and Connectors"** bag in Box 1 of 3

Connect flavor lines to boxed flavor concentrates

Do ***not*** install the unit next to a dishwasher

Connect still water, sparkling water, and ice bank recirculation lines to corresponding tubes in the insulated bundle, see Page 17.

Keep the flavors as low as possible if they are in the same cabinet with the Chiller/Carbonator, but generally we recommend they be separated from the Chiller/Carbonator.

2020 Bevi. All Rights Reserved
support@bevi.co – (866)-704-2384

Step 5: Console & Flavor Setup

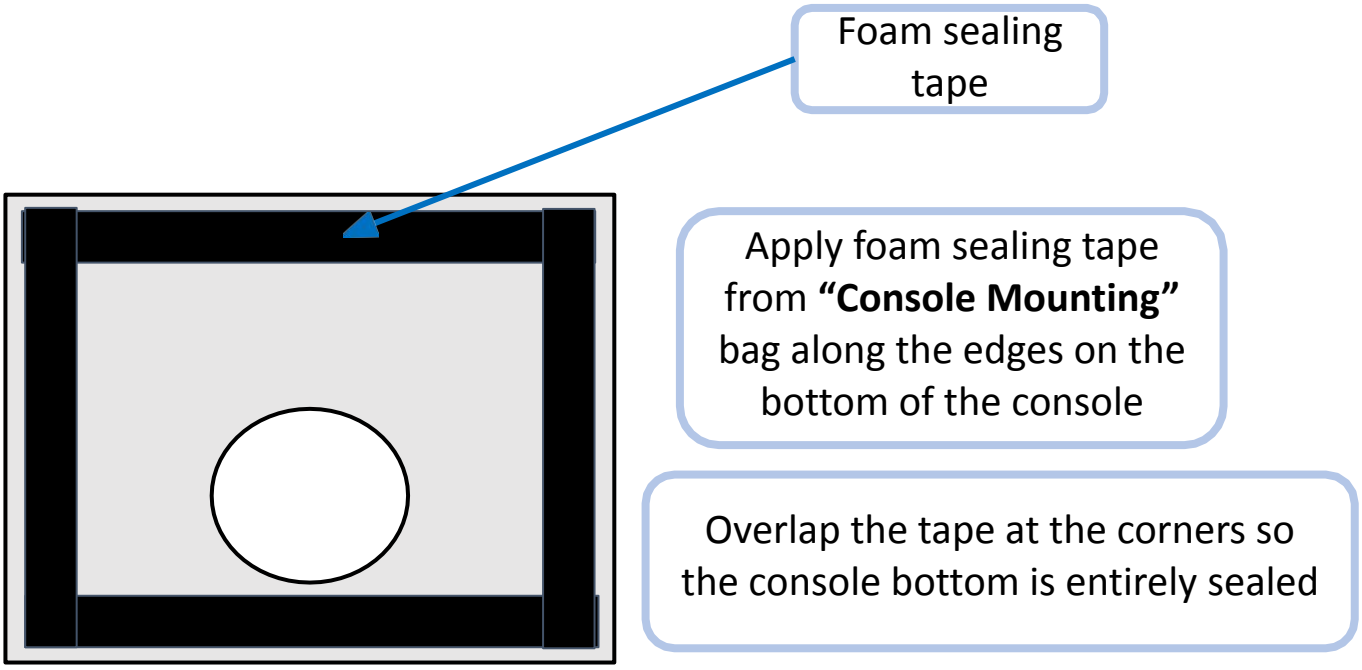

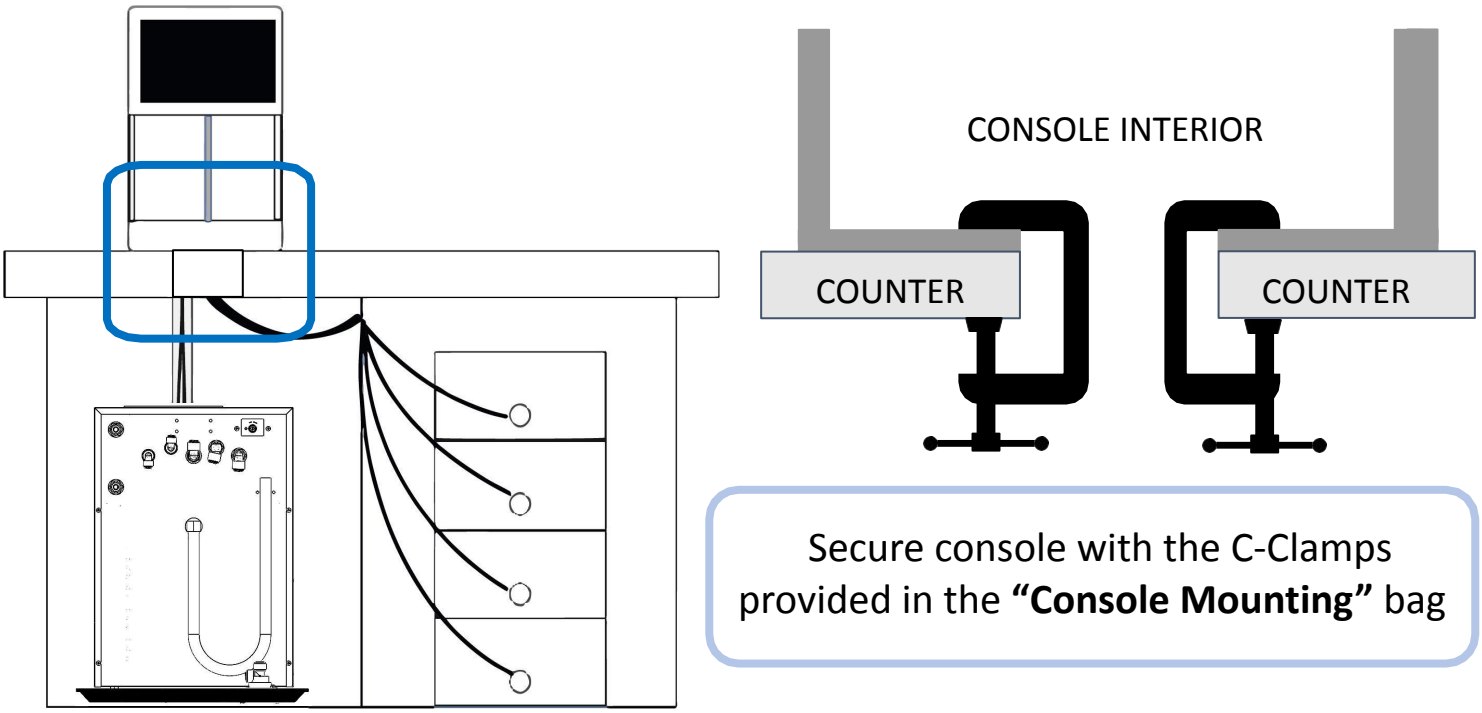

It is critical that the console unit fully cover the countertop hole. Any exposed gaps will reduce the ability of the console to create a proper seal on the countertop. This will reduce air movement through the system and will result in overheating of the cabinet.

2020 Bevi. All Rights Reserved
support@bevi.co – (866)-704-2384

Step 6: Connecting Console to Chiller/Carbonator

Or you can watch it here!
bit.ly/ctconsole

CHILLER/CARBONATOR MUST BE POWERED OFF FOR THIS STEP

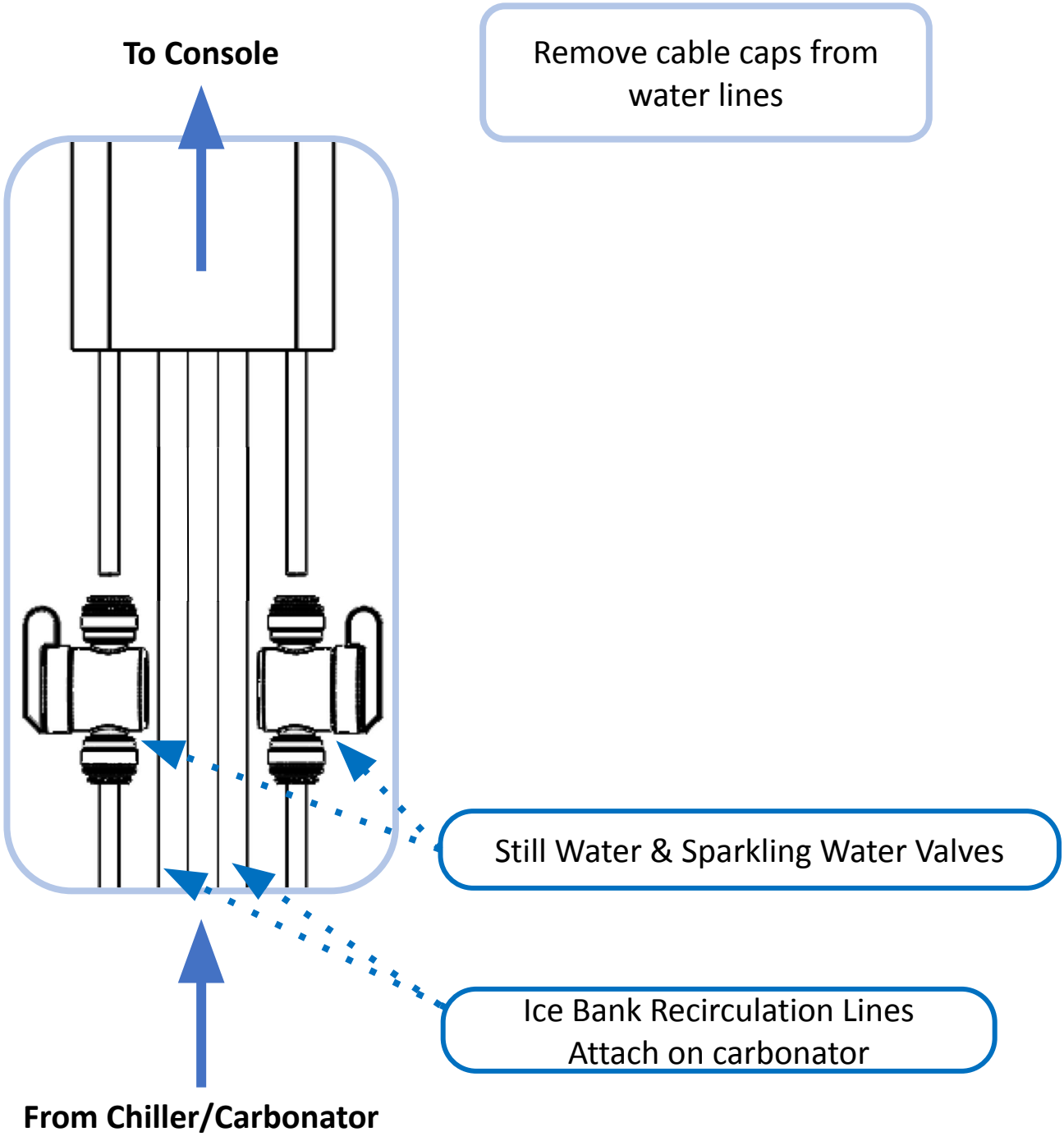

2020 Bevi. All Rights Reserved
support@bevi.co – (866)-704-2384

Step 7: Connecting Console to Power Strip

Or you can watch it here!
bit.ly/ctconsole

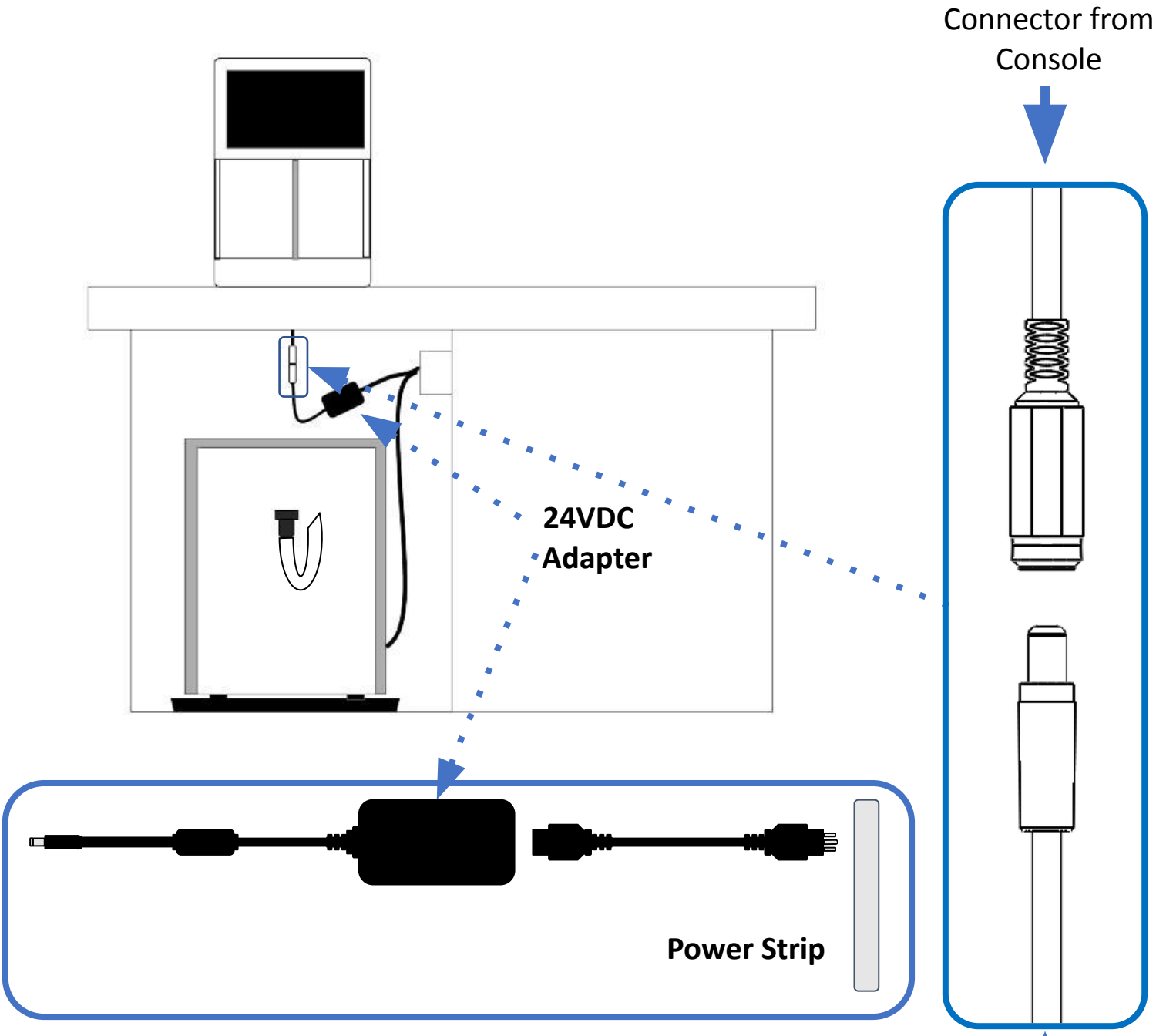

24V DC adapter located in **"Power"** bag in Box 1 of 3

2020 Bevi. All Rights Reserved
support@bevi.co – (866)-704-2384

Step 8: Connecting Power Strip to Outlet

Starting in July 2022, a hole with a pre-installed grommet has been added to the back panel of the console that allows for the passage of any of the following cables:

- Power Strip Cable
- Countertop Console Power Cable
- Carbonator Power Cable
- Ethernet Cable

Under no circumstances can any items other than the above listed cables be routed through the grommet (i.e. no routing of water lines nor other non-listed cables)

Note: It is not required to route any of the approved cables through the grommet. The grommet use is an option if electrical and/or ethernet outlet locations require above countertop cable routing.

The grommet is useful if the nearest available wall outlet is located above the countertop. In these scenarios, mount the power strip under the countertop (per step 4) with the cable routed up through the console and out of the console via the grommet. Connect the power strip cable to the 110v wall outlet above the countertop. Connect the console and carbonator power cables to the mounted power strip under the countertop (per step 7).

There may be scenarios where the unit needs to connect to an ethernet jack above the countertop. For those scenarios, route the the ethernet cable through the console and out the grommet.

A typical example scenario is pictured below:

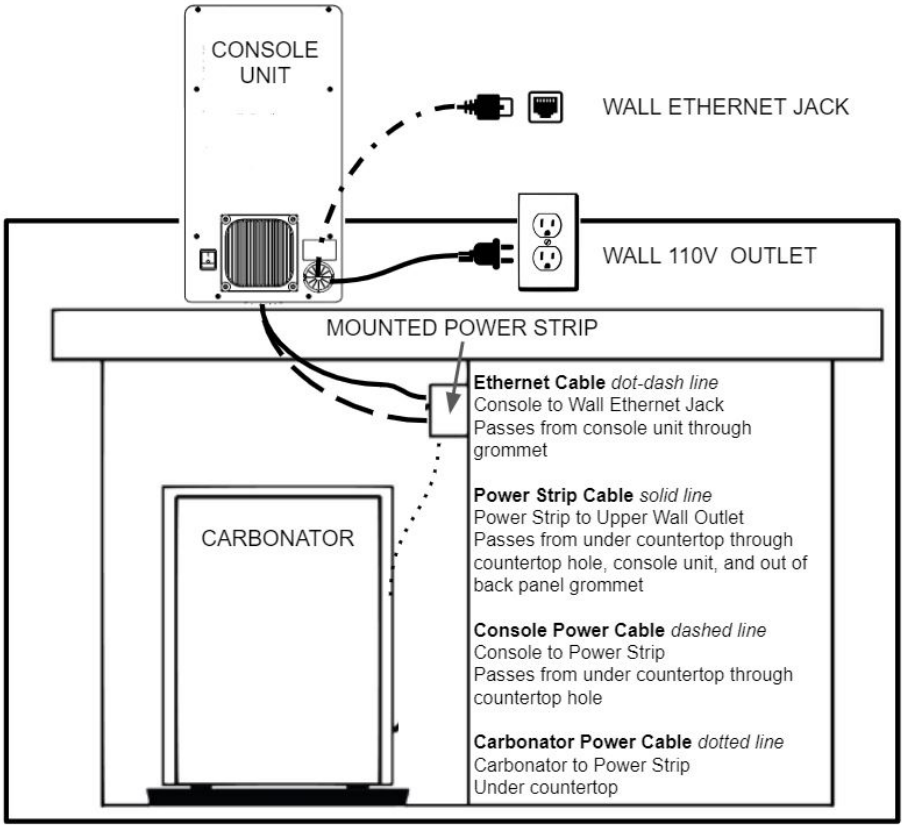

2020 Bevi. All Rights Reserved
support@bevi.co – (866)-704-2384

Step 9: CO_2 Tank Setup

Or you can watch it here!
bit.ly/ctco2tank

Components for these tasks located in **"Hardware"** bag in Box 1 of 3

There will be extra locking clips at the end of installation

NOTE: Either a 5 or 10 lb tank fits in the cabinet

Drill holes according to CO_2 Tank Brackets Mounting Hole Template, Page 26.

#8 Wood Screws

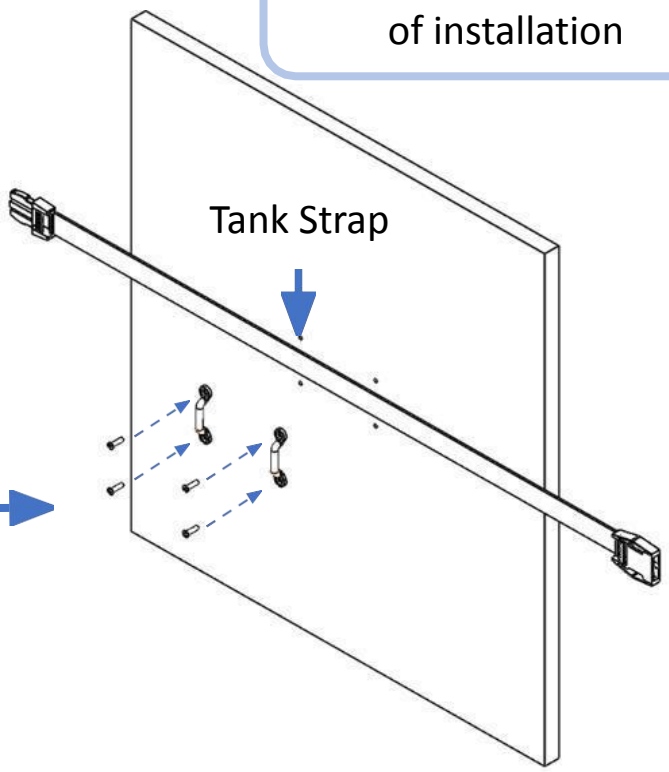

Set to 87 psi (6 bar)

Make sure the CO_2 regulator fits in the cabinet

Use a flathead screwdriver to adjust the pressure.
Clockwise: Increase Pressure
Counter-Clockwise: Decrease Pressure

Strap around middle of tank

Place tank + mounting hardware in any cabinet, except next to Chiller/Carbonator

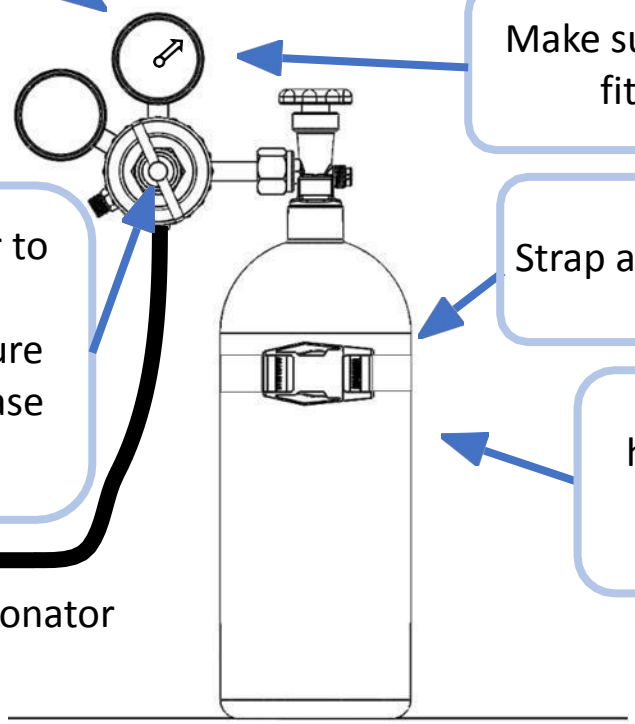

To Chiller/Carbonator

2020 Bevi. All Rights Reserved

CO_2 Tank Brackets
Mounting Hole Template

Step 1: Cut out and tape template to desired installation location. Make sure you have enough clearance for the CO_2 tank to be mounted correctly.

Step 2: Drill 1/8” pilot holes in each of the marked locations.

Step 3: Use #8 wood screws to install the CO_2 Tank Brackets, included in the **“Hardware”** bag.

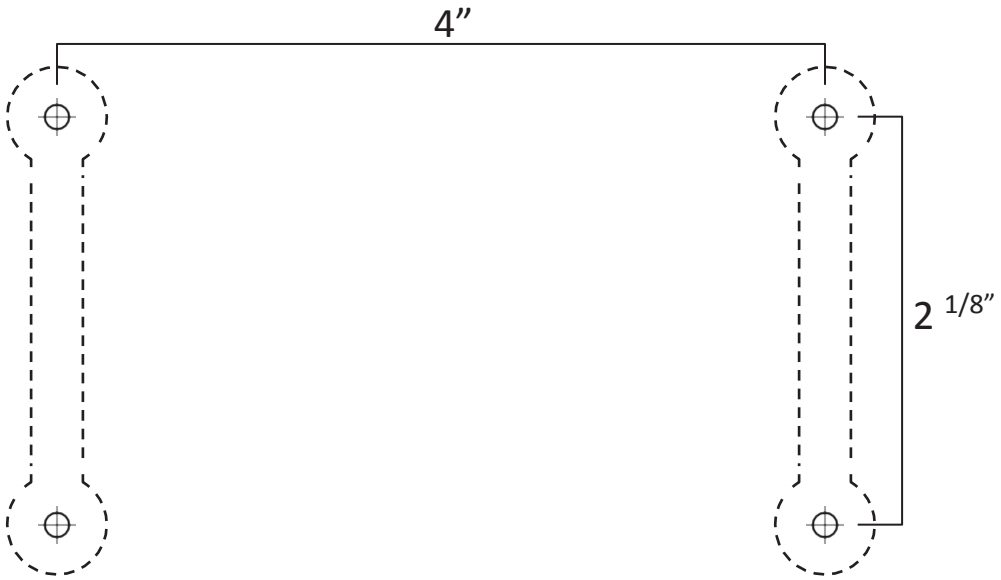

2020 Bevi. All Rights Reserved

Step 10: Insulating the Recirculation Lines

The insulation tape can be found in the **"Console Mounting"** bag

Recirculation Loop Insulation

Use the tape to completely wrap any exposed tubes extending from the recirculation line bundle, which could develop condensation

Use the tape to also wrap the fittings attached to the recirculation tubes, which can also develop condensation

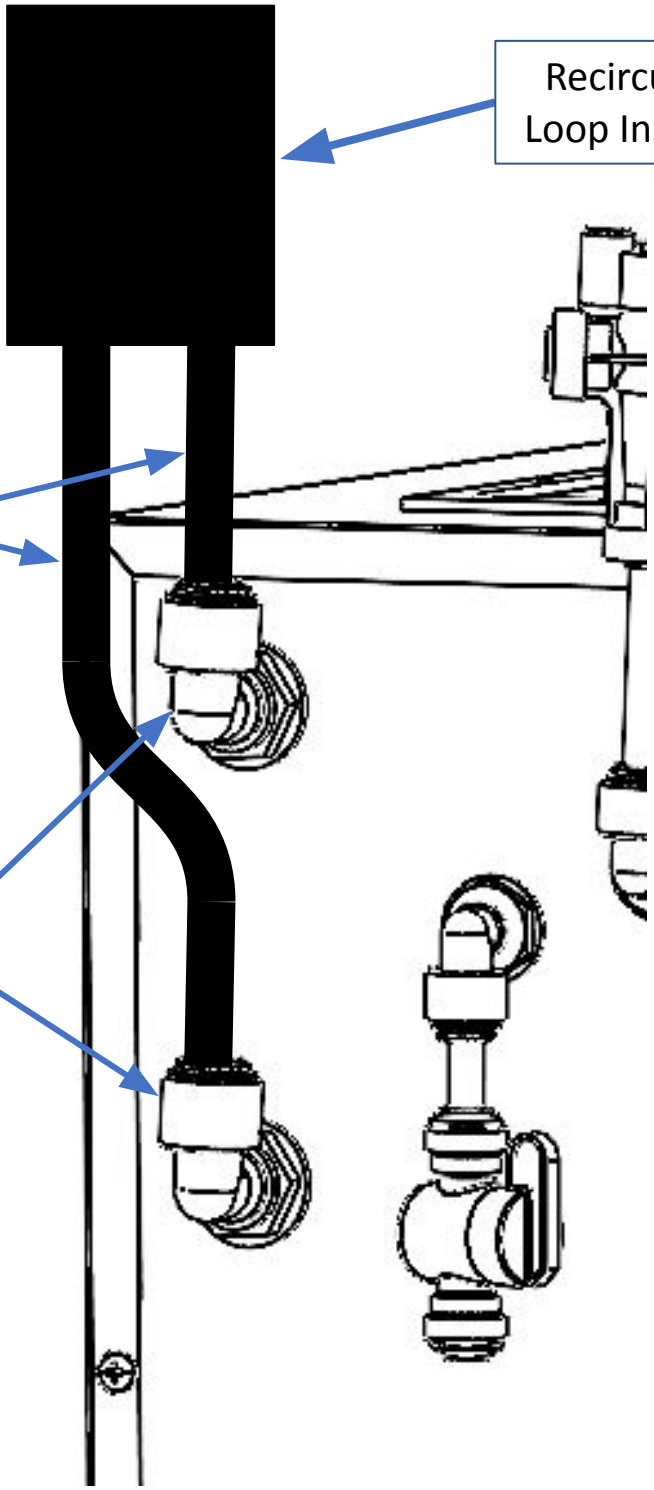

2020 Bevi. All Rights Reserved

Step 11: Filling the Ice Bank

Or you can watch it here!
bit.ly/ctco2tank

Detach the water inlet line from the carbonator and reattach to the Ice Bank Fill fitting

Detach the overflow tube from the securing clips on the front of the carbonator

Place the end of the overflow tube in a bucket

Open the water source valve to fill the ice bank until water trickles into the bucket

Once water starts to fill the bucket, close the water source valve

Replace the overflow tube in the securing clips on the front of the carbonator

Detach the water inlet line from Ice Bank Fill fitting and reattach to the Water In fitting

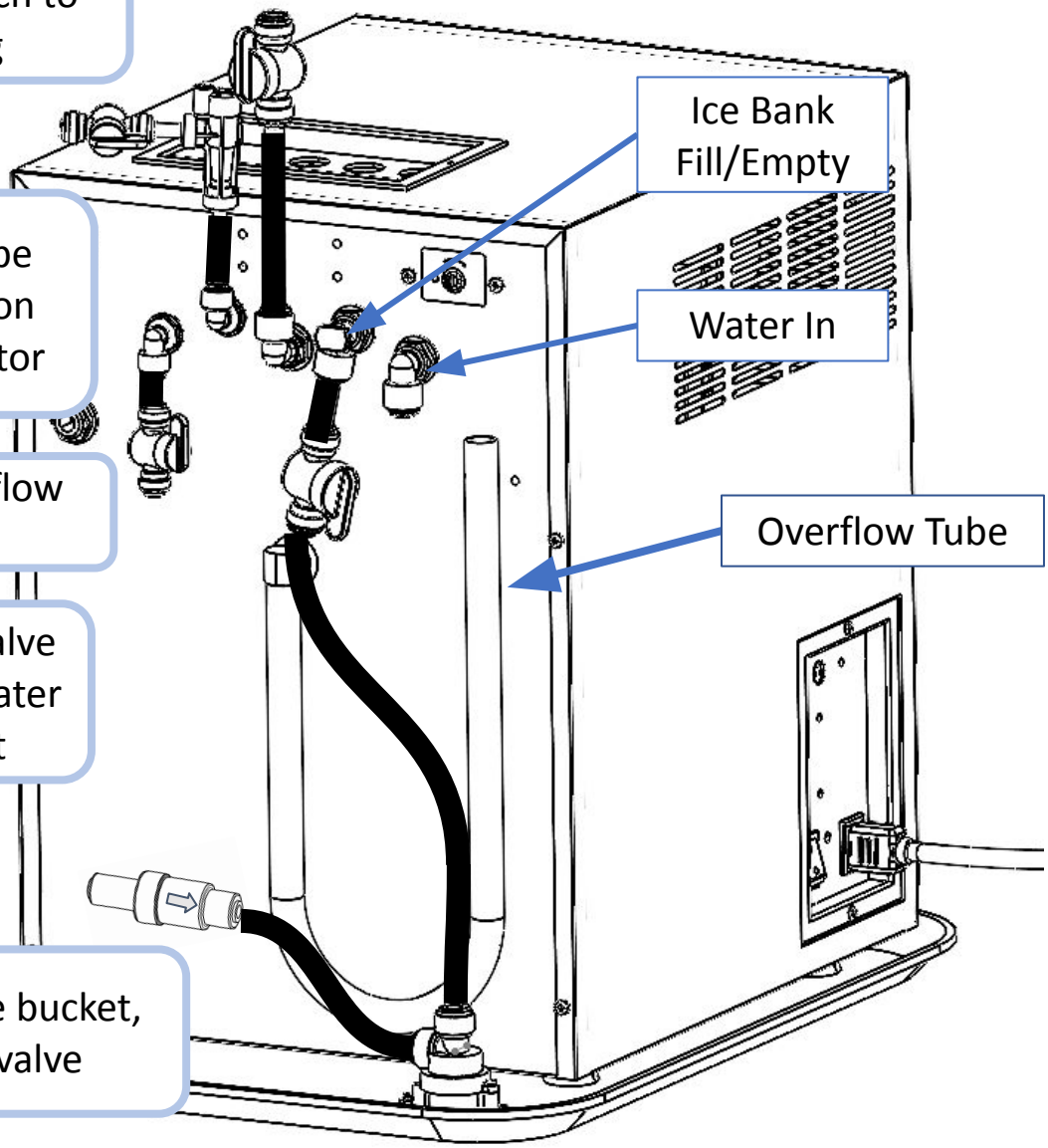

2020 Bevi. All Rights Reserved
support@bevi.co – (866)-704-2384

Step 12: Installing the Backflow Preventer

Assemble the backflow preventer per the included one page instructions (995-0002) that shipped in the backflow preventer kit. The assembly SOP is also found as a tech tip on partners.bevi.co. Once assembled, follow step 10 for installation.

NOTE: An ASSE-approved backflow preventer is required to meet NSF standards

Turn off water to the system

Dispense water from the head unit to relieve pressure

Using tube cutters, cut the water line after the water passes through the waterblock and filter

Note: Do not cut the tube at an angle (this might cause a leak)

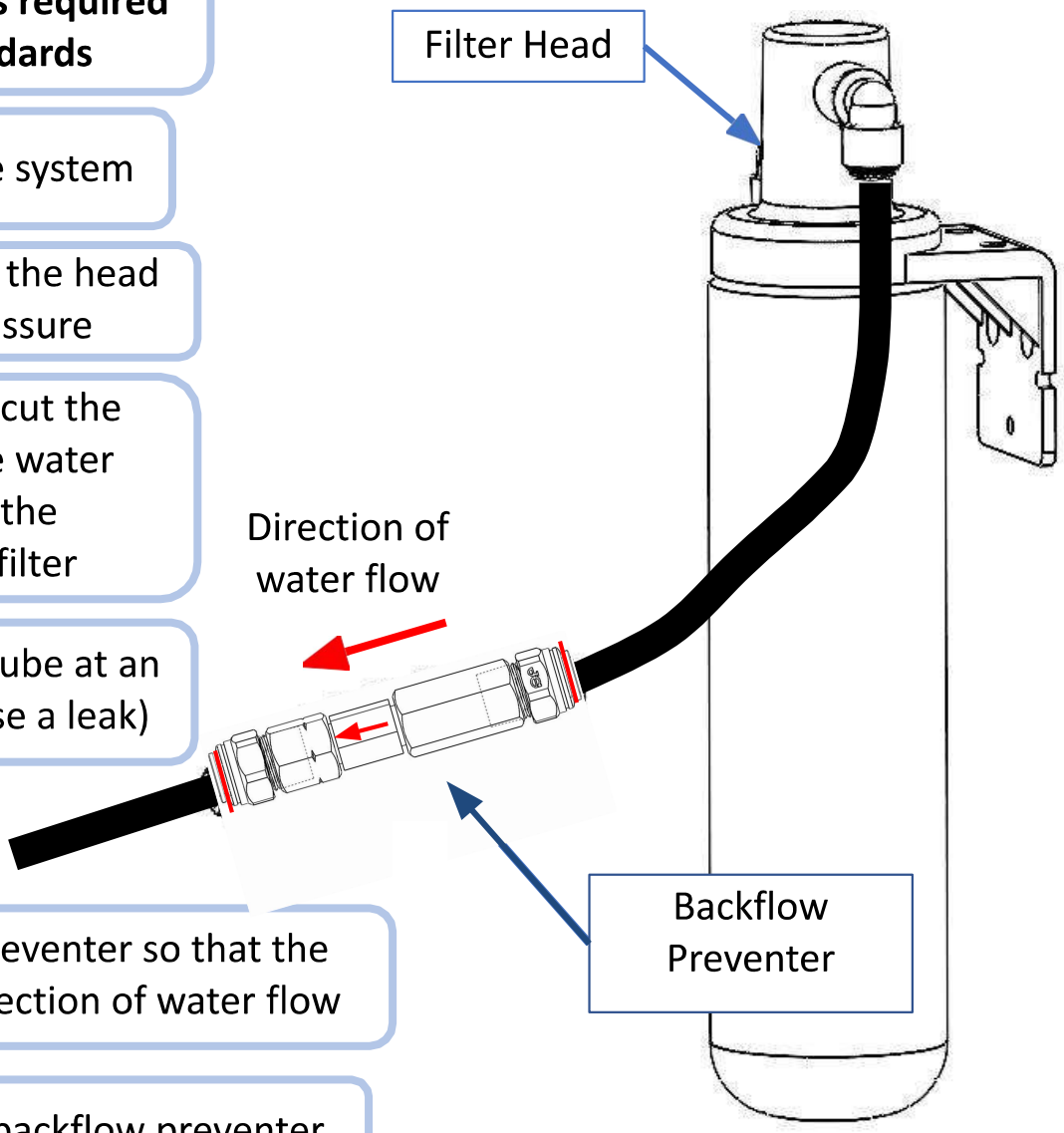

Insert the backflow preventer so that the arrows point in the direction of water flow

Attach red clips to the backflow preventer

Turn on the water supply

Check for leaks at the connection locations on the backflow preventer

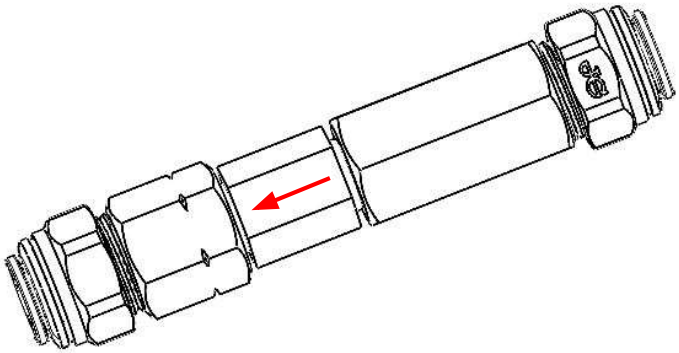

2020 Bevi. All Rights Reserved
support@bevi.co – (866)-704-2384

Step 13: Service Panel Startup

Or you can watch it here!
bit.ly/ctsoftware

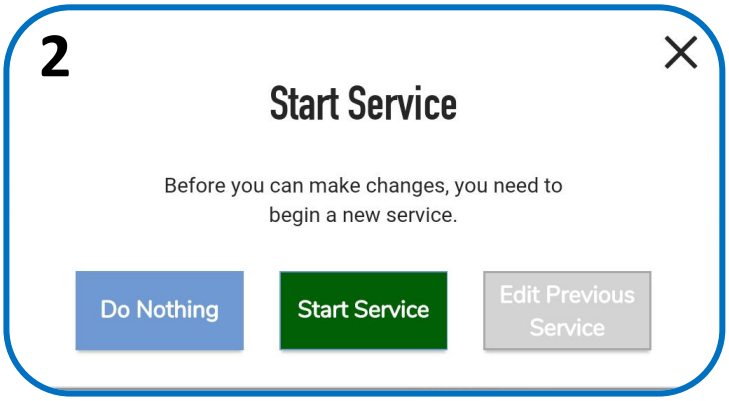

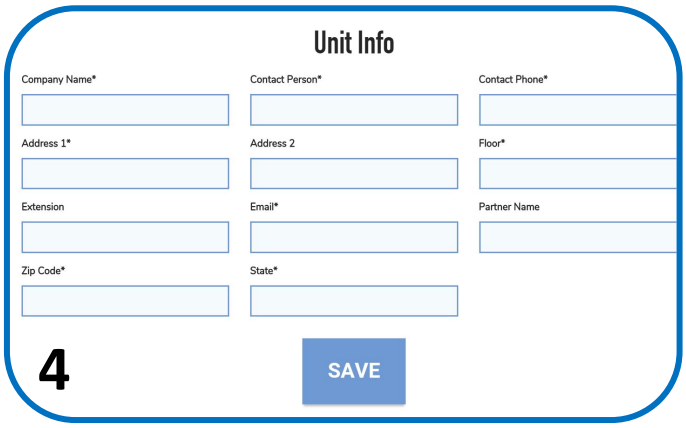

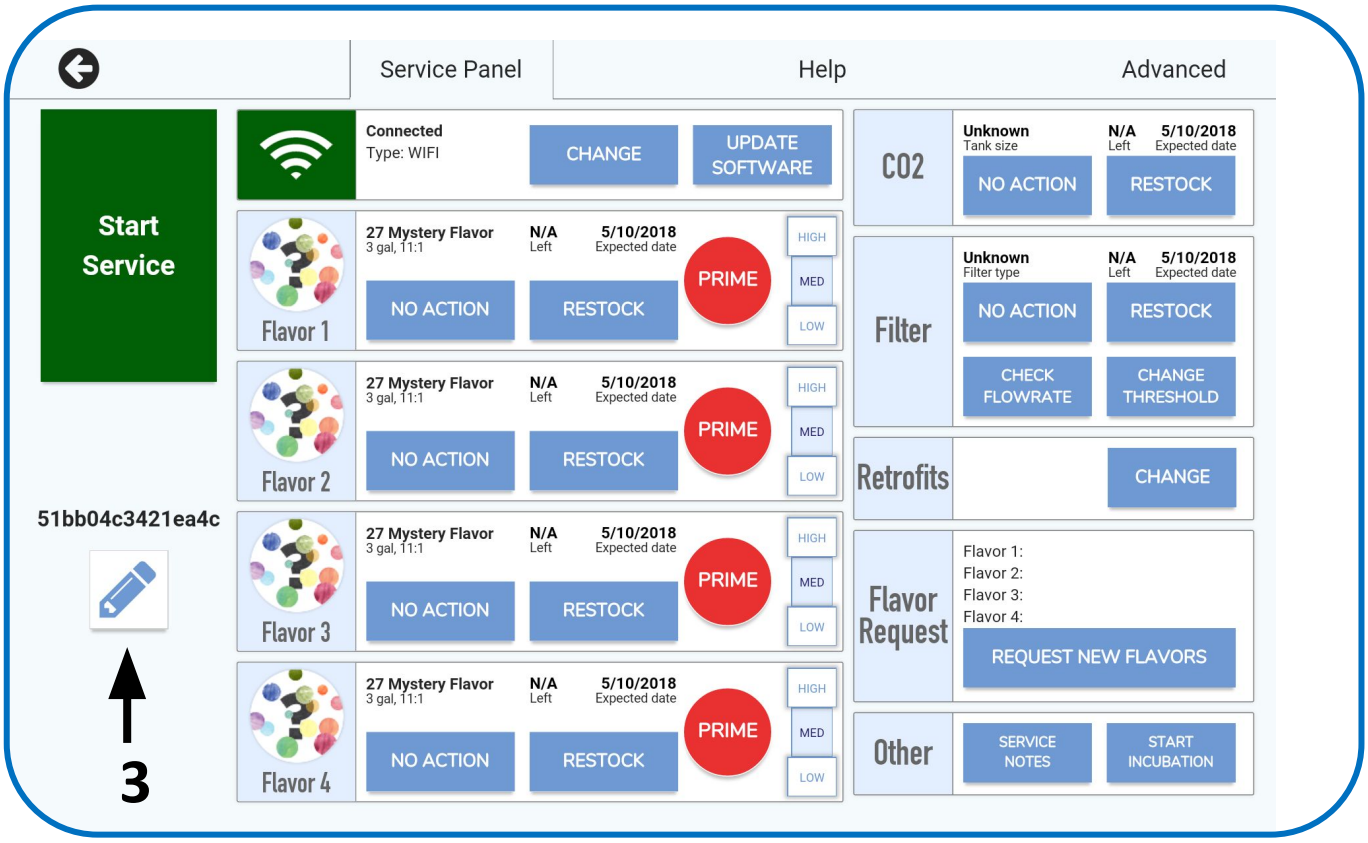

1. Enter the Service Panel.
2. When prompted, select ‘Start Service’.
3. Select the Pencil icon to open the Unit Info popup window.
4. Fill out the Unit Info popup window. When finished, select ‘SAVE’.

2020 Bevi. All Rights Reserved
support@bevi.co – (866)-704-2384

Step 14: Internet Connection Setup

Or you can watch it here!
bit.ly/ctsoftware

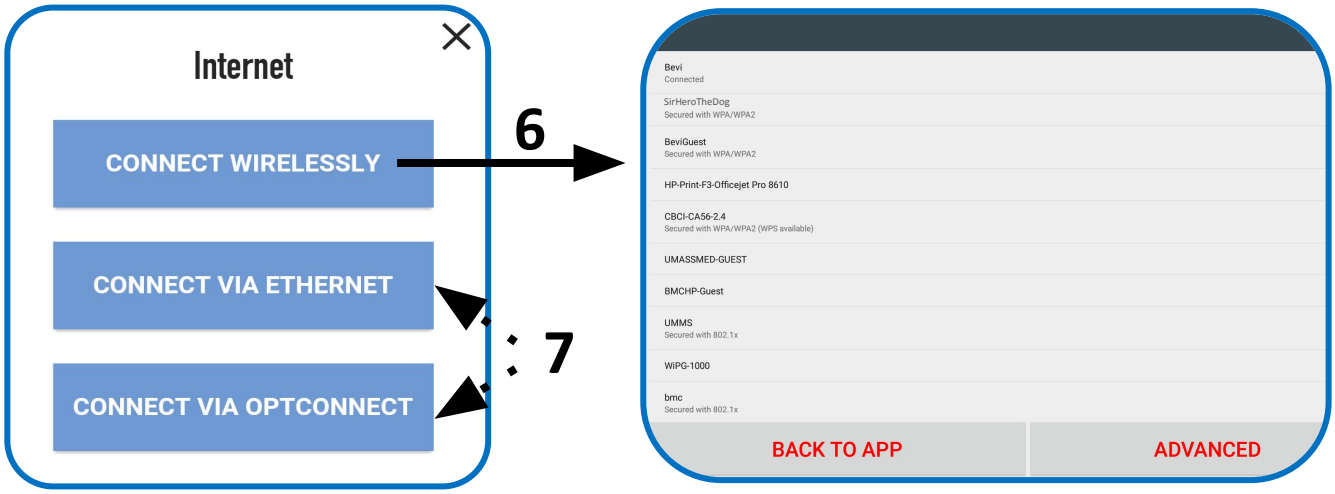

5. Find the icon, and select 'RECONNECT' to bring up the Internet popup window.
6. If using a Wifi connection, select 'Connect Wirelessly' on the Internet popup window. Select the appropriate Wifi network from the list.
7. If connecting via OptConnect or Ethernet, select the appropriate option on the Internet popup window, and follow the instructions.
8. The icon should now be green. If not, you will need to troubleshoot the connection.

2020 Bevi. All Rights Reserved
support@bevi.co – (866)-704-2384

Step 14: Flavors, CO_2, & Filter Selection

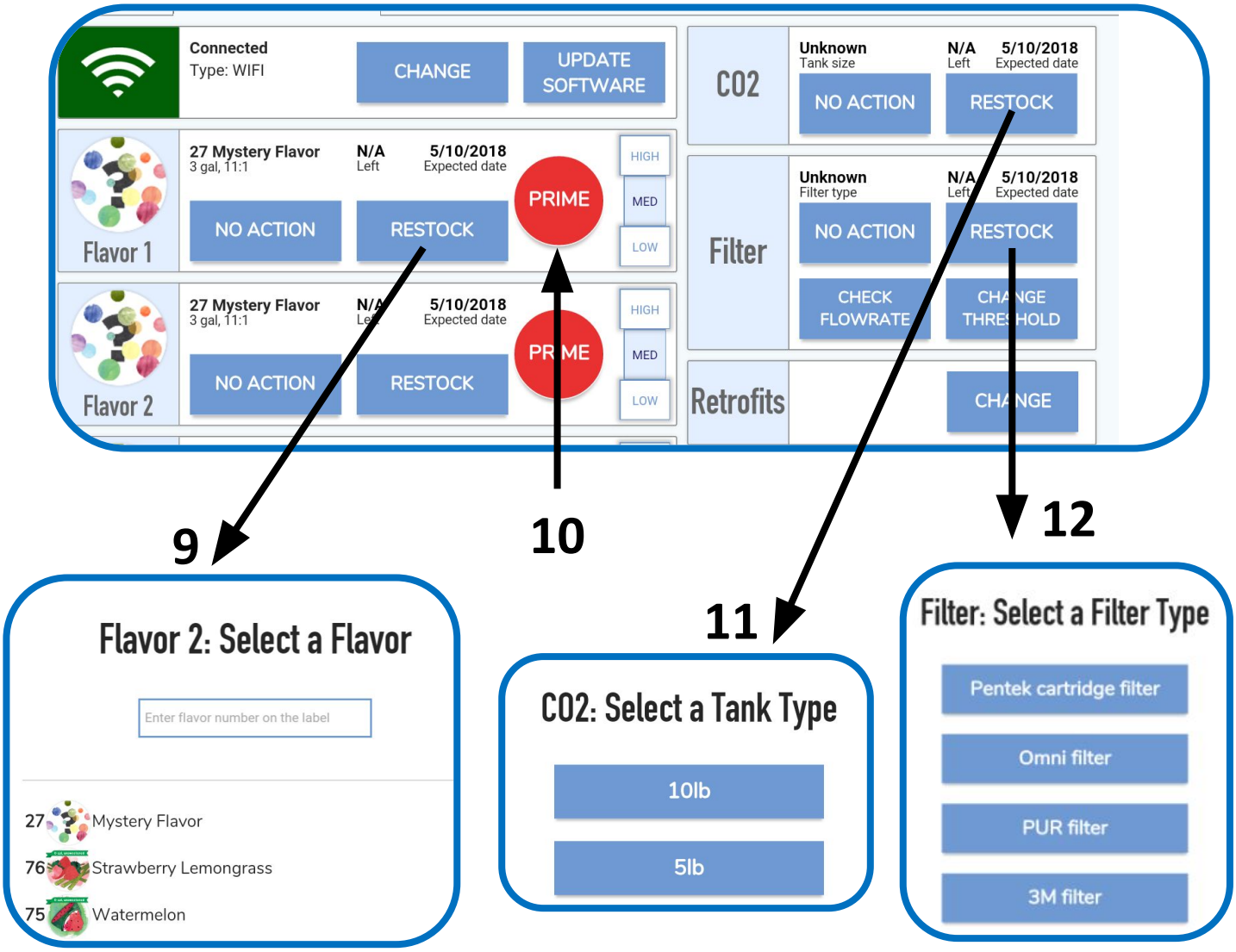

9. Select 'RESTOCK' for each flavor. You will be prompted to key in the corresponding flavor number.
10. Prime each flavor line using the red 'PRIME' button.
11. Find the CO_2 section and select 'RESTOCK'. Select the appropriate tank type on the popup window.
12. Find the Filter section and select 'RESTOCK'. For Countertop Bevi units, select the '3M Filter' option.

2020 Bevi. All Rights Reserved
support@bevi.co – (866)-704-2384

Step 15: Sparkling Flow Rate Calculation

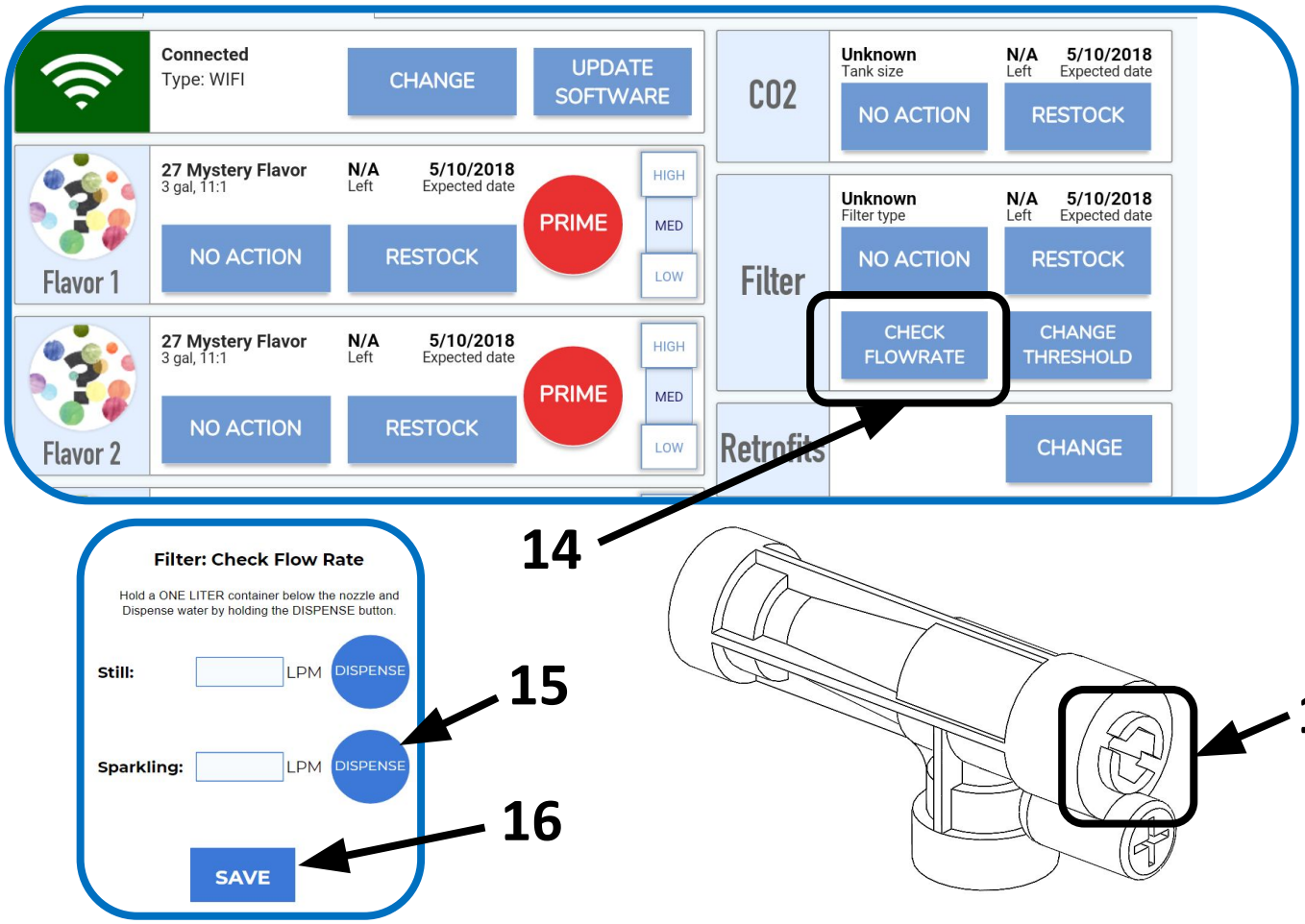

13. Use a 1L measured container (water bottle or collapsible bucket with gradiation).

14. Under “Filter” tap on “Check Flow Rate”. Press and hold the SPARKLING button to dispense.

15. Hold a sparkling dispense until 1L has been dispensed into the container. The panel will automatically calculate the flow rate.

16. Once flow rate is calculated, hit save if the number is between 3L/in and 3.5 L/min.

17. If the number is lower/higher, use a 6mm hex wrench or flathead screwdriver to tighten/loosen the flow compensator. Tightening lowers the flow rate and loosening increases the flow rate.

18. Exit the service panel and follow the steps above 13-16 until calibration meets requirements.

2020 Bevi. All Rights Reserved
support@bevi.co – (866)-704-2384

Step 16: Touchscreen ID & Incubation Setup

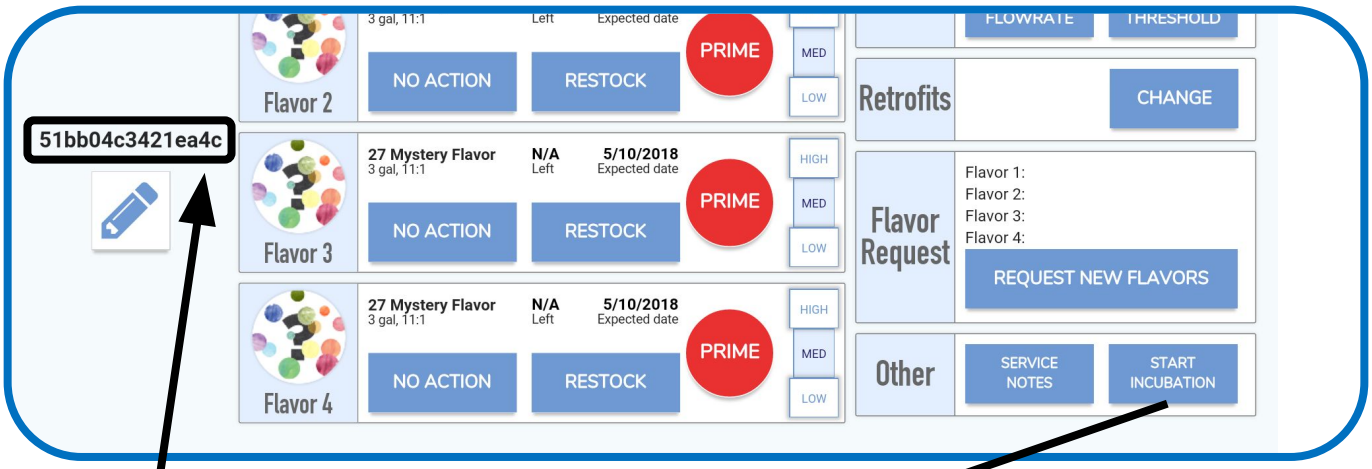

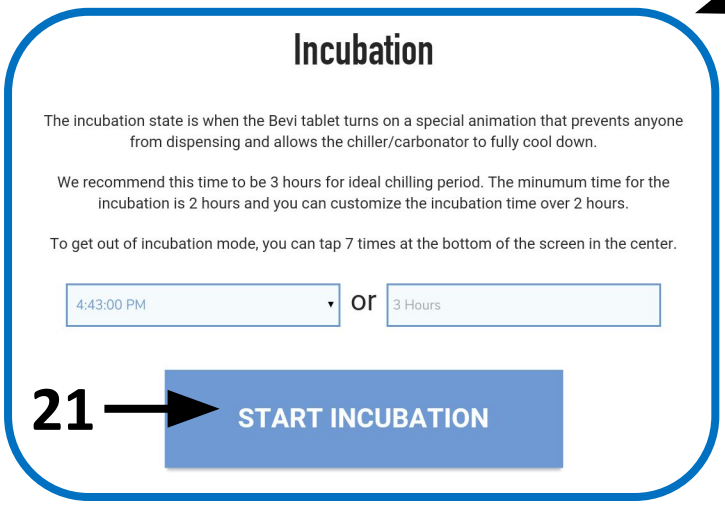

19. If needed, you can find the **Touchscreen ID** above the pencil icon.

20. When all other software steps are complete, find the Other section, and select 'START INCUBATION' to bring up the Incubation popup window.

21. Select 'START INCUBATION' to begin the Incubation process.

22. Exit the service panel. You should see an Incubation timer screen.

NOTE: INCUBATION IS A MANDATORY PART OF THE INSTALLATION PROCESS. WITHOUT IT, THE BEVI TEMPERATURE WILL BE TOO HIGH TO PROPERLY OPERATE. DO NOT SKIP THIS STEP.

2020 Bevi. All Rights Reserved

Congratulations!

You have now completed the Countertop Bevi installation.

If you have any questions or issues, call our support line at (866)-704-2384, or email us at support@bevi.co.

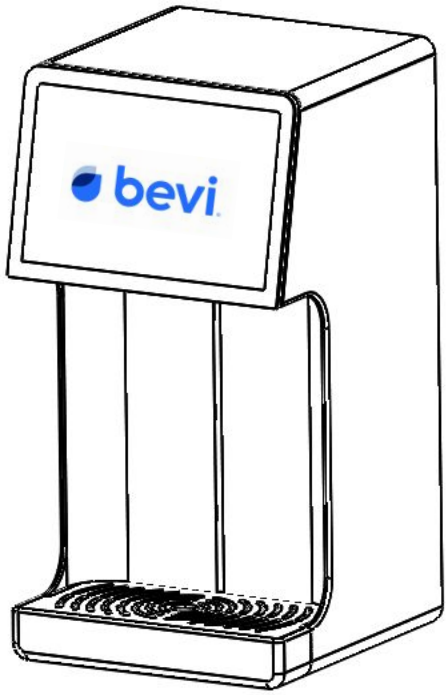

2020 Bevi. All Rights Reserved