APPROVAL SHEET

FR4 ANTENNA

RGFRA Series – RoHS Compliance

Halogens Free Product

2.4 GHz ISM Band RF Application

P/N: RGFRA8010110A2T

*Contents in this sheet are subject to change without prior notice.

FEATURES

1. Surface Mounted Devices with a small dimension of 8.0 x 1.0 x 1.1 mm.
2. Antenna Frequency for 2400-2500 MHz

APPLICATIONS

1. For Miniaturized Bluetooth System

DESCRIPTION

Walsin Technology Corporation develops a new antenna specified for 2.4 GHz ISM Band application, as shown in below "CONSTRUCTION". It's application typically located on this unlicensed frequency band which range covers from 2.4GHz to 2.5GHz.

CONSTRUCTION (Unit: mm)

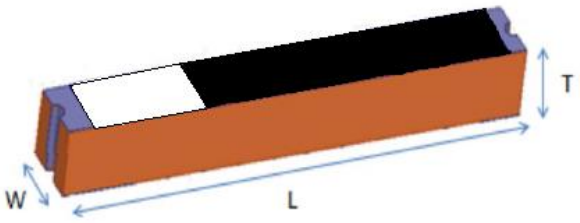

L : 8.0 ± 0.20
W : 1.0 ± 0.20
T : 1.1 ± 0.20

PCB TOP VIEW (Unit: mm)

A : 0.5 ± 0.2

PCB BOTTOM VIEW (Unit: mm)

B : 0.8 ± 0.2

ANTENNA ON TEST BOARD (FR4 THICKNESS 0.8mm)

Vertical type

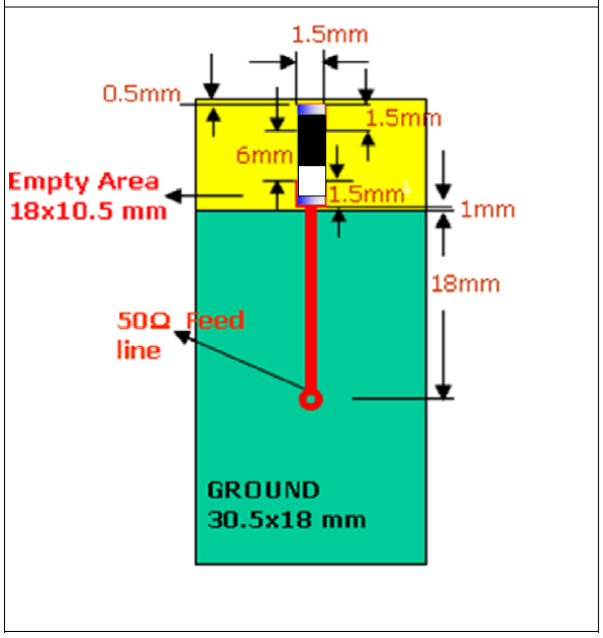

SOLDER LAND PATTERN DESIGN

Figure (Vertical type)

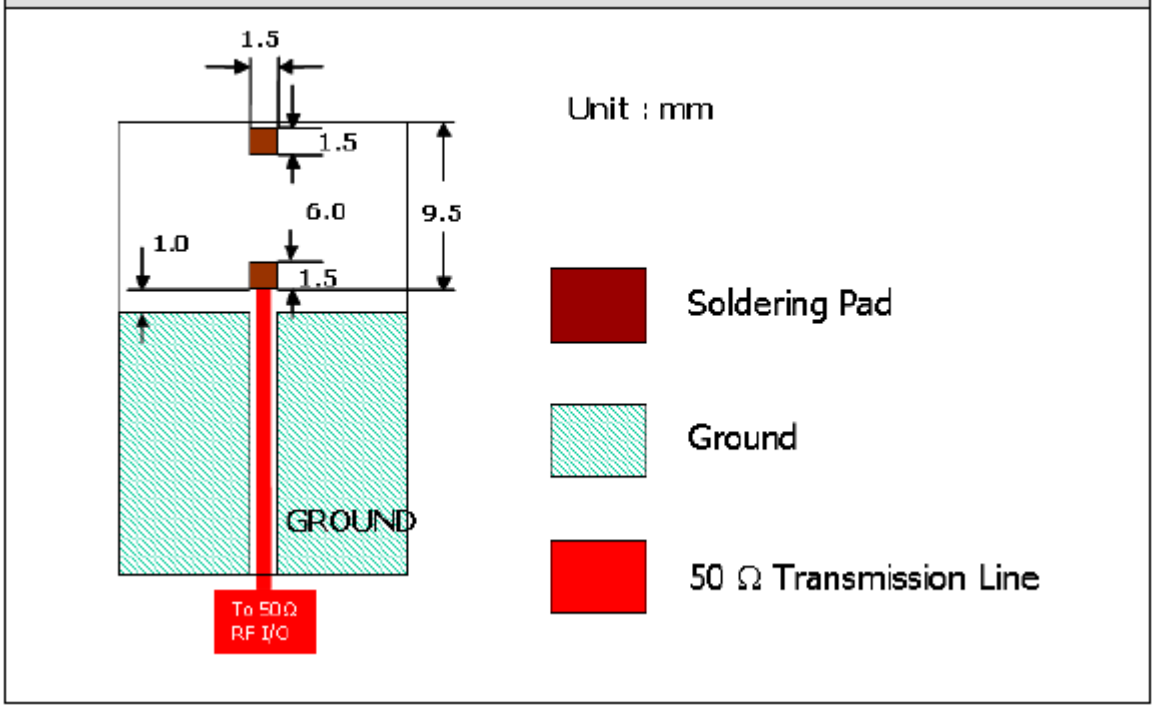

EVALUATION BOARD MATCHING CIRCUITS

ELECTRICAL CHARACTERISTICS

Part Number	**RGFRA8010110A2T**	
Central Frequency	2450	MHz
Bandwidth	±50 (Min.)	MHz
Return Loss	-9.6 (Max)	dB
Peak Gain	3.61	dBi
Impedance	50	Ohm
Polarization	Linear	
Azimuth Beamwidth	Omni-directional	

RETURN LOSS

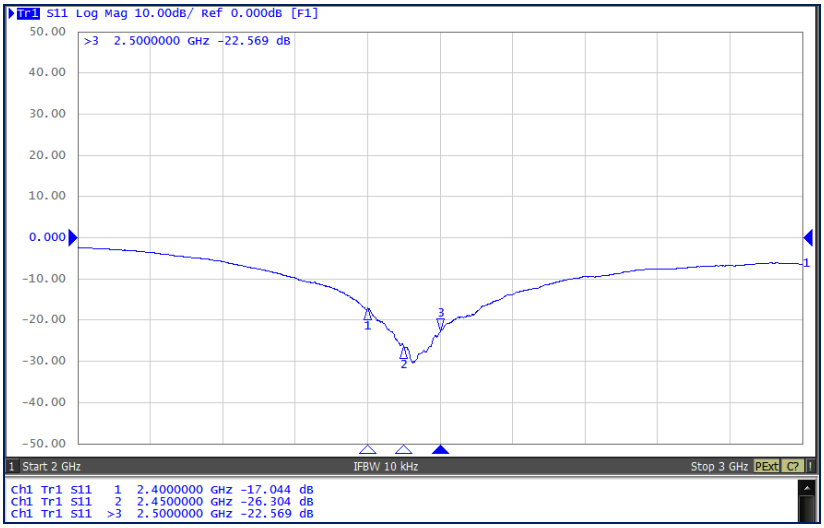

ANTENNA PEAK GAIN

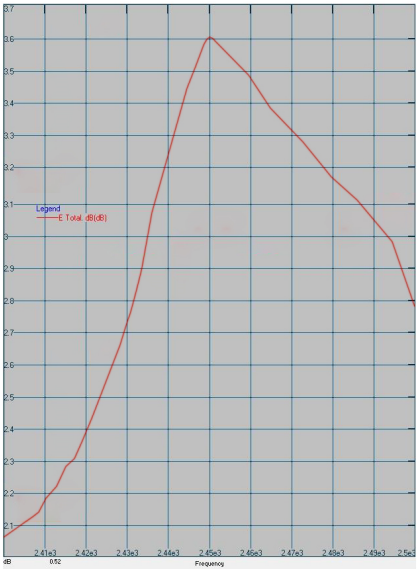

Maximum Peak Gain at 2450 MHz : 3.61dBi

ANTENNA EFFICIENCY

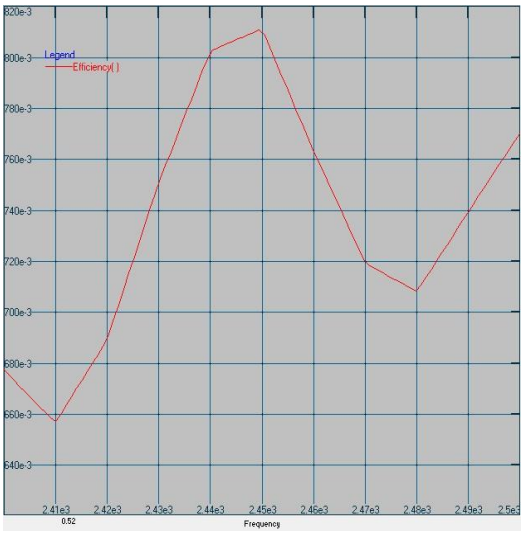

Maximum Efficiency at 2450 MHz : 81%

2D RADIATION PATTERNS

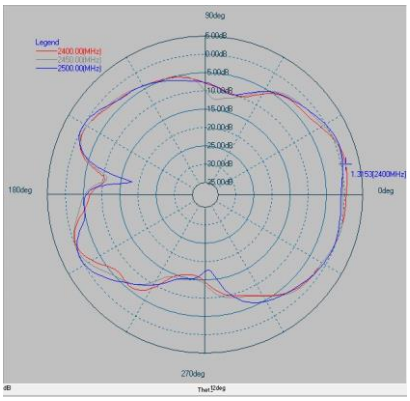

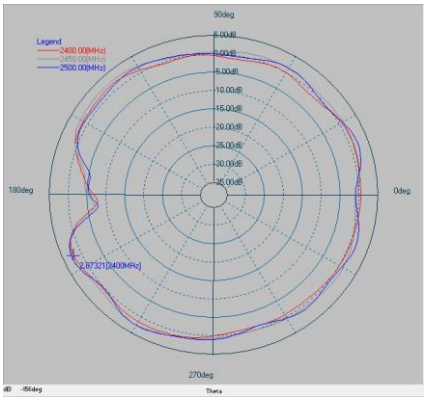

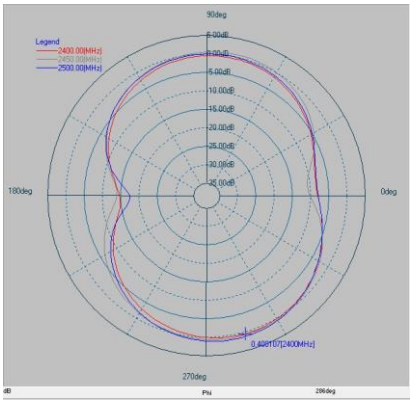

	ZX plane		ZY plane		XY plane	
Frequency [MHz]	Max Value [dB]	Average [dB]	Max Value [dB]	Frequency [MHz]	Max Value [dB]	Average [dB]
2400	1.32	-3.36	2.07	0.08	0.41	-3.09
2450	0.66	-3.30	3.61	0.82	0.75	-2.28
2500	0.93	-3.25	2.78	0.57	1.16	-2.50

RELIABILITY TEST

Test item	Test condition / Test method	Specification
Solderability JIS C 0050-4.6 JESD22-B102D	*Solder bath temperature：235 ±5°C *Immersion time：2 ± 0.5 sec Solder：Sn3Ag0.5Cu for lead-free	At least 95% of a surface of each terminal electrode must be covered by fresh solder.
Resistance to soldering heat JIS C 0050-5.4	*Preheating temperature：120~150°C, 1 minute. *Solder temperature：270±5°C *Immersion time：10±1 sec Solder：Sn3Ag0.5Cu for lead-free Measurement to be made after keeping at room temperature for 24±2 hrs	No mechanical damage. Electrical specification shall satisfy the descriptions in electrical characteristics under the operational temperature range within -40 ~ 85°C. Loss of metallization on the edges of each electrode shall not exceed 25%.
Drop Test JIS C 0044 Customer's specification.	*Height：75 cm *Test Surface：Rigid surface of concrete or steel. *Times：6 surfaces for each units；2 times for each side.	No mechanical damage. Electrical specification shall satisfy the descriptions in electrical characteristics under the operational temperature range within -40 ~ 85°C.
Vibration JIS C 0040	*Frequency：10Hz~55Hz~10Hz(1min) *Total amplitude：1.5mm *Test times：6hrs.(Two hrs each in three mutually perpendicular directions)	No mechanical damage. Electrical specification shall satisfy the descriptions in electrical characteristics under the operational temperature range within -40 ~ 85°C.
Adhesive Strength of Termination JIS C 0051- 7.4.3	*Pressurizing force： 5N (LGA terminal series)；5N(≦0603)；10N(>0603) *Test time：10±1 sec	No remarkable damage or removal of the termination.
Bending test JIS C 0051- 7.4.1	The middle part of substrate shall be pressurized by means of the pressurizing rod at a rate of about 1 mm/s per second until the deflection becomes 1mm/s and then pressure shall be maintained for 5±1 sec. Measurement to be made after keeping at room temperature for 24±2 hours	No mechanical damage. Electrical specification shall satisfy the descriptions in electrical characteristics under the operational temperature range within -40 ~ 85°C.

Temperature cycle JIS C 0025	1.30±3 minutes at -40°C±3°C, 2.10~15 minutes at room temperature, 3.30±3 minutes at +85°C±3°C, 4.10~15 minutes at room temperature, Total 100 continuous cycles Measurement to be made after keeping at room temperature for 24±2 hrs	No mechanical damage. Electrical specification shall satisfy the descriptions in electrical characteristics under the operational temperature range within -40 ~ 85°C.
High temperature JIS C 0021	*Temperature：85°C±2°C *Test duration：1000+24/-0 hours Measurement to be made after keeping at room temperature for 24±2 hrs	No mechanical damage. Electrical specification shall satisfy the descriptions in electrical characteristics under the operational temperature range within -40 ~ 85°C.
Humidity (steady conditions) JIS C 0022	*Humidity：90% to 95% R.H. *Temperature：40±2°C *Time：1000+24/-0 hrs. Measurement to be made after keeping at room temperature for 24±2 hrs ※ 500hrs measuring the first data then 1000hrs data	No mechanical damage. Electrical specification shall satisfy the descriptions in electrical characteristics under the operational temperature range within -40 ~ 85°C.
Low temperature JIS C 0020	*Temperature：-40°C±2°C *Test duration：1000+24/-0 hours Measurement to be made after keeping at room temperature for 24±2 hrs	No mechanical damage. Electrical specification shall satisfy the descriptions in electrical characteristics under the operational temperature range within -40 ~ 85°C.

SOLDERING CONDITION

Typical examples of soldering processes that provide reliable joints without any damage are given in following figure.
This product could sustain by reflow process three times, and the temperature below 260℃.

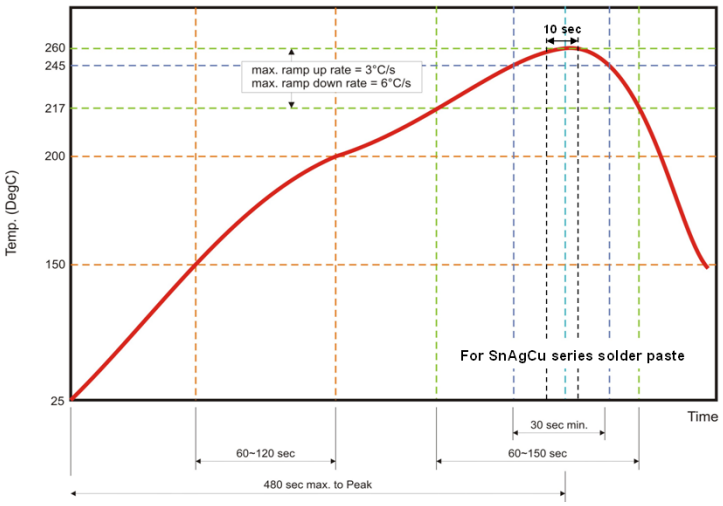

Infrared soldering profile

ORDERING CODE

RG	FRA	801011	0	A	2	T
Walsin RG: RF /Pb free device	**Product code** FRA : Antenna	**Dimension code** Per 2 digits of Length, Width, Thickness : e.g. : 801011= Length 80 Width 10 Thickness 11	**Unit of dimension** 0 : 0.1 mm 1 : 1.0 mm	**Application** A : 2.4GHz ISM Band	**Specification** Design Code	**Packing** T : Reeled

Minimum Ordering Quantity: 2000 pcs per reel.

PACKAGING

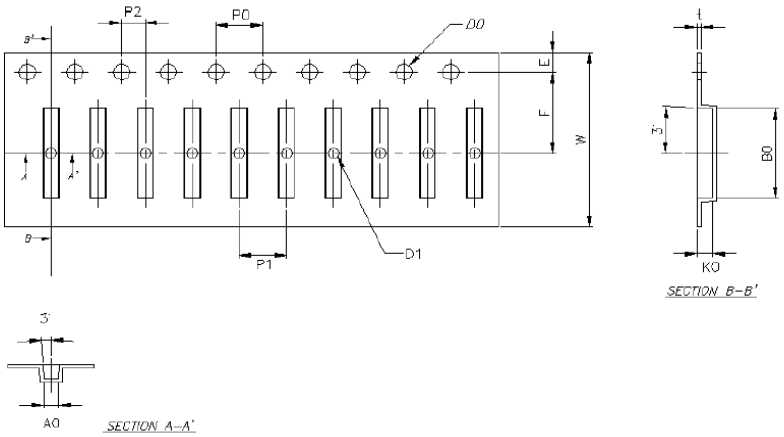

Plastic Tape specifications (unit :mm)

Index	W	E	F	P0	P1	P2
Dimension (mm)	16.00 ± 0.30	1.75 ± 0.10	7.50 ± 0.10	4.00 ± 0.10	4.00 ± 0.10	2.00 ± 0.10
Index	D0	D1	t	A0	B0	K0
Dimension (mm)	1.50 + 0.10	1.00 + 0.10	0.30 ± 0.05	1.25 ± 0.10	8.20 ± 0.10	1.30 ± 0.10

Reel dimensions

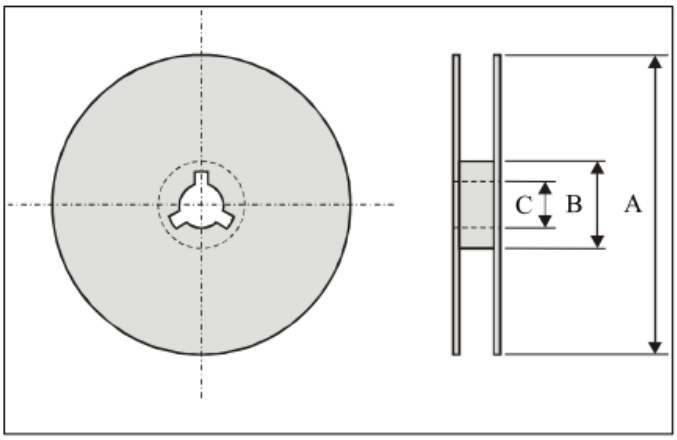

Index	A	B	C
Dimension (mm)	Φ178	Φ60.0	Φ13.0

Typing Quantity: 2000 pieces per 7" reel

CAUTION OF HANDLING

Limitation of Applications

Please contact us before using our products for the applications listed below which require especially high reliability for the prevention of defects, which might directly cause damage to the third party's life, body or property.

(1) Aircraft equipment
(2) Aerospace equipment
(3) Undersea equipment
(4) Medical equipment
(5) Disaster prevention / crime prevention equipment
(6) Traffic signal equipment
(7) Transportation equipment (vehicles, trains, ships, etc.)
(8) Applications of similar complexity and /or reliability requirements to the applications listed in the above.

Storage condition

(1) Products should be used in 6 months from the day of WALSIN outgoing inspection.
(2) Storage environment condition.

- Products should be storage in the warehouse on the following conditions.
- Temperature : +5 to +40℃
- Humidity : 30 to 70% relative humidity
- Don't keep products in corrosive gases such as sulfur. Chlorine gas or acid or it may cause oxidization of electrode, resulting in poor solderability.
- Products should be storage on the palette for the prevention of the influence from humidity, dust and son on.
- Products should be storage in the warehouse without heat shock, vibration, direct sunlight and so on.
- Products should be storage under the airtight packaged condition.