# TEST REPORT

**FCC ID: 2AMY3-8T9-422L**

**Product: Tablet PC**

**Model No.: Acer One 8 T9-422L**

**Trade Mark: Acer**

**Report No.: WSCT-A2LA-R&E230300002A-15B**

**Issued Date: 13 April 2023**

Issued for:

**Acer India Pvt Ltd.**
**Embassy Heights 6th Floor, No. 13, Magrath Road, (Next to Hosmat Hospital), Bangalore-560 025, India.**

Issued By:

**World Standardization Certification & Testing Group(Shenzhen) Co.,Ltd.**
**Building A-B, Baoshi Science & Technology Park, Baoshi Road, Bao'an District, Shenzhen, Guangdong, China**
**TEL: +86-755-26996192**
**FAX: +86-755-86376605**

***Note:*** *The results contained in this report pertain only to the tested sample. This report shall not be reproduced, except in full, without written approval of World Standardization Certification & Testing Group(Shenzhen) Co., Ltd. This report must not be used by the client to claim product certification, approval, or any agency of the U.S. Government.*

# TABLE OF CONTENTS

1. Test Certification ..... 3
2. GENERAL DESCRIPTION OF EUT ..... 4
3. Test Result Summary ..... 5
4. TEST METHODOLOGY ..... 6
4.1. CONFIGURATION OF SYSTEM UNDER TEST ..... 7
4.2. DESCRIPTION OF SUPPORT UNITS (CONDUCTED MODE) ..... 8
5. MEASUREMENT INSTRUMENTS ..... 9
6. Facilities and Accreditations ..... 10
6.1. FACILITIES ..... 10
6.2. ACCREDITATIONS ..... 10
6.3. MEASUREMENT UNCERTAINTY ..... 11
7. EMC EMISSION TEST ..... 12
7.1. CONDUCTED EMISSION MEASUREMENT ..... 12
7.2. RADIATED EMISSION MEASUREMENT ..... 16

# 1. Test Certification

| | |
|---|---|
| **Product:** | Tablet PC |
| **Model No.:** | Acer One 8 T9-422L |
| **Trade Mark:** | Acer |
| **Applicant:** | **Acer India Pvt Ltd.** |
| **Address:** | Embassy Heights 6th Floor, No. 13, Magrath Road, (Next to Hosmat Hospital), Bangalore-560 025, India. |
| **Manufacturer:** | **Acer India Pvt Ltd.** |
| **Address:** | Embassy Heights 6th Floor, No. 13, Magrath Road, (Next to Hosmat Hospital), Bangalore-560 025, India. |
| **Factory:** | **Acer India Pvt Ltd.** |
| **Address:** | RS No. 38/2, Sedarapet Village, Villianur Commune, Pondicherry – 605111. |
| **Date of Test:** | 12 January 2023 to 15 March 2023 |
| **Applicable Standards:** | FCC CFR Title 47 Part 15 Subpart B |

*The above equipment has been tested by World Standardization Certification & Testing Group(Shenzhen) Co., Ltd. and found compliance with the requirements set forth in the technical standards mentioned above. The results of testing in this report apply only to the product/system, which was tested. Other similar equipment will not necessarily produce the same results due to production tolerance and measurement uncertainties.*

***Tested By:*** Wang Xiang
***(Wang Xiang)***

***Checked By:*** Qin Shuiquan
***( Qin Shuiquan)***

***Approved By:*** Liu Fuxin
***( Liu Fuxin)***

***Date:*** 13 April 2023

# 2. GENERAL DESCRIPTION OF EUT

| | |
|---|---|
| **Equipment Type:** | Tablet PC |
| **Test Model:** | Acer One 8 T9-422L |
| **Trade Mark** | Acer |
| **Rechargeable Li-Polymer Battery:** | Model: GFL 1100100 1ICP4/100/100<br>Nominal Voltage: 3.8V<br>Rated capacity: 5100mAh/19.38Wh<br>Limited Charge Voltage: 4.35V |
| **Adapter:** | Model: BSY01J3050200UU<br>Input: 100-240V~50/60Hz 0.3A<br>Output:5.0V⎓2.0A 10.0W |
| **Remark:** | N/A. |

# 3. Test Result Summary

| Requirement | CFR 47 Section | Result |
|---|---|---|
| CONDUCTED EMISSION | §15.107 | PASS |
| RADIATED EMISSION | §15.109 | PASS |

***Note:***

*1. PASS: Test item meets the requirement.*

*2. Fail: Test item does not meet the requirement.*

*3. N/A: Test case does not apply to the test object.*

*4. The test result judgment is decided by the limit of test standard.*

# 4. TEST METHODOLOGY

To investigate the maximum EMI emission characteristics generates from EUT, the test system was pre-scanning tested base on the consideration of following EUT operation mode or test configuration mode which possible have effect on EMI emission level. Each of these EUT operation mode(s) or test configuration mode(s) mentioned above was evaluated respectively.

| Pretest Mode | Description |
|---|---|
| Mode 1 | Video Recording |
| Model 2 | Video Playing |
| Mode 3 | Transferring with USB Disk (the worst case) |

## 4.1. CONFIGURATION OF SYSTEM UNDER TEST

Mode 1&2

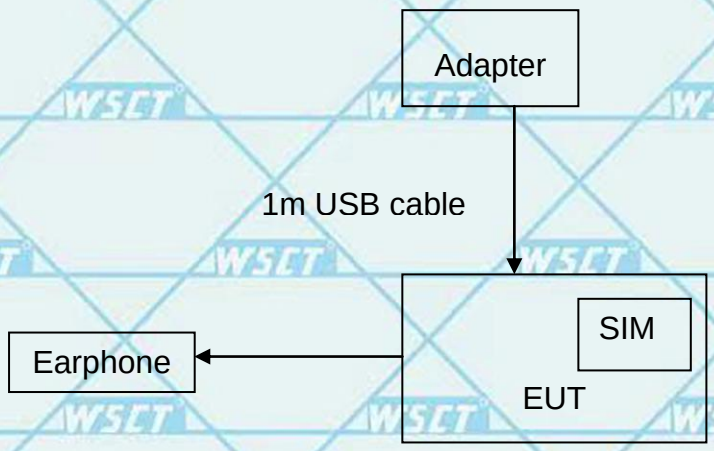


Mode 3:

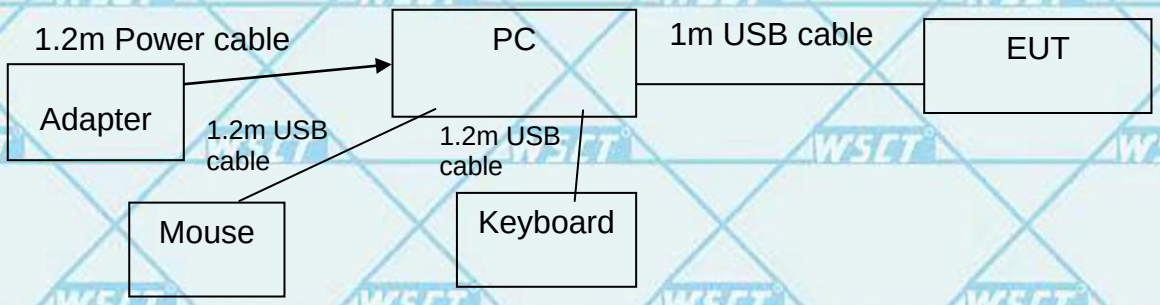


(EUT: Tablet PC)

| I/O Port of EUT | | | |
|---|---|---|---|
| **I/O Port Type** | **Q'TY** | **Cable** | **Tested with** |
| Power | 1 | 1m USB cable, unshielded | 1 |
| Earphone | 1 | 1m USB cable, unshielded | 1 |

## 4.2. DESCRIPTION OF SUPPORT UNITS (CONDUCTED MODE)

The EUT has been tested as an independent unit together with other necessary accessories or support units. The following support units or accessories were used to form a representative test configuration during the tests.

| Item | Equipment | Mfr/Brand | Model/Type No. | Series No. | Note |
|---|---|---|---|---|---|
| 1 | Adapter | / | BSY01J3050200UU | / | / |
| 2 | Keyboard | HP | SK-2880 | 435302-AA- | / |
| 3 | Mouse | DELL | MS111-1 | / | / |

**Note:**

**(1) The support equipment was authorized by Declaration of Confirmation.**

**(2) For detachable type I/O cable should be specified the length in cm in『Length』column.**

# 5. MEASUREMENT INSTRUMENTS

| Kind of Equipment | Manufacturer | Type No. | Serial No. | Last Calibrated | Calibrated until |
|---|---|---|---|---|---|
| Test software | -- | EZ-EMC | CON-03A | -- | -- |
| ESCI Test Receiver | R&S | ESCI | 100005 | 11/05/2022 | 11/04/2023 |
| LISN | AFJ | LS16 | 16010222119 | 11/05/2022 | 11/04/2023 |
| LISN(EUT) | Mestec | AN3016 | 04/10040 | 11/05/2022 | 11/04/2023 |
| pre-amplifier | CDSI | PAP-1G18-38 | -- | 11/05/2022 | 11/04/2023 |
| System Controller | CT | SC100 | - | 11/05/2022 | 11/04/2023 |
| Bi-log Antenna | Chase | CBL6111C | 2576 | 11/05/2022 | 11/04/2023 |
| Spectrum analyzer | R&S | FSU26 | 200409 | 11/05/2022 | 11/04/2023 |
| Horn Antenna | SCHWARZBECK | 9120D | 1141 | 11/05/2022 | 11/04/2023 |
| Bi-log Antenna | SCHWAREBECK | VULB9163 | 9163/340 | 11/05/2022 | 11/04/2023 |
| Pre Amplifier | H.P. | HP8447E | 2945A02715 | 11/05/2022 | 11/04/2023 |
| 9*6*6 Anechoic | -- | -- | -- | 11/05/2022 | 11/04/2023 |

# 6. Facilities and Accreditations

## 6.1. Facilities

All measurement facilities used to collect the measurement data are located at **Building A-B, Baoshi Science & Technology Park, Baoshi Road, Bao'an District, Shenzhen, Guangdong, China of the World Standardization Certification & Testing Group(Shenzhen) CO., LTD**

The sites are constructed in conformance with the requirements of ANSI C63.4 and CISPR Publication 22. All receiving equipment conforms to CISPR Publication 16-1, "Radio Interference Measuring Apparatus and Measurement Methods."

## 6.2. ACCREDITATIONS

**CNAS - Registration Number: L3732**

China National Accreditation Service for Conformity Assessment, The test firm Registration Number: L3732

**FCC - Designation Number: CN1303**

World Standardization Certification & Testing Group(Shenzhen) CO., LTD. has been accredited as a testing laboratory by FCC(Federal Communications Commission). The test firm Designation Number: CN1303.

**A2LA - Certificate Number: 5768.01**

The EMC Laboratory has been accredited by the American Association for Laboratory Accreditation (A2LA).Certification Number: 5768.01

## 6.3. Measurement Uncertainty

The reported uncertainty of measurement y ± U, where expended uncertainty U is based on a standard uncertainty multiplied by a coverage factor of k=2, providing a level of confidence of approximately 95 %.

| No. | Item | MU |
|---|---|---|
| 1 | Conducted Emission Test | ±3.2dB |
| 2 | RF power, conducted | ±0.16dB |
| 3 | Spurious emissions, conducted | ±0.21dB |
| 4 | All emissions, radiated(<1GHz) | ±4.7dB |
| 5 | All emissions, radiated(>1GHz) | ±4.7dB |
| 6 | Temperature | ±0.5°C |
| 7 | Humidity | ±2.0% |

# 7. EMC EMISSION TEST

## 7.1. CONDUCTED EMISSION MEASUREMENT

### 7.1.1. POWER LINE CONDUCTED EMISSION LIMITS

| FREQUENCY (MHz) | Class A (dBuV) | | Class B (dBuV) | | Standard |
|---|---|---|---|---|---|
| | Quasi-peak | Average | Quasi-peak | Average | |
| 0.15 -0.5 | 79.00 | 66.00 | 66 - 56 * | 56 - 46 * | FCC |
| 0.50 -5.0 | 73.00 | 60.00 | 56.00 | 46.00 | FCC |
| 5.0 -30.0 | 73.00 | 60.00 | 60.00 | 50.00 | FCC |

Note:

(1) The tighter limit applies at the band edges.

(2) The limit of " * " marked band means the limitation decreases linearly with the logarithm of the frequency in the range.

The following table is the setting of the receiver

| Receiver Parameters | Setting |
|---|---|
| Attenuation | 10 dB |
| Start Frequency | 0.15 MHz |
| Stop Frequency | 30 MHz |
| IF Bandwidth | 9 kHz |

## TEST PROCEDURE

a. The EUT was placed 0.4 meters from the horizontal ground plane with EUT being connected to the power mains through a line impedance stabilization network (LISN). All other support equipments powered from additional LISN(s). The LISN provide 50 Ohm/ 50uH of coupling impedance for the measuring instrument.

b. Interconnecting cables that hang closer than 40 cm to the ground plane shall be folded back and forth in the center forming a bundle 30 to 40 cm long.

c. I/O cables that are not connected to a peripheral shall be bundled in the center. The end of the cable may be terminated, if required, using the correct terminating impedance. The overall length shall not exceed 1 m.

d. LISN at least 80 cm from nearest part of EUT chassis.

e. For the actual test configuration, please refer to the related Item –EUT Test Photos.

## TEST SETUP

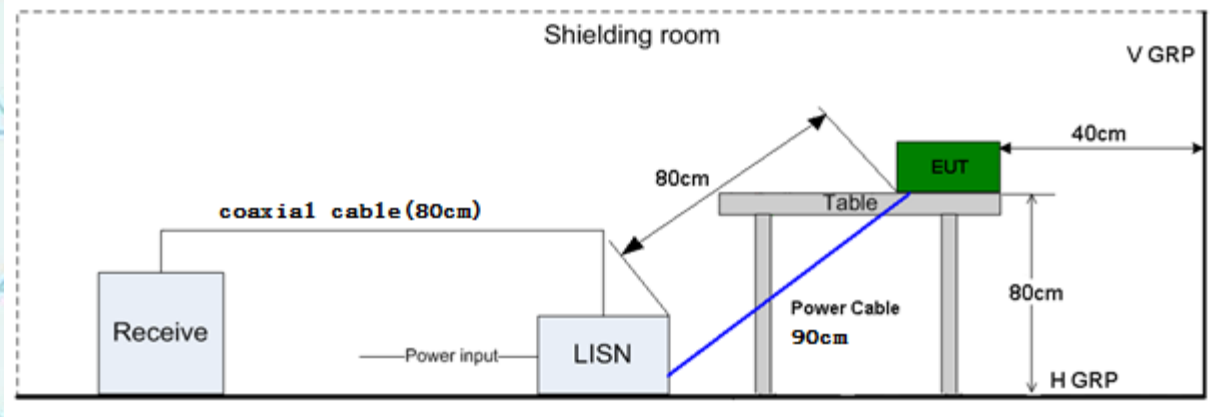

### 7.1.2. Test Results

| | | | |
|---|---|---|---|
| Temperature | 20 ℃ | Relative Humidity | 48% |
| Pressure | 1010 hPa | Test Mode | Mode 3(the worst case) |

**Conducted Emission on Line Terminal of the power line (150 kHz to 30MHz)**

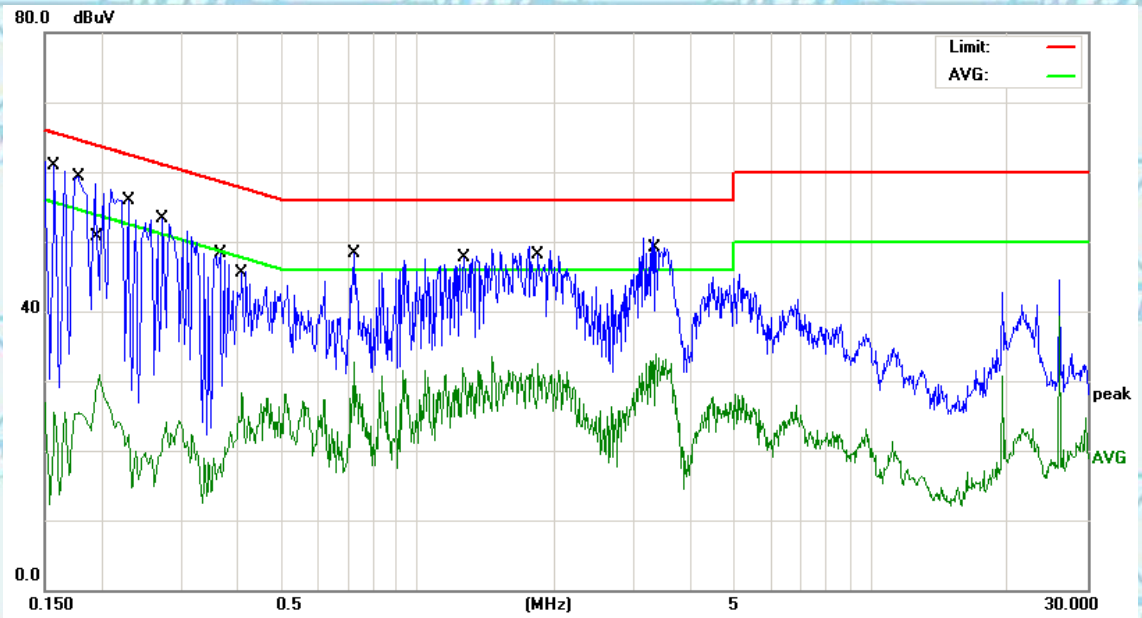


| No. | Mk. | Freq. | Reading Level | Correct Factor | Measure-ment | Limit | Over | |
|---|---|---|---|---|---|---|---|---|
| | | MHz | dBuV | dB | dBuV | dBuV | dB | Detector |
| 1 | * | 0.1580 | 50.51 | 10.41 | 60.92 | 65.56 | -4.64 | QP |
| 2 | | 0.1780 | 48.87 | 10.41 | 59.28 | 64.57 | -5.29 | QP |
| 3 | | 0.1980 | 20.41 | 10.41 | 30.82 | 53.69 | -22.87 | AVG |
| 4 | | 0.2300 | 45.43 | 10.42 | 55.85 | 62.45 | -6.60 | QP |
| 5 | | 0.2740 | 42.94 | 10.42 | 53.36 | 60.99 | -7.63 | QP |
| 6 | | 0.3660 | 37.93 | 10.44 | 48.37 | 58.59 | -10.22 | QP |
| 7 | | 0.4100 | 17.90 | 10.45 | 28.35 | 47.65 | -19.30 | AVG |
| 8 | | 0.7260 | 37.86 | 10.49 | 48.35 | 56.00 | -7.65 | QP |
| 9 | | 0.7260 | 22.25 | 10.49 | 32.74 | 46.00 | -13.26 | AVG |
| 10 | | 1.2500 | 21.28 | 10.55 | 31.83 | 46.00 | -14.17 | AVG |
| 11 | | 1.8460 | 21.88 | 10.64 | 32.52 | 46.00 | -13.48 | AVG |
| 12 | | 3.3460 | 23.31 | 10.67 | 33.98 | 46.00 | -12.02 | AVG |

## Conducted Emission on Neutral Terminal of the power line (150 kHz to 30MHz)

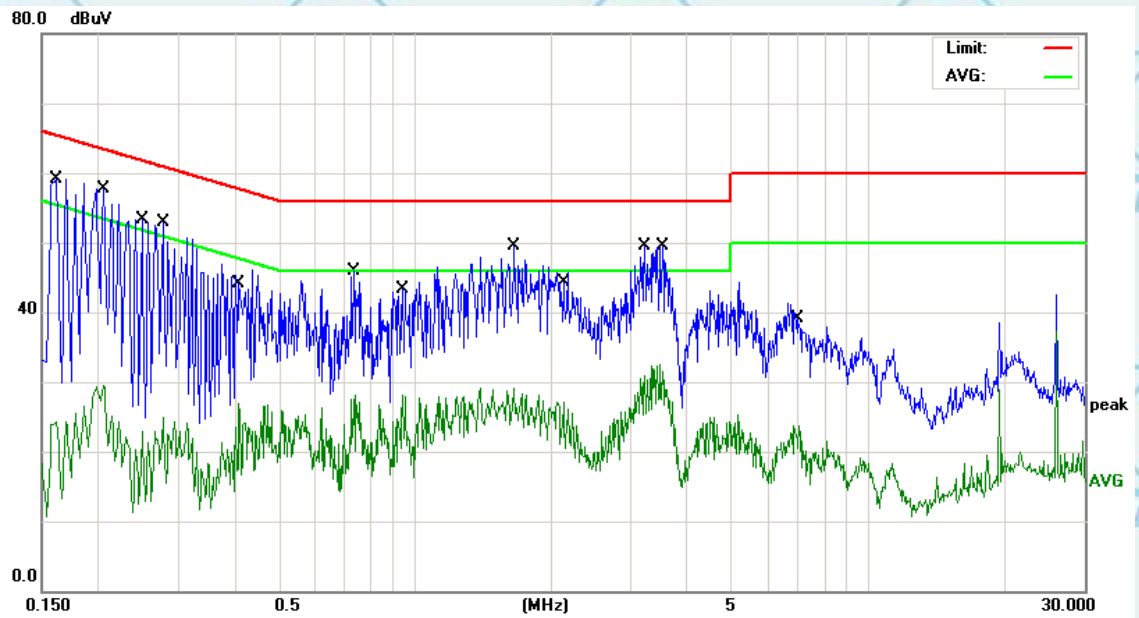


| No. | Mk. | Freq. | Reading Level | Correct Factor | Measure-ment | Limit | Over | |
|---|---|---|---|---|---|---|---|---|
| | | MHz | dBuV | dB | dBuV | dBuV | dB | Detector |
| 1 | * | 0.1620 | 48.67 | 10.41 | 59.08 | 65.36 | -6.28 | QP |
| 2 | | 0.2060 | 19.03 | 10.41 | 29.44 | 53.36 | -23.92 | AVG |
| 3 | | 0.2500 | 42.92 | 10.42 | 53.34 | 61.75 | -8.41 | QP |
| 4 | | 0.2779 | 42.38 | 10.43 | 52.81 | 60.88 | -8.07 | QP |
| 5 | | 0.4100 | 16.41 | 10.45 | 26.86 | 47.65 | -20.79 | AVG |
| 6 | | 0.7340 | 35.34 | 10.49 | 45.83 | 56.00 | -10.17 | QP |
| 7 | | 0.9420 | 17.49 | 10.51 | 28.00 | 46.00 | -18.00 | AVG |
| 8 | | 1.6540 | 38.81 | 10.61 | 49.42 | 56.00 | -6.58 | QP |
| 9 | | 2.1300 | 16.45 | 10.66 | 27.11 | 46.00 | -18.89 | AVG |
| 10 | | 3.2139 | 38.83 | 10.67 | 49.50 | 56.00 | -6.50 | QP |
| 11 | | 3.4740 | 21.88 | 10.67 | 32.55 | 46.00 | -13.45 | AVG |
| 12 | | 7.0340 | 12.96 | 10.73 | 23.69 | 50.00 | -26.31 | AVG |

***Note1:***

*Freq. = Emission frequency in MHz*
*Reading level (dBμV) = Receiver reading*
*Corr. Factor (dB) = Antenna factor + Cable loss*
*Measurement (dBμV) = Reading level (dBμV) + Corr. Factor (dB)*
*Limit (dBμV) = Limit stated in standard*
*Margin (dB) = Measurement (dBμV) – Limits (dBμV)*
*Q.P. =Quasi-Peak AVG =average*
** is meaning the worst frequency has been tested in the frequency range 150 kHz to 30MHz.*

## 7.2. RADIATED EMISSION MEASUREMENT

### 7.2.1. Radiated Emission Limits

The field strength of radiated emissions from unintentional radiators at a distance of 3 meters shall not exceed the following values:

| Frequencies (MHz) | Field Strength (micorvolts/meter) | Measurement Distance (meters) |
|---|---|---|
| 0.009~0.490 | 2400/F(KHz) | 300 |
| 0.490~1.705 | 24000/F(KHz) | 30 |
| 1.705~30.0 | 30 | 30 |
| 30~88 | 100 | 3 |
| 88~216 | 150 | 3 |
| 216~960 | 200 | 3 |
| Above 960 | 500 | 3 |

LIMITS OF RADIATED EMISSION MEASUREMENT (Above 1000MHz)

| FREQUENCY (MHz) | Limit (dBuV/m) (at 3M) | |
|---|---|---|
| | PEAK | AVERAGE |
| Above 1000 | 74 | 54 |

Notes:

(1) The limit for radiated test was performed according to FCC PART 15B.
(2) The tighter limit applies at the band edges.
(3) Emission level (dBuV/m)=20log Emission level (uV/m).

| Spectrum Parameter | Setting |
|---|---|
| Attenuation | Auto |
| Start Frequency | 1000 MHz |
| Stop Frequency | 10th carrier harmonic |
| RB / VB (emission in restricted band) | 1 MHz / 1 MHz for Peak, 1 MHz / 1Hz for Average |

| Receiver Parameter | Setting |
|---|---|
| Attenuation | Auto |
| Start ~ Stop Frequency | 9kHz~150kHz / RB 200Hz for QP |
| Start ~ Stop Frequency | 150kHz~30MHz / RB 9kHz for QP |
| Start ~ Stop Frequency | 30MHz~1000MHz / RB 120kHz for QP |

## TEST PROCEDURE

a. The measuring distance of at 3 m shall be used for measurements at frequency up to 1GHz. For frequencies above 1GHz, any suitable measuring distance may be used.
b. The EUT was placed on the top of a rotating table 0.8 meters above the ground at a 3 meter open area test site. The table was rotated 360 degrees to determine the position of the highest radiation.
c. The height of the equipment or of the substitution antenna shall be 0.8 m; the height of the test antenna shall vary between 1 m to 4 m. Both horizontal and vertical polarizations of the antenna are set to make the measurement.
d. The initial step in collecting conducted emission data is a spectrum analyzer peak detector mode pre-scanning the measurement frequency range. Significant peaks are then marked and then Quasi Peak detector mode re-measured.
e. If the Peak Mode measured value compliance with and lower than Quasi Peak Mode Limit, the EUT shall be deemed to meet QP Limits and then no additional QP Mode measurement performed.
f. For the actual test configuration, please refer to the related Item –EUT Test Photos.

## TEST SETUP

（A）Radiated Emission Test-Up Frequency 30MHz~1GHz

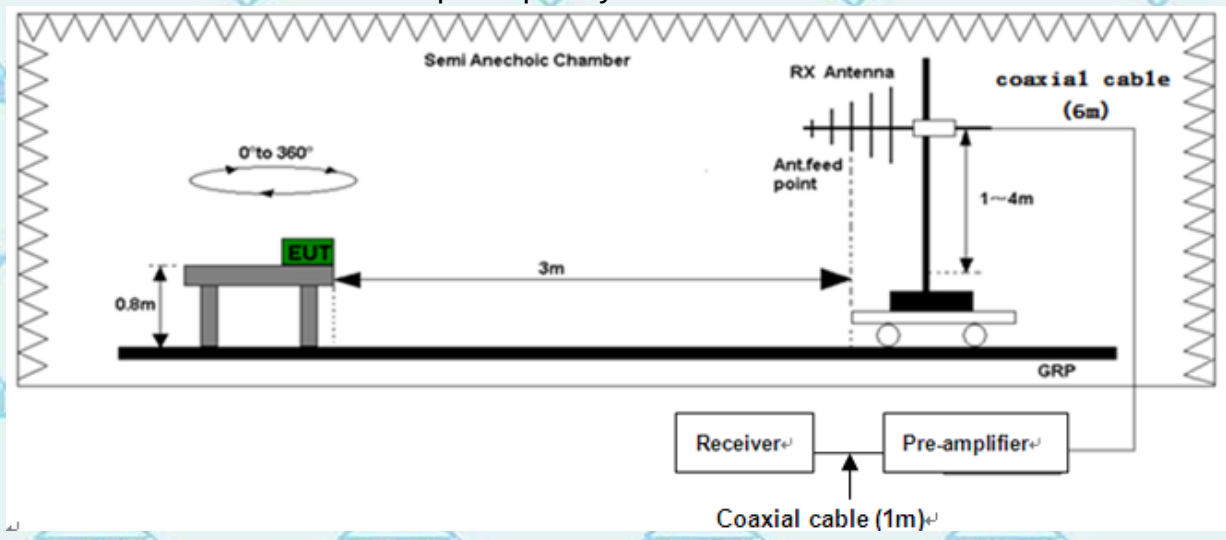


（B）Radiated Emission Test-Up Frequency Above 1GHz

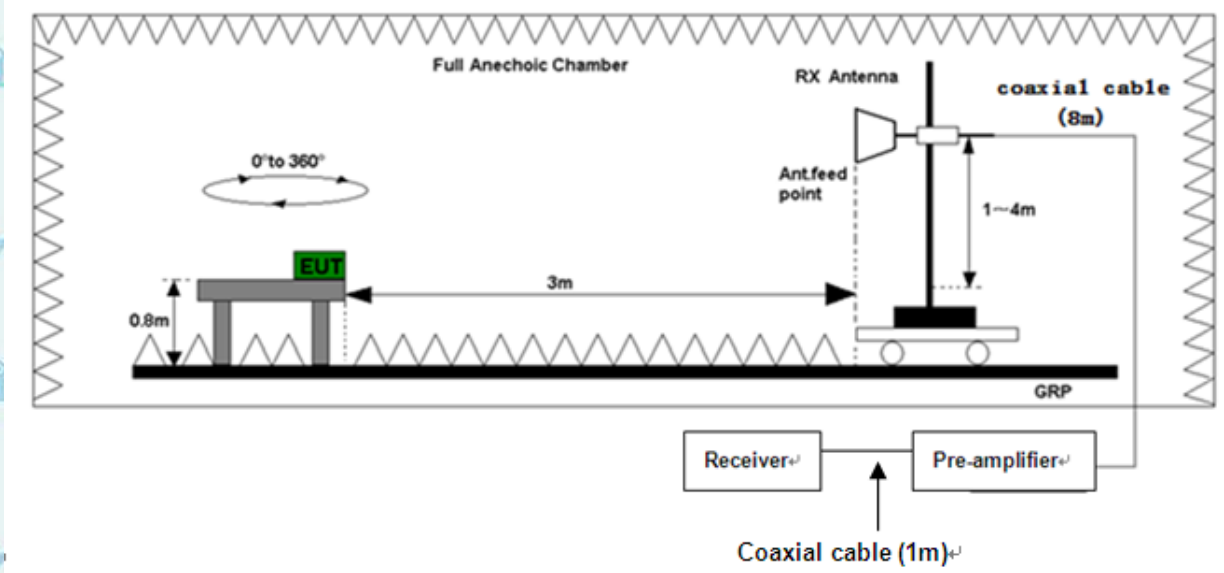

### 7.2.2. Test Results

| | | | |
|---|---|---|---|
| Temperature | 20 ℃ | Relative Humidity | 48% |
| Pressure | 1010 hPa | Test Mode | Mode 3(the worst case) |

**Please refer to following diagram for individual**

**Below 1GHz**

Horizontal:

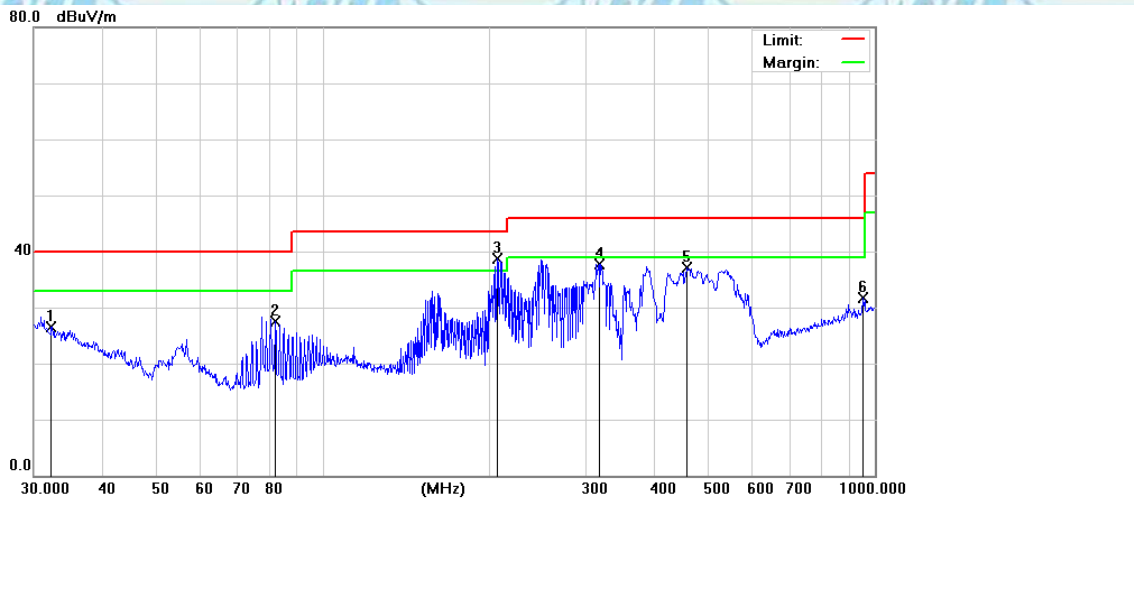


| No. | Mk. | Freq. | Reading Level | Correct Factor | Measure-ment | Limit | Over | |
|---|---|---|---|---|---|---|---|---|
| | | MHz | dBuV | dB | dBuV/m | dBuV/m | dB | Detector |
| 1 | | 32.2925 | 22.57 | 3.91 | 26.48 | 40.00 | -13.52 | QP |
| 2 | | 82.0706 | 34.34 | -6.91 | 27.43 | 40.00 | -12.57 | QP |
| 3 | * | 207.1226 | 45.44 | -6.68 | 38.76 | 43.50 | -4.74 | QP |
| 4 | | 316.5890 | 39.79 | -2.04 | 37.75 | 46.00 | -8.25 | QP |
| 5 | | 457.5073 | 37.02 | 0.06 | 37.08 | 46.00 | -8.92 | QP |
| 6 | | 952.0937 | 25.32 | 6.45 | 31.77 | 46.00 | -14.23 | QP |

Vertical:

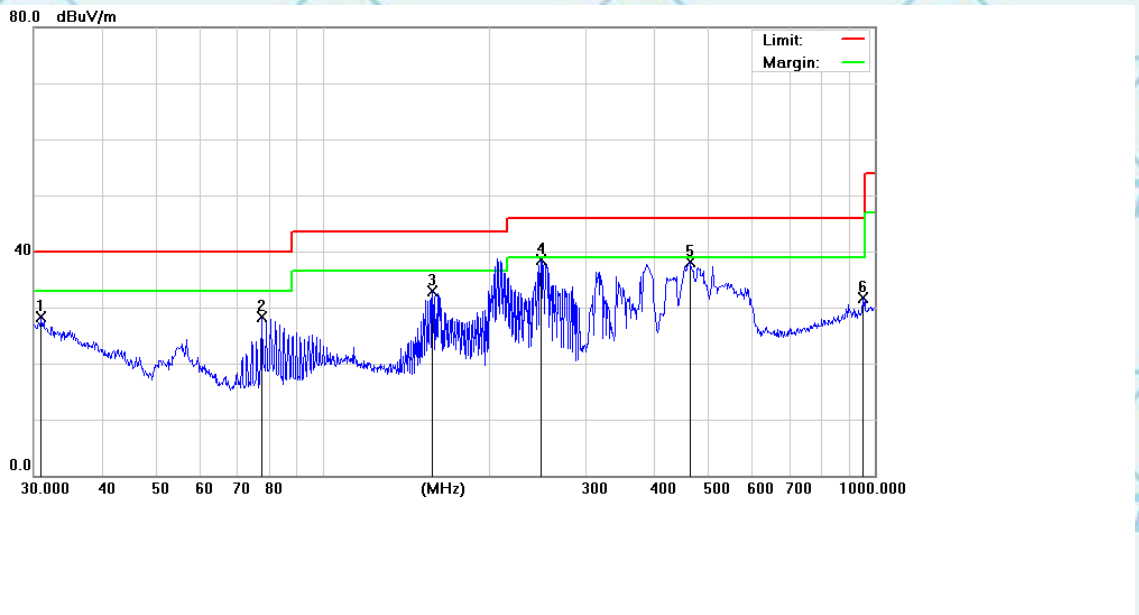


| No. | Mk. | Freq. | Reading Level | Correct Factor | Measure-ment | Limit | Over | |
|---|---|---|---|---|---|---|---|---|
| | | MHz | dBuV | dB | dBuV/m | dBuV/m | dB | Detector |
| 1 | | 30.9619 | 23.94 | 4.43 | 28.37 | 40.00 | -11.63 | QP |
| 2 | | 77.5928 | 35.39 | -7.14 | 28.25 | 40.00 | -11.75 | QP |
| 3 | | 158.1123 | 38.49 | -5.63 | 32.86 | 43.50 | -10.64 | QP |
| 4 | * | 248.5519 | 43.38 | -4.79 | 38.59 | 46.00 | -7.41 | QP |
| 5 | | 462.3455 | 38.01 | 0.08 | 38.09 | 46.00 | -7.91 | QP |
| 6 | | 952.0937 | 25.32 | 6.45 | 31.77 | 46.00 | -14.23 | QP |

Note1:
Freq. = Emission frequency in MHz
Reading level (dBµV) = Receiver reading
Corr. Factor (dB) = Antenna factor + Cable loss - Amplifier factor.
Measurement (dBµV) = Reading level (dBµV) + Corr. Factor (dB)
Limit (dBµV) = Limit stated in standard
Margin (dB) = Measurement (dBµV) – Limits (dBµV)

**TEST RESULTS**

Above 1GHz(1~26GHz) :( Mode 3—worst case)

| Freq. (MHz) | Ant. Pol. | Emission Level(dBuV) | | Limit 3m(dBuV/m) | | Over(dB) | |
|---|---|---|---|---|---|---|---|
| | H/V | PK | AV | PK | AV | PK | AV |
| 1552.35 | V | 65.45 | 40.75 | 74 | 54 | -8.55 | -13.25 |
| 2399.95 | V | 61.35 | 39.58 | 74 | 54 | -12.65 | -14.42 |
| 1614.23 | H | 59.44 | 40.45 | 74 | 54 | -14.56 | -13.55 |
| 2333.72 | H | 59.47 | 40.47 | 74 | 54 | -14.53 | -13.53 |

Remark:
All emissions not reported were more than 20dB below the specified limit or in the noise floor.
Freq. = Emission frequency in MHz
Factor = Antenna Factor + Cable Loss – Pre-amplifier.
Over= Emission Level - Limit.
All the x/y/z orientation has been investigated, and only worst case is presented in this report.

********END OF REPORT********