Solar Robotic Pool Skimmer

HVIN: LU-ASKIM

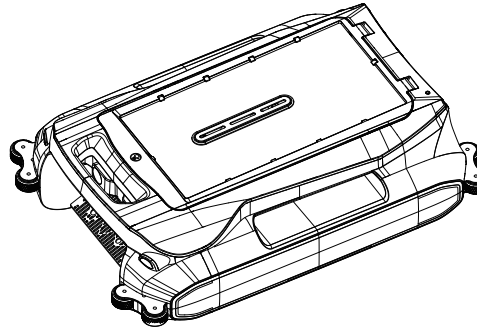

User Manual

(Note: Please read this manual carefully before use to avoid danger or damage to the product due to improper operation)

FCC STATEMENT :

This device complies with Part 15 of the FCC Rules. Operation is subject to the following two conditions:
(1) This device may not cause harmful interference, and
(2) This device must accept any interference received, including interference that may cause undesired operation.
Warning: Changes or modifications not expressly approved by the party responsible for compliance could void the user's authority to operate the equipment.

NOTE: This equipment has been tested and found to comply with the limits for a Class B digital device, pursuant to Part 15 of the FCC Rules. These limits are designed to provide reasonable protection against harmful interference in a residential installation. This equipment generates uses and can radiate radio frequency energy and, if not installed and used in accordance with the instructions, may cause harmful interference to radio communications. However, there is no guarantee that interference will not occur in a particular installation. If this equipment does cause harmful interference to radio or television reception, which can be determined by turning the equipment off and on, the user is encouraged to try to correct the interference by one or more of the following measures:

Reorient or relocate the receiving antenna.

Increase the separation between the equipment and receiver.

Connect the equipment into an outlet on a circuit different from that to which the receiver is connected.

Consult the dealer or an experienced radio/TV technician for help.

FCC Radiation Exposure Statement:

This equipment complies with FCC radiation exposure limits set forth for an uncontrolled environment. This equipment should be installed and operated with minimum distance 20cm between the radiator & your body.

catalogue

1. Safety statement

2. Product description

2.1 Part name

2.2 Product parameter

3. Instructions for use

3.1 Operation guide

3.2 APP connection

3.3 Product maintenance

4. Common Faults

5. Replaceable modules

Safety statement

Please read the following safety instructions and follow all usual safety precautions before using this product

Please read this manual carefully and keep this manual

Any operation inconsistent with this instruction manual may cause damage to the product

Host and accessories related safety precautions

⚠ warn

01. Do not disassemble, repair or modify the machine yourself, otherwise it will damage the product and cause danger.
02. Do not use this product in an environment where there is a possibility of fire or explosion.
03. Do not stand or sit on the product or it may cause damage to the product or fall.

ⓘ Look out

01. When the garbage basket is full, please empty the garbage before using the machine.
02. The use temperature range of this product is 0 degrees Celsius to 35 degrees Celsius, do not use in high or low temperature environment.
03. This appliance can be used by children aged from 8 years and above and persons with reduced physical, sensory or mental capabilities or lack of experience and knowledge if they have been given supervision or instruction concerning use of the appliance in a safe way and understand the hazards involved. Children shall not play with the appliance. Cleaning and user maintenance shall not be made by children without supervision.
04. Please remove the battery from the machine before scrapping the product. When removing the battery, please ensure that the product is not connected to the power supply.
05. The recycled batteries are centrally placed in the battery recycling bins or harmful garbage bins set up in communities, hotels, schools, large shopping malls, supermarkets, etc., and collected by professional recycling agencies. Waste product batteries must be removed and discarded in accordance with local laws and regulations.
06. If not used for a long time, please turn off the power switch and recharge regularly.
07. This appliance must only be supplied at safety extra low voltage corresponding to the marking on the appliance.
08. This appliance contains batteries that are only replaceable by skilled persons.
09. It is prohibited to use this machine in pools where the PH value is strong alkali or strong acid.
10. the pump must not be used when people are in the water.
11. Disconnect the pump from the supply mains before carrying out user maintenance such as cleaning the filter.

How to remove the battery

①Remove the 6 screws of the bottom cover and take off the bottom cover.
②Remove 52 screws of the left and right shell assembly and front shell assembly, then remove 8 screws of the motor assembly on both sides, and finally remove 12 screws of the battery assembly, the battery assembly is filled with sealant, you need to dial the sealant to unplug the link cable, and take out the battery assembly.

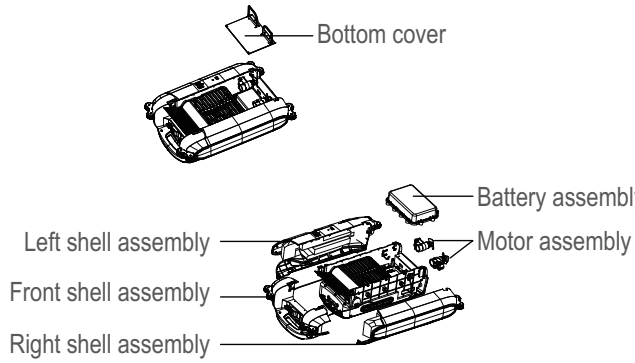

Product composition

2.1Part name

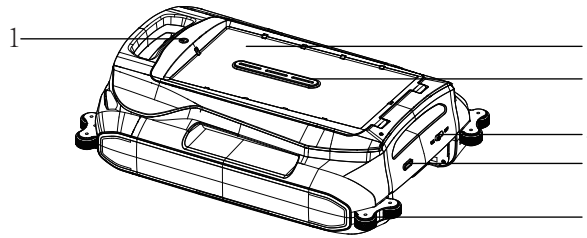

1.Flip open button	2.Solar panels	3.Trash basket detection port
4.Power switch	5.Rear LED light	6.Guide wheel

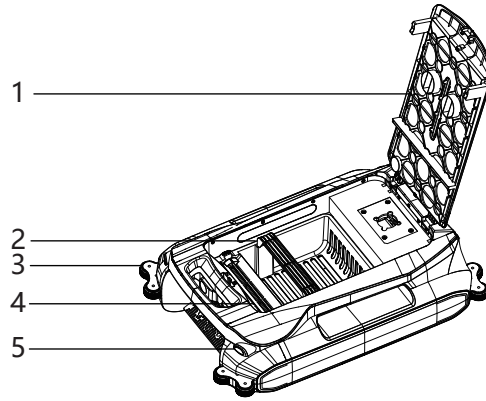

1.Fliptop	2.Trash basket	3.Guide wheel	4.impeller	5.Front LED light

Product composition

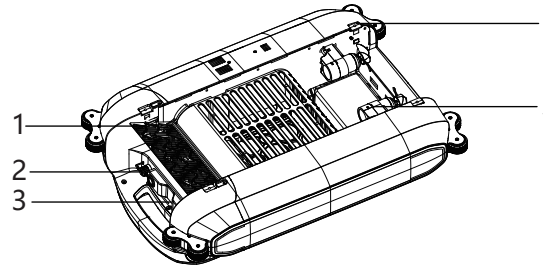

1.Garbage collection board
2.TYPE-C- charging port seal cover
3.Ultrasonic obstacle avoidance sensor
4.Anti-kara rod
5.Propeller motor

2.2Product parameters

Structure

Dimensions of the main unit	663*453*193mm
Net weight of the main unit	6kg

Electronic

Charging port input	5V ⎓ 2A
Rated power	3W
Rated voltage	7.2V ⎓
Battery rated capacity	4800mAh / 6000mAh
Typical battery capacity	5100mAh / 6400mAh
Type C charging time	5.5h

Accessory

Trash basket capacity	4.5L
Basket size	305*245*135mm

3.1Operational Guidelines

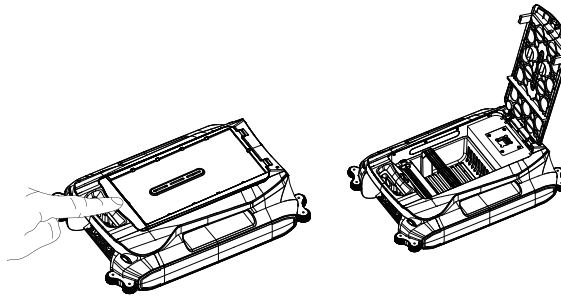

Press the flip open button before use to check that the trash basket is in place.

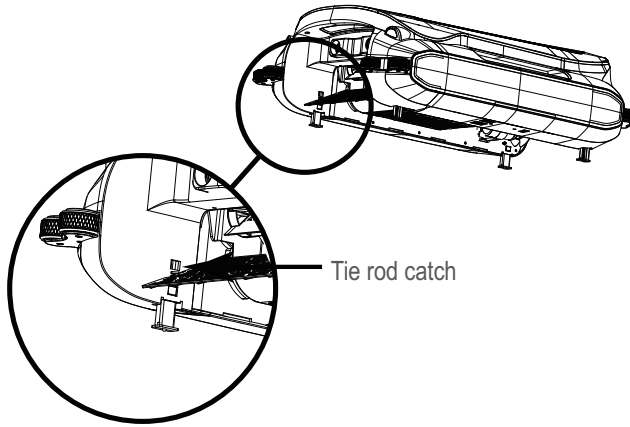

There is a boundary anti-kara rod around the bottom of the machine, if the water surface of the pool is close to the level of the pool shore, you need to press tie rod catch and pull out the tie rod.
The machine needs to be placed gently on the water. It should not be thrown or dropped as this will cause the machine's solar panels to pop off.

Instructions for use

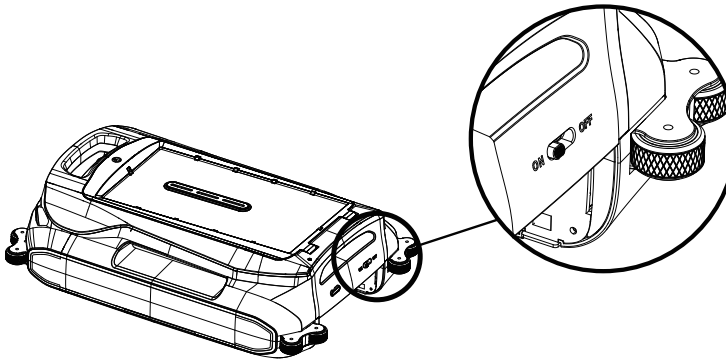

Turn on the power switch of the machine, the machine will turn on the green indicator light, and the machine will start to work forward automatically within 3 to 5 seconds. Automatically avoid turning when encountering obstacles ahead.
In the outdoor scene, when the power is less than 20%, the machine automatically finds the area with strong sunlight intensity, suspends the previous work for charging, and the machine will automatically continue to work when the power is charged to 30%.
When the ambient light intensity is insufficient, the machine defaults to night and will stop working to enter sleep mode. When the ambient light intensity is sufficient, the machine will automatically wake up and start working automatically.

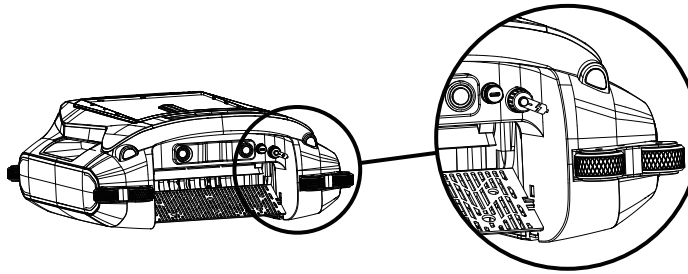

The machine works in an outdoor setting with 100% of its electricity coming from solar energy. In summer, the machine can be fully used for daytime work by converting solar energy into electricity. In the winter, the machine needs more time to charge, which will reduce the working time.
The machine works in indoor scenarios and needs to be charged with a 5V ⎓ 2A adapter. Before charging make sure that the machine Type C charging port is free of water stains, turn counterclockwise to open the charging cover, and connect the Type C charging cable. While charging,the machine will stop working. Please keep the power switch on during charging. After charging, be sure to tighten the charge cover clockwise.