KANDAO
看到 · 科技

Obsidian

Go Edition

3D VR Digital Camera

KanDao Obsidian
3D VR 全景相机(GO)
Product description
使用说明书

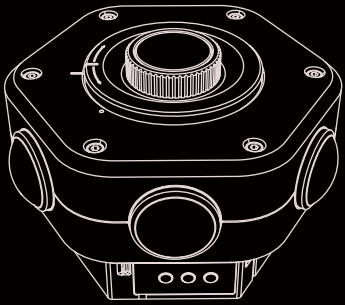

KanDao Obsidian Go
3D VR Digital Camera

中文产品说明

目录

一、部件介绍

1.1 3D VR 全景相机
1.2 相机规格参数
1.3 标准配件

二、入门指南

2.1 插入相机电池
2.2 插入存储卡
2.3 开启或关闭相机
2.4 使用相机拍照或录影

一、部件介绍

1.1 3D VR 全景相机

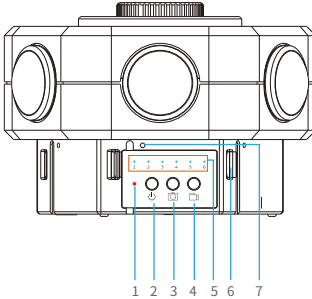

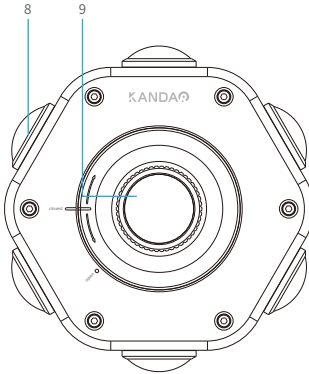

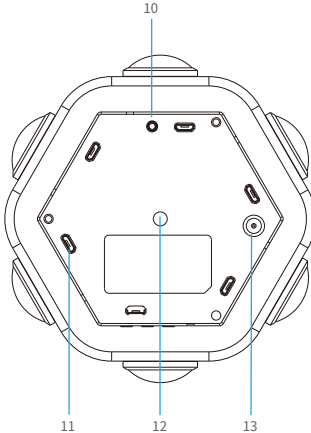

1. 电源指示灯
2. 电源键
3. 拍照键
4. 录像键
5. 工作状态指示灯
6. TF卡插座
7. 麦克风
8. 镜头
9. 电池室盖
10. Zoom收音接口
11. Micro USB接口
12. 三脚架快装板接口
13. 12V外接电源接口

1.2 相机规格参数

商品名称	参数或描述
视频格式	MOV
重量 (相机+电池)	1015 g
存储介质	TF卡, 最大支持128G
视频编码格式	H.264
输入电压	电池 7.4V, 外接电压12V
功率	10.5 W
视频分辨率	单镜头 1728 * 1728
图片分辨率	单镜头 4608 * 3456
帧率	30 fps
工作温度	-10 ~ 40 °C
工作湿度	10~90% RH
储存温度	-40 ~ 80 °C
储存湿度	5~90% RH
频率范围	2404MHz-2476MHz
最大辐射功率	遥控器2.5dBm 摄像头：2.5dBm
软件版本	MP_VER.01.00.13_20170830
硬件版本	主板:KSA_6_S206_V1.2 电源板:KSA_6_S206_POWER_V1.3

进口商

公司名称: Vrperception
地址: VR Perception Rebenstrasse 33
8307 Effretikon Switzerland

1.3 标准配件

名称	数量
手提箱	1个
遥控器	1个
遥控器电池	2节
珍珠棉	2个
音频线 0.7米	1条
说明书	1个
电源适配器赠品盒（赠品）	1个
电源适配器 12V 2A（赠品）	1个

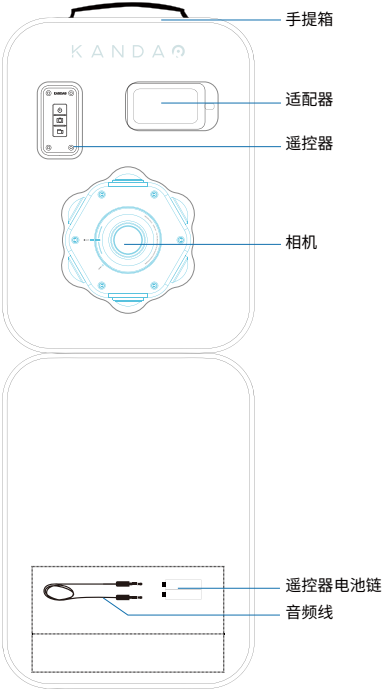
手提箱
KANDAO
适配器
遥控器
相机
遥控器电池链
音频线

二、入门指南

2.1 插入相机电池

向左拧[电池盖]即可打开盖子插入电池，向右拧紧关闭盖子。

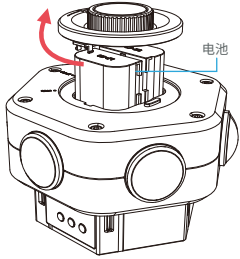

充电：相机电池电量耗尽后需将电池取出，用购买相机时所标配的电池充电器进行充电。

低电：
相机使用过程中电池电量低于10%时[电源指示灯]呈慢闪提示，当电量低于5%的时候，[电源指示灯]呈快闪提示。

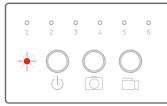

电池低电时电源
指示灯闪烁提示

2.2 插入存储卡

拍摄前请分别插入六张[TF存储卡]，插入时请确保存储卡方向正确，存储卡用于存储照片或视频。

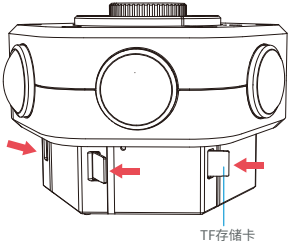

温馨提示：
TF卡请务必选择正规品牌商8G-128G，卡速class10及以上进行使用。

2.3 开启或关闭相机

开机：短按[电源键] 相机正常开启后，[电源指示灯]常亮红色，其它[工作指示灯]常亮蓝色。

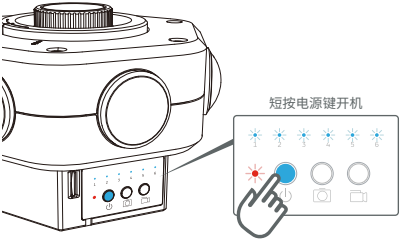

关机：长按[电源键]，相机关机后所有[指示灯]快闪后全灭。

2.4 使用相机拍照或录影

拍照：

短按[拍照键]即可拍照，拍照模式Timelapse10秒，拍照时[工作指示灯]会灭一下。

再次短按[拍照键]停止拍照。

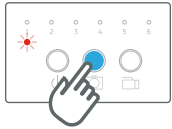

录影：

短按[录影键]即进行录影，再次短按[录影键]停止录影，开始录像时[工作指示灯]呈快闪提示约4秒同步信息后进行录影，录影过程中[工作指示灯]呈慢闪提示。

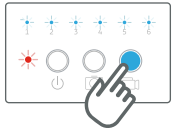

温馨提示:

相机无卡/卡满/录像同步时/不正常工作时蓝色的[工作指示灯]闪烁方式为快闪的方式。

Product Description

Table of Contents

1, Nomenclature

1.1 3D VR panorama camera
1.2 Camera specification parameters
1.3 Standard accessories

2, Using the camera

2.1 Battery charging
2.2 Insert the memory card
2.3 Switch on/off
2.4 Photograph & Video-record

Please read the product descripiton
carefully before using the device.

1, Nomenclature

1.1 3D VR panorama camera

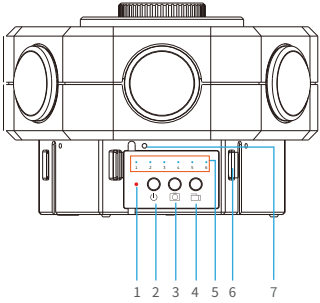

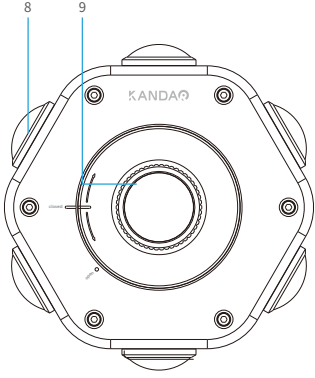

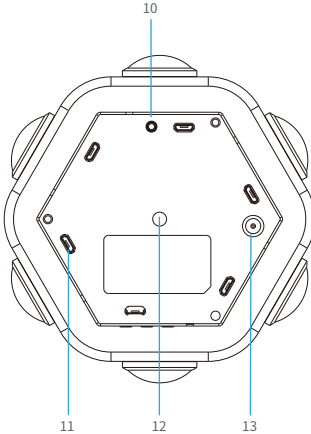

1. Power indicator lamp
2. Power button
3. Timelapse button
4. Camcorder button
5. Working mode lamp
6. TF card slot
7. Mic
8. Lens
9. Battery cover
10. Zoom audio port
11. Micro USB port
12. Tripod quick shoe
13. 12V external power supply port

1.2 Camera specification parameters

Name	Description
Video format	MOV
Weight（camera+battery）	1015 g
Memory medium	TF card
Video coding format	H.264
Power	10.5 W
Working voltage	battery 7.4V, adapter 12V
Video resolution	single lens 1728 * 1728
Photograph resolution	single lens 4608 * 3456
Frame rate	30 fps
Working temperature	-10 ~ 40 °C
Working humidity	10~90% RH
Storage temperature	-40 ~ 80 °C
Storage humidity	5~90% RH
Frequency range	2404MHz-2476MHz
E.I.R.P:	2.5dBm for remote control 2.5dBm for Camera
Software version	MP_VER.01.00.13_20170830
Hardware version	Mainboard：KSA_6_S206_V1.2 Power strip：KSA_6_S206_POWER_V1.3

Importers

Company Name: Vrperception
Address: VR Perception Rebenstrasse 33
8307 Effretikon Switzerland

1.3 Standard accessories

Name	Quantity
Carrying case	1
Remote control	1
Remote control battery	2
Pearl cotton	2
Donble-ended audio cable 0.7m	1
Instructions	1
Adapter gift box(gift)	1
Adapter 12V 2A (gift)	1

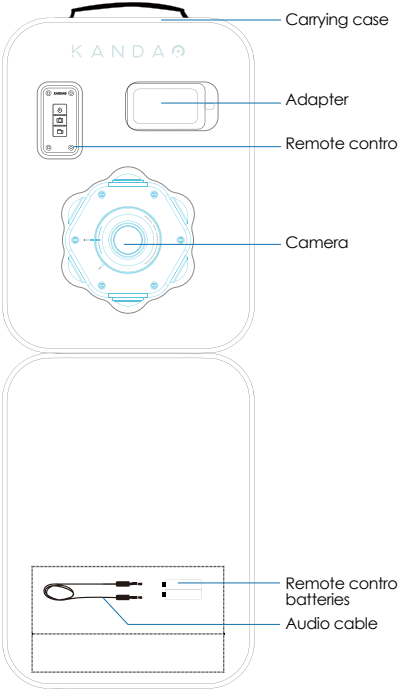
Carrying case
KANDAO
Adapter
Remote control
Camera
Remote control batteries
Audio cable

2, Using the camera

2.1 Charging

Rotate the battery cover clockwise to unload the batteries. Rotate anti-clockwise to seal the cover.

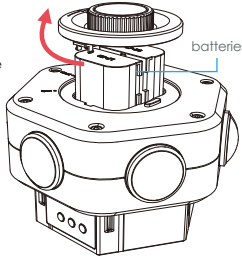

Power charge: When battery power is exhausted, charge the battery with the accessorized battery charger.

Low power: The [power indicator lamp] will flash slowly when power is below 10% and will flash quickly when power is below 5%.

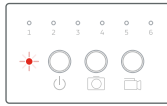

Power indicator lamp will flash when power is low

2.2 Insert the memory card

Please insert all six TF cards before shooting, make sure you insert from the right direction. The TF cards are used for data storage.

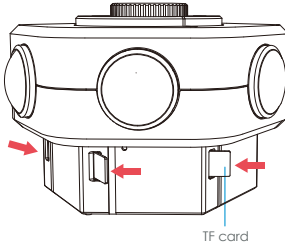

Reminder:
Please choose 8G-128G TF card of formal manufacture with an access speed class of above class10.

2.3 Switch on/off

Power on: Shortly press the [power button], if the camera is turned on normally, the power lamp will keep red, and the six [working mode lamps] will keep blue.

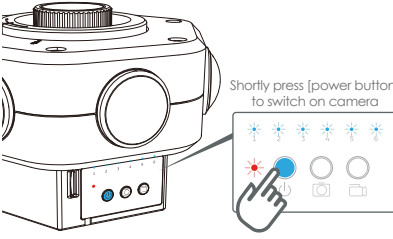

Power off: Long press [power button] all indictor lamps will be off when the camera is powered off.

2.4 Photograph & Video-record

Photograph: Shortly press the [Time-lapse button] to capture a photo. And the capture mode is 10-second time-lapse, shortly press [the time-lapse] again to end the capture. During the capture, the blue [working mode lamps] will twinkle once.

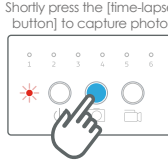

Video-record: Shortly press the [camcorder button] to record video. Shortly press the button again to stop recording.All [working mode lamps] will be in quick flashes for about 4 seconds, before the recording starts. During the recording process, [working mode lamps] will flash slowly.

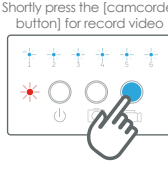

Notice: If camera has no TF-card / memory full / abnormal working status, the [working mode lamps] will flash quickly. During recording, the flash is slower.

FCC Special Statement

FCC Regulatory Information

Warning: changes or modifications not expressly approved by the party responsible for compliance could void the user's authority to operate the equipment.

Note: This equipment has been tested and found to comply with the limits for a Class B digital device, pursuant to Part 15 of the FCC Rules. These limits are designed to provide reasonable protection against harmful interference in a residential installation.
This equipment generates, uses and can radiate radio frequency energy and, if not installed and used in accordance with the instructions, may cause harmful interference to radio communications. However, there is no guarantee that interference will not occur in a particular installation.
If this equipment does cause harmful interference to radio or television reception, which can be determined by turning the equipment off and on, the user is encouraged to try to correct the interference by one or more of the following measures:
-- Reorient or relocate the receiving antenna.
-- Increase the separation between the equipment and receiver.
-- Connect the equipment into an outlet on a circuit different from that
to which the receiver is connected.
-- Consult the dealer or an experienced radio/TV technician for help.

RF Exposure

This equipment complies with FCC radiation exposure limits set forth for an uncontrolled environment. This equipment should be installed and operated with minimum distance 20cm between the radiator and your body.
This transmitter must not be co-located or operating in conjunction with any other antenna or transmitter.

FCC特别声明

FCC法规信息

警告：未遵守责任方明确批准的变更或修改可取消用户操作设备的权限。
注：本设备经检验符合《FCC规则》第15部分的规定，符合B级数字设备的限制。这些限制旨在为住宅安装中的有害干扰提供合理的保护。
该设备产生、使用会产生无线电射频，如果没有按照说明书安装和使用，可能会对无线电通信造成有害干扰。相反，也无法保证在特定的安装中一定不会产生干扰。
如果通过打开和关闭设备确认该设备确实对无线电或电视接收造成有害干扰，则鼓励用户通过以下一种或多种措施纠正干扰：
-调整接收天线的方向或位置。
-增加设备和接收器之间的分离。
-将设备连接到与接收器不同的电路插座上。
-咨询经销商或有经验的电台/电视技术人员寻求帮助。

辐射曝光

该设备符合FCC针对无控制环境的辐射曝光限值。
该设备应在散热器和人体之间距离大于20cm的条件下安装及操作。
此发射机不可与其他天线或发射机结合操作。

KANDAO

看到 · 科技

KanDao Technology's founders and core team members come from top universities all around the world such as the University of Hong Kong, Tsinghua University, Hong Kong University of Science and Technology, National University of Singapore and University of California, San Diego, with backgrounds in leading technology institutions such as Huawei, Tencent, Netease, CLP and other well-known enterprises. With strong research, development, and operational capabilities, Kandao sets a high international standard in the industry of panoramic virtual reality video making.

This device complies with Part 15 of the FCC Rules. Operation is subject to the following two conditions: (1) this device may not cause harmful interference, and (2) this device must accept any interference received, including interference that may cause undesired operation.

FCC ID: 2AMZV-KDOG

联系我们

GET MORE HELP (IF YOU NEED IT)

CALL +86-755-26411369
ADD: Unit 5D, Block M7, SinoSteel Building,
Nanshan, Shenzhen, China
深圳市南山区科文路9号中钢大厦
Email: service@kandaovr.com
WEB: www.kandaovr.com