Ruby S BL-R8189ME1 V1.2 SPEC

Ruby S

<V 1.0>

石头世纪科技有限公司 内部文档 未经允许请勿转发

Content

1. General Description 3
2. Product Model Information 3
3. WIFI Specification 3
   3.1 WIFI features 3
   3.2 WIFI RF Performance 4
   3.3 Block Diagram 5
   3.4 Dimension 5
   3.5 PIN Assignment 6
   3.6 Schematic 7
4. Antenna Specification 8
   4.1 Antenna lists 8
   4.2 Wireless LAN antenna matching circuit 9
   4.3 Antenna design requirements 9
5. FCC and IC Warning 10

roborock

1. General Description

The BL-R8189ME1 V1.2 is a highly integrated single-chip 802.11n Wireless LAN (WLAN) network SDIO interface (SDIO 1.1/ 2.0/ 3.0 compliant) controller. It is a WLAN MAC, a 1T1R capable WLAN baseband, and WLAN RF in a single chip. It provides a complete solution for a high throughput performance integrated wireless LAN device.

2. Product Model Information

Model Number	BL-R8189ME1 V1.2
FCC ID	2AN2O-RSW02
IC	23317-RSW02

3. WIFI Specification

3.1 WIFI features

a) Operate at ISM frequency Band (2.4GHz);

b) IEEE standards support, 802.11 b/g/n,;

c) Enterprise level security supporting: WEP 64bit&128bit, WPA, WPA2, WPA2-PSK and IEEE802.11i;

d) IEEE 802.11e QoS Enhancement(WMM);

e) Support 1 transmission and 1 receiving, transmission rate can up to 150Mbps (Physical Rate) in downstream and upstream.

When it operating in the 2.4GHz ISM band (2.412-2.462GHz,11 Channels).it support wireless WLAN standards include 802.11b/g/n, communication has 11 channels, whose center frequencies are

CH1: 2412MHz, CH2: 2417MHz, CH3: 2422MHz, CH4: 2427MHz, CH5: 2432MHz, CH6: 2437MHz, CH7: 2442MHz, CH8: 2447MHz, CH9: 2452MHz, CH10: 2457MHz, CH11:2462MHz respectively.

3.2 WIFI RF Performance

Feature	Description
Standard	IEEE 802.11 b/g/n
Data Rate	802.11 b: 11, 5.5, 2, 1 Mbps 802.11 /g: 54, 48, 36, 24, 18, 12, 9, 6 Mbps 802.11 n: MCS 0 to 7 for HT20MHz：65 Mbps MCS 0 to 7 for HT40MHz：150 Mbps
Modulation mode	IEEE 802.11b mode: CCK, DQPSK, DBPSK IEEE 802.11g mode: 64QAM, 16QAM, QPSK, BPSK IEEE 802.11n mode : 64QAM, 16QAM, QPSK, BPSK
Network Architecture	Ad-hoc Mode(Peer-to-Peer) Infrastructure mode Scatter Net
Frequency Range	2.4GHz band: 2.412-2.462GHz
Transmit Output Power (Tolerance: +/-1dBm)	802.11 b: 20dBm; 802.11 g: 16dBm; 802.11 n (2.4GHz): 16dBm：20MHz; 14dBm：40MHz;
Antenna Type	1x1 Diversity

roborock

3.3 Block Diagram

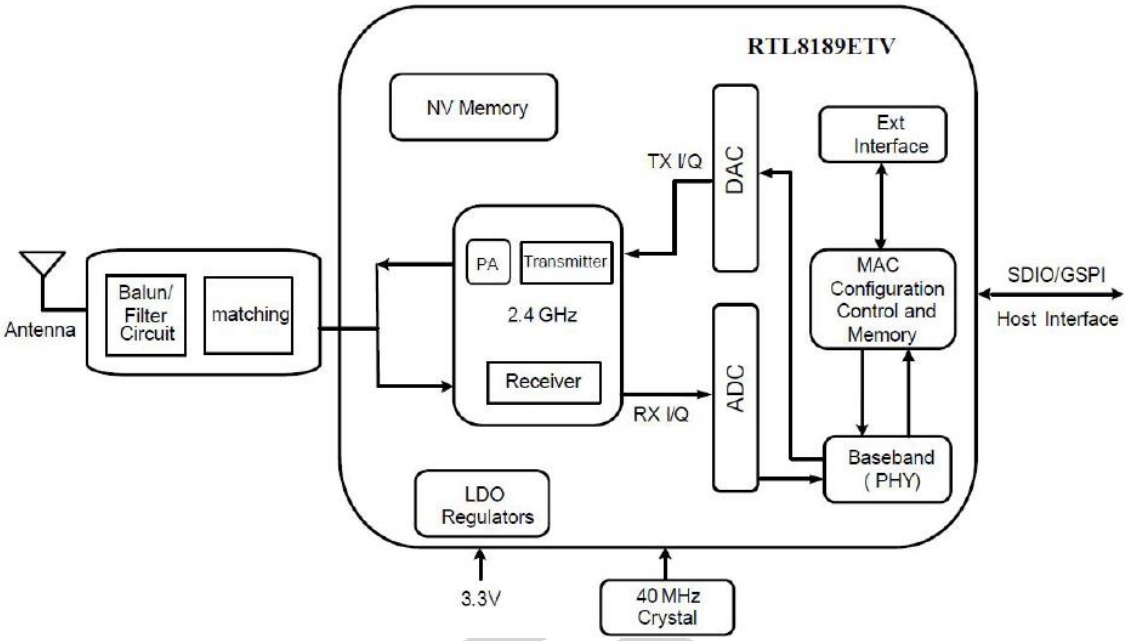

3.4 Dimension

12.0*12.0*1.4mm (LxWxH) ， Tolerance: +/-0.15mm

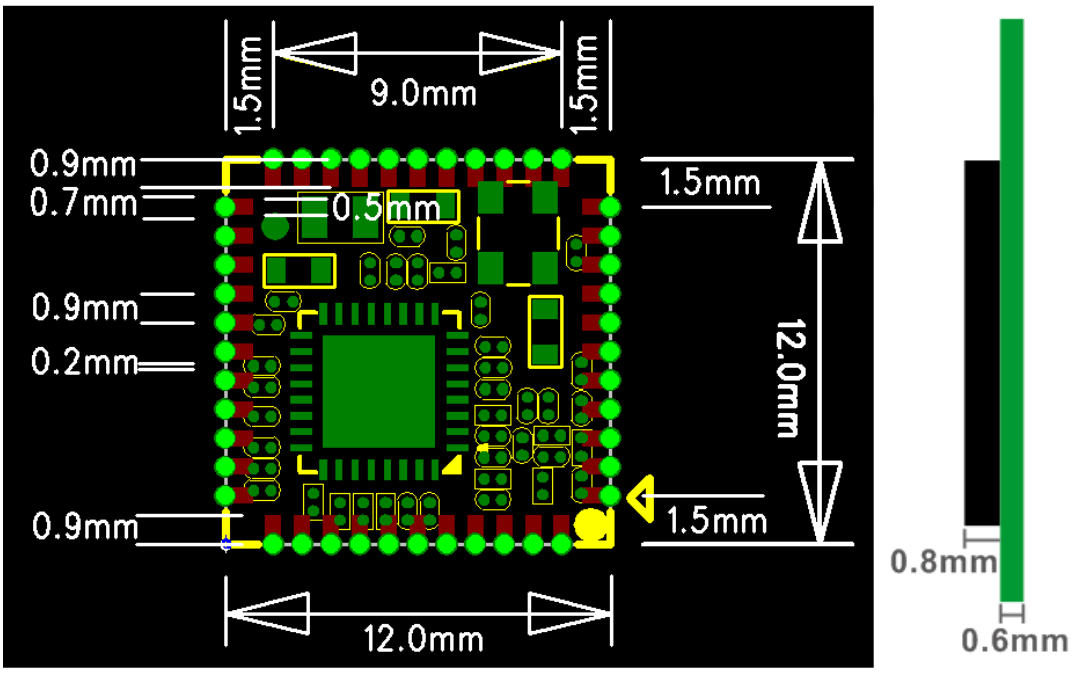

3.5 PIN Assignment

Pin #	Name	Type	Description
1	GND	P	GND
2	RF	O	WLAN RF pad
3	GND	P	GND
4~8	NC	/	NC
9	VBAT	P	VDD3.3 V
10	NC	/	NC
11	NC	/	NC
12	WL_REG_ON	I	Power down select, pull high for use
13	WAKE	O	WLAN to wake-up HOST, pull high for use
14	SD_D2	I/O	SDIO data 2
15	SD_D3	I/O	SDIO data 3 /GSPI chip select
16	SD_CMD	I/O	SDIO command/GSPI data input
17	SD_CLK	I	SDIO clock /GSPI clock
18	SD_D0	I/O	SDIO data 0 /GSPI data output
19	SD_D1	I/O	SDIO data 1 /GSPI data out

roborock

20	GND	P	GND
21	NC	/	NC
22	VDIOSDIO	P	VDIO for SDIO pin, the power supply is same as the signal level of SDIO bus .Base on platform to choose 3.3V or 1.8V
23~30	NC	/	NC
31	GND	P	GND
32	NC	/	NC
33	GND	P	GND
34~35	NC	/	NC
36	GND	P	GND
37~40	NC	/	NC
41	GND	P	GND
42~44	NC	/	NC

I: input O: output P: power

3.6 Schematic

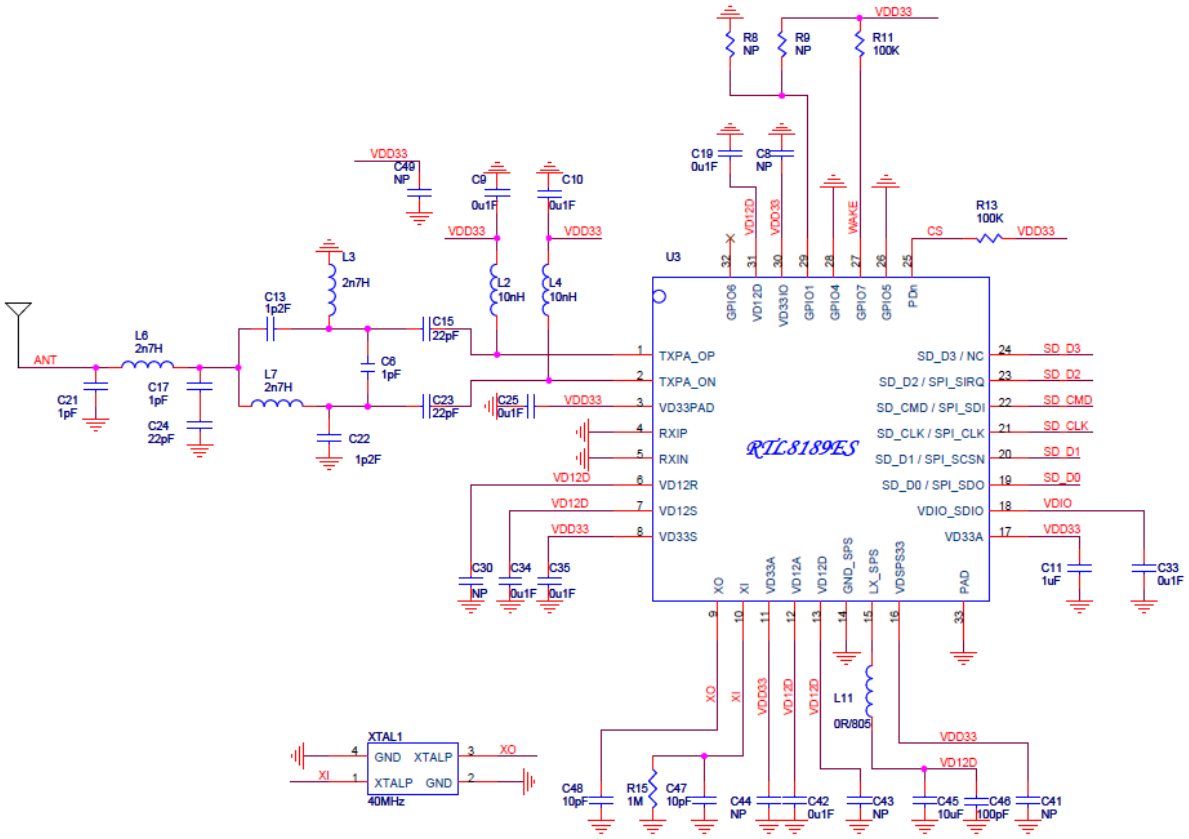

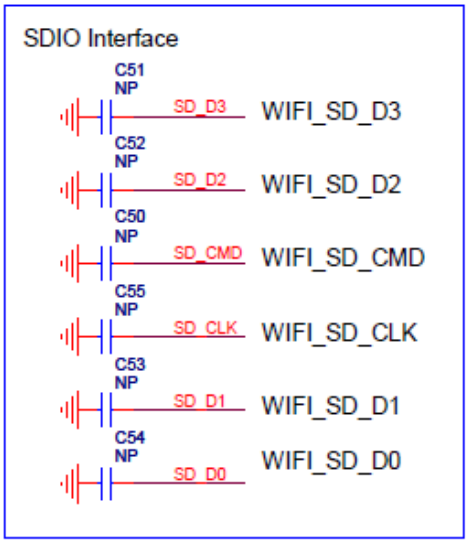

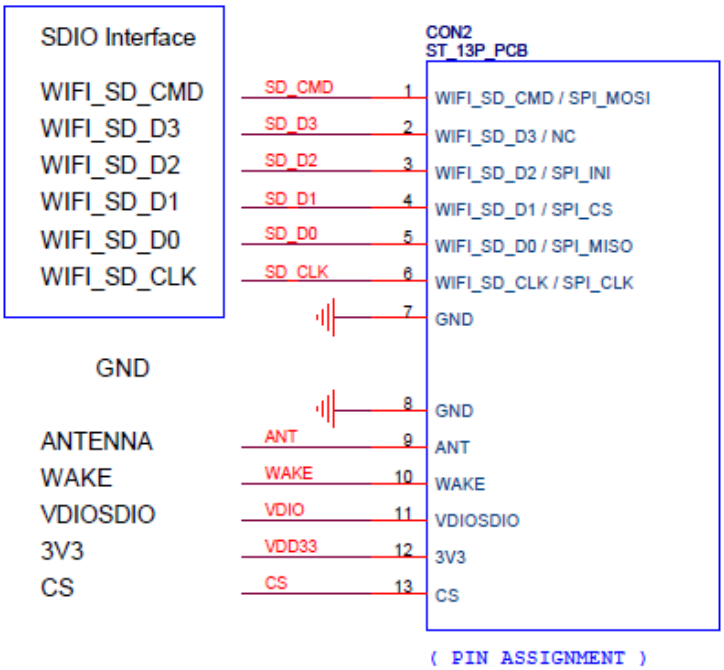

4. Antenna Specification

4.1 Antenna lists

No.	Model	Type	Band(s)	Max Peak Gain(dBi)
1	PCB	PCB antenna	2.4GHz - 2.5GHz	3.7

4.2 Wireless LAN antenna matching circuit

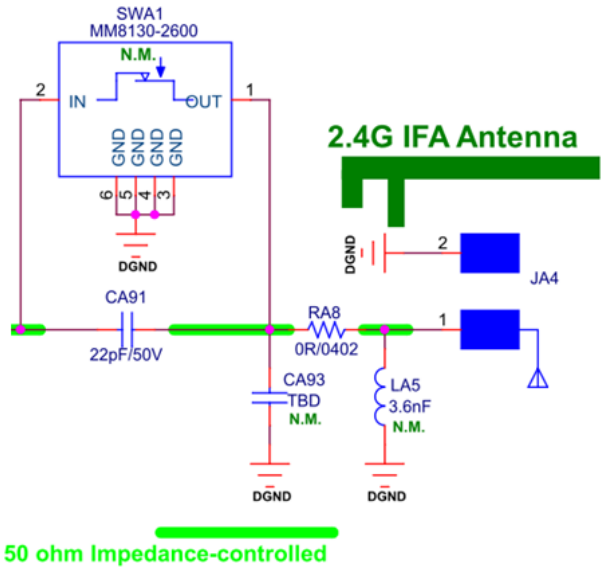

4.3 Antenna design requirements

a) RF-line need 50Ω single line impedance;

b) Antenna is 2.4G WiFi Frequency band MIFA type Board antenna

c) Antenna length, width, shape(s) as follows，Company：mm；

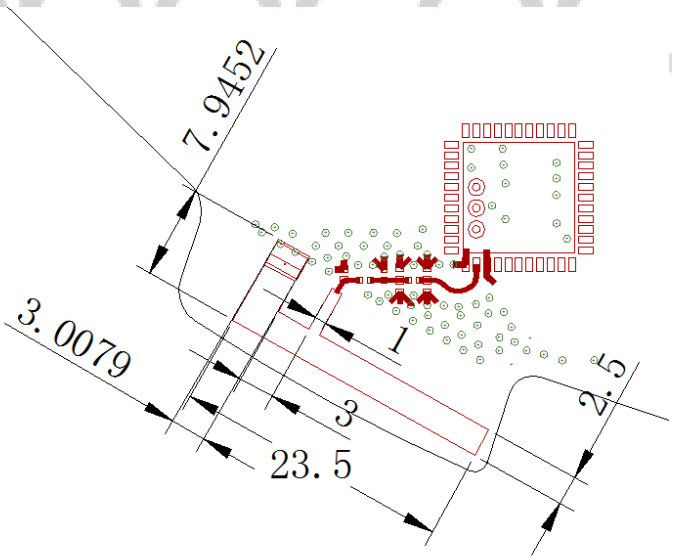

d) PCB thickness is 1.5mm，Copper-Layer 6，Antenna is Layer1；

e) Antenna put on the edge of the pcb，Clearance around and below；

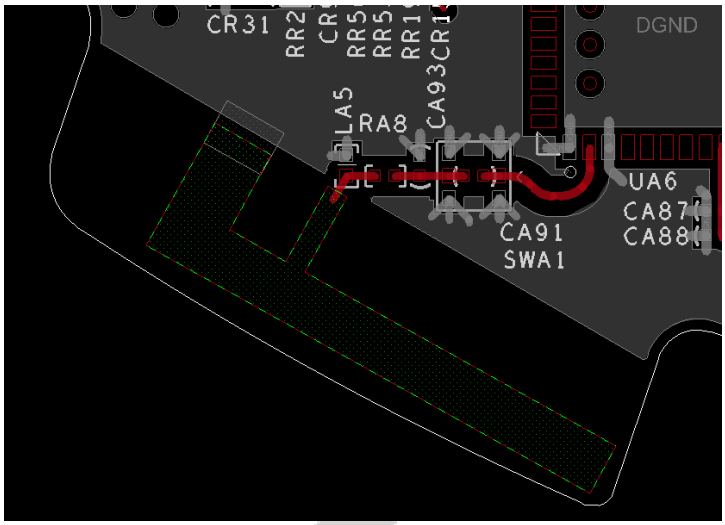

5. FCC and IC Warning

This device complies with Part 15 of the FCC Rules / Industry Canada licence-exempt RSS standard(s). Operation is subject to the following two conditions: (1) this device may not cause harmful interference, and (2) this device must accept any interference received, including interference that may cause undesired operation.

Le présent appareil est conforme aux CNR d'Industrie Canada applicables aux appareils radio exempts de licence. L'exploitation est autorisée aux deux conditions suivantes : (1) l'appareil ne doit pas produire de brouillage, et (2) l'utilisateur de l'appareil doit accepter tout brouillage radioélectrique subi, même si le brouillage est susceptible d'en compromettre le fonctionnement.

Changes or modifications not expressly approved by the party responsible for compliance could void the user's authority to operate the equipment.

This equipment has been tested and found to comply with the limits for a Class B digital device, pursuant to part 15 of the FCC Rules. These limits are designed to provide reasonable protection against harmful interference in a residential installation. This equipment generates uses and can radiate radio frequency energy and, if not installed and used in accordance with the instructions, may cause harmful

interference to radio communications. However, there is no guarantee that interference will not occur in a particular installation. If this equipment does cause harmful interference to radio or television reception, which can be determined by turning the equipment off and on, the user is encouraged to try to correct the interference by one or more of the following measures:

—Reorient or relocate the receiving antenna.

—Increase the separation between the equipment and receiver.

—Connect the equipment into an outlet on a circuit different from that to which the receiver is connected.

—Consult the dealer or an experienced radio/TV technician for help.

To satisfy FCC / IC RF exposure requirements, a separation distance of 20 cm or more should be maintained between the antenna of this device and persons during device operation. To ensure compliance, operations at closer than this distance is not recommended.

Les antennes installées doivent être situées de facon à ce que la population ne puisse y être exposée à une distance de moin de 20 cm. Installer les antennes de facon à ce que le personnel ne puisse approcher à 20 cm ou moins de la position centrale de l' antenne. La FCC des éltats-unis stipule que cet appareil doit être en tout temps éloigné d'au moins 20 cm des personnes pendant son functionnement.

Limited by local law regulations, version for North America does not have region selection option.

This device is intended for OEM integrators only. Please see the full grant of equipment document for restrictions.

If the FCC ID of this module is not visible when it is installed inside another device, then the outside of the device into which the module is installed must be label with

"Contains FCC ID: 2AN2O-RSW02 and IC:23317-RSW02".