M5PaperS3

M5STACK

2024

CONTENTS

1.OUTLINE **3**

1.1. **PaperS3**..... 3

2. SPECIFICATIONS..... 4

2.1. **Module Size**..... 5

3. QUICK START..... 6

3.1. **SCAN Wi-Fi**..... 7

3.2 **SCAN BLE Device**..... 8

4. FCC Warning..... 9

Arduino Install..... 10

1. OUTLINE

The M5PaperS3 is a highly integrated e-paper device powered by the ESP32-S3R8 controller, featuring 8MB PSRAM and 16MB Flash for exceptional performance. It includes a 4.7-inch high-resolution capacitive touch E Ink display (model: ED047TC1) with advanced reflective e-paper technology. The touch sensor model is GT911, enabling precise touch control. The device also features the BMI270 sensor for accurate motion tracking and gesture recognition, the BM8563EMA RTC for high-precision time management, and the LGS4056H charging management chip for safe and efficient battery charging. Additionally, it has an onboard Grove expansion port for connecting various external sensors, providing flexible application possibilities, and a TF card slot for expanded storage. The included 1800mAh lithium battery ensures long-lasting operation. This device is suitable for a variety of applications, including smart home and industrial control.

1.1. PaperS3R

1. **Communication Capabilities:**
- Main Controller: ESP32-S3R8
- Wireless Communication: Wi-Fi, BLE Functionality
2. **Processor and Performance:**
- Processor Model: Xtensa LX7 (ESP32-S3R8)
- Storage Capacity: 16MB Flash, 8MB PSRAM
- Processor Operating Frequency: Xtensa® dual-core 32-bit LX7 microprocessor, up to 240 MHz
3. **Display and Input:**
- Screen: 4.7 inch E Ink display (model: ED047TC1)
- Touch Sensor: GT911 for precise touch control
4. **Sensors:**
- Accelerometer and Gyroscope: BMI270
- Real Time Clock (RTC): BM8563EMA
5. **GPIO Pins and Programmable Interfaces:**
- Grove Interface: Supports connection and expansion of I2C sensors
- TF Card Slot: For expanded storage
6. **Others:**
- Onboard Interface: Type-C interface for programming and serial communication
- Battery: 1800mAh lithium battery for long-lasting operation
- Charging Management: LGS4056H for safe and efficient battery charging
- Physical Dimensions: M2 screw hole on the back for fixation
- Passive Buzzer: For sound notifications and alerts
-

2. SPECIFICATIONS

Parameter and Specification	Value
MCU	ESP32-S3R8 @ Xtensa dual-core 32-bit LX7, 240MHz
Communication Capability	Wi-Fi, BLE, OTG/CDC function, I2C sensor expansion
Supply Voltage	4.5~5.5V DC
Flash Storage Capacity	16MB-Flash
PSRAM Storage Capacity	8MB-PSRAM
Screen	4.7-inch E Ink display, ED047TC1, resolution 540 x 960
Sensors	BMI270 accelerometer and gyroscope, BM8563EMA RTC
Buzzer	Passive buzzer for sound notifications and alerts
Expansion Interface	Grove interface for connecting and expanding I2C sensors
TF Card Slot	Yes, for expanded storage
Battery	1800mAh lithium battery
Operating Temperature	0° C to 40° C
Wi-Fi Working Frequency	802.11b/g/n: 2412 MHz~2462 MHz
BLE Working Frequency	2402 MHz~2480 MHz
Size	121.5*67.7*7.7mm
Manufacturer	M5Stack Technology Co., Ltd

2.1 Module Size

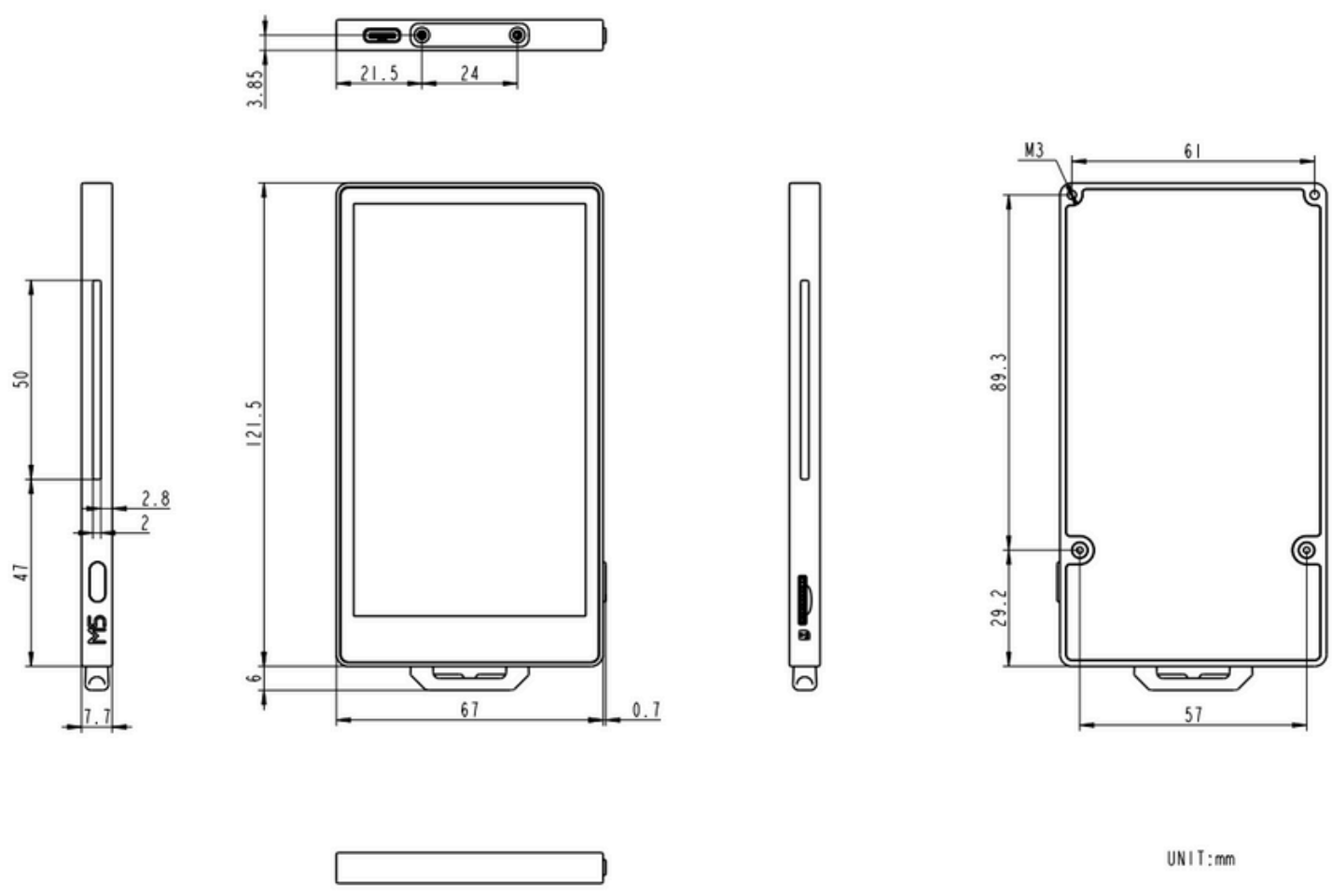

3. QUICK START

Before you do this step, look at the text in the final appendix: Installing Arduino

3.1. Print WiFi information

1. Open Arduino IDE (Refer to https://docs.m5stack.com/en/arduino/arduino_ide for the installation guide for the development board and software)
2. Press and hold the Reset button, then insert the cable
3. Select the ESP32S3 DEV Module board and the corresponding port, then upload the code
4. Open the serial monitor to display the scanned WiFi and signal strength information

ESP32S3R_WIFI | Arduino 1.8.19

File Edit Sketch Tools Help

ESP32S3R_WIFI

```
#include "WiFi.h"

void setup() {
  Serial.begin(115200);
  WiFi.mode(WIFI_STA);
  WiFi.disconnect();
  delay(100);

  Serial.println("Scanning for WiFi networks...");
  int n = WiFi.scanNetworks();
  if (n == 0) {
    Serial.println("No networks found.");
  } else {
    Serial.print(n);
    Serial.println(" networks found.");
    for (int i = 0; i < n; ++i) {
      Serial.print(i + 1);
      Serial.print(": ");
      Serial.print(WiFi.SSID(i));
      Serial.print(" (");
      Serial.print(WiFi.RSSI(i));
      Serial.print(")");
      Serial.println((WiFi.encryptionType(i) == WIFI_AUTH_OPEN) ? " " : "*");
      delay(10);
    }
  }
  Serial.println("");
}

void loop() {
  // put your main code here, to run repeatedly:
}

```

COM20

```
17:20:58.755 -> Scanning for WiFi networks...
17:20:58.755 -> 35 networks found.
17:20:58.755 -> 1: M5-UiFlow-Zone (-34)*
17:20:58.801 -> 2: XLOT (-34)*
17:20:58.801 -> 3: M5-R&D (-39)*
17:20:58.801 -> 4: WiFi_ADF4 (-39)*
17:20:58.801 -> 5: DIANJIXZ (-45)*
17:20:58.848 -> 6: Xiaomi_32BD (-47)*
17:20:58.848 -> 7: M5-UiFlow-Zone (-53)*
17:20:58.848 -> 8: M5-UiFlow-Zone (-54)*
17:20:58.848 -> 9: CenturyLink2842 (-55)*
17:20:58.848 -> 10: M5-UiFlow-Zone (-56)*
17:20:58.895 -> 11: esp-shui (-56)*
17:20:58.895 -> 12: CMCC-FSNg (-57)*
17:20:58.895 -> 13: YUESHIQI-602 (-57)*
17:20:58.895 -> 14: ChinaNet-hZsm (-57)*
```

Autoscroll Show timestamp Newline

3. QUICK START

Before you do this step, look at the text in the final appendix: Installing Arduino

3.1. Print BLE information

1. Open Arduino IDE (Refer to https://docs.m5stack.com/en/arduino/arduino_ide for the installation guide for the development board and software)
2. Press and hold the Reset button, then insert the cable
3. Select the ESP32S3 DEV Module board and the corresponding port, then upload the code
4. Open the serial monitor to display the scanned BLE and signal strength information

ATOMS3R_BLE | Arduino 1.8.19

File Edit Sketch Tools Help

ATOMS3R_BLE

```
#include "BLEDevice.h"

class MyAdvertisedDeviceCallbacks: public BLEAdvertisedDeviceCallbacks {
    void onResult(BLEAdvertisedDevice advertisedDevice) {
      Serial.print("Advertised Device: ");
      Serial.println(advertisedDevice.toString().c_str());
    }
};

void setup() {
  Serial.begin(115200);
  Serial.println("Starting BLE scan...");

  BLEDevice::init("");

  BLEScan* pBLEScan = BLEDevice::getScan();
  pBLEScan->setAdvertisedDeviceCallbacks(new MyAdvertisedDeviceCallbacks());
  pBLEScan->setActiveScan(true); // Active scan uses more power, but get results faster
  pBLEScan->start(10, false); // Scan for 10 seconds
}

void loop() {
  // Do nothing here
}
```

COM18

```
16:32:55.340 -> Advertised Device: Name: , Address: 29:b2:79:b9:a3:a0, manufacturer data: 060001092022f2ad5527637974d01222aa793bcbc9fc4c359e2392776a, rssi: -95
16:32:55.340 -> Advertised Device: Name: , Address: 68:ab:bc:a6:82:56, manufacturer data: 8f030a108212005482a6bcab6881, rssi: -72
16:32:55.387 -> Advertised Device: Name: , Address: 4c:11:0b:4a:ac:06, manufacturer data: 4c0010052818e6dfc1, txPower: 8, rssi: -78
16:32:55.387 -> Advertised Device: Name: , Address: c4:23:5c:6d:7f:cc, manufacturer data: 4c0012020003, rssi: -78
16:32:55.387 -> Advertised Device: Name: , Address: 7c:c2:94:11:dd:b3, manufacturer data: 8f030a10bb1900b1dd1194c27c81, rssi: -90
16:32:55.434 -> Advertised Device: Name: , Address: 69:9a:a5:ca:0e:76, manufacturer data: 4c001007381fa49766f208, txPower: 12, rssi: -87
16:32:55.481 -> Advertised Device: Name: , Address: 68:8a:2d:9d:69:9a, manufacturer data: 4c000719010e202b778f01000a5a7b38b9d862679f9aa0147c93dfb9a3, rssi: -92
16:32:55.481 -> Advertised Device: Name: , Address: 46:21:43:b4:e4:8f, manufacturer data: 4c0009081302c0a802531b581608006aad6eb4cfc9d7, rssi: -86
16:32:55.481 -> Advertised Device: Name: , Address: 68:13:24:e2:c9:a6, rssi: -94, serviceData: □□
16:32:55.528 -> rer data: 4c0012020000, rssi: -75
16:32:55.528 -> Advertised Device: Name: , Address: 4d:7a:15:80:e0:e4, manufacturer data: 4c0016080083cf28ec2b91b1, rssi: -75
16:32:55.575 -> Advertised Device: Name: , Address: 0d:4f:0e:0f:b8:6b, manufacturer data: 06000109202270c24b9ec6b7806f55379bea22271ecd7e87c71f99cb35, rssi: -92
16:32:55.575 -> Advertised Device: Name: , Address: 43:85:45:a1:4f:84, manufacturer data: 4c000908130cc0a81f071b5813080a88ba7d27f9c700, rssi: -81
16:32:55.622 -> Advertised Device: Name: , Address: a4:c1:38:8d:a7:00, rssi: -74, serviceData: 0X[□□
16:32:55.622 -> Advertised Device: Name: , Address: fa:e7:06:2b:fd:91, manufacturer data: 4c0012023503, rssi: -78
16:32:55.714 -> Advertised Device: Name: , Address: c3:3e:25:29:00:03, manufacturer data: 4c0012020003, rssi: -74
16:32:55.714 -> Advertised Device: Name: , Address: 52:88:46:95:91:08, manufacturer data: 4c00160800d660375f0003bf, rssi: -73
16:32:55.806 -> Advertised Device: Name: , Address: 6a:c3:bb:88:c2:0b, manufacturer data: 4c0010050e18874880, txPower: 12, rssi: -89
16:32:55.991 -> Advertised Device: Name: , Address: 4b:c9:66:74:75:f0, manufacturer data: 4c00100607194fa9cd38, txPower: 12, rssi: -87
16:32:55.991 -> Advertised Device: Name: , Address: 24:e8:e2:9b:75:46, manufacturer data: 4c0013080a4d1f30f2970b00, rssi: -91
16:32:56.038 -> Advertised Device: Name: , Address: 64:3d:63:13:1f:b0, manufacturer data: 4c00100607194fa9cd38, txPower: 12, rssi: -82
16:32:56.129 -> Advertised Device: Name: , Address: c1:55:39:b6:23:30, manufacturer data: 4c0012020000, rssi: -69
16:32:56.184 -> Advertised Device: Name: , Address: 41:a0:2a:ea:27:15, manufacturer data: 4c00160800579e01df5e3cae, rssi: -94
16:32:56.184 -> Advertised Device: Name: , Address: dd:3a:2f:71:cc:4f, manufacturer data: 4c0012020003, rssi: -90
16:32:56.265 -> Advertised Device: Name: , Address: f1:79:78:04:24:72, manufacturer data: 4c0012020003, rssi: -84
16:32:56.265 -> Advertised Device: Name: , Address: 73:d0:c7:76:2d:cd, manufacturer data: 4c0010073f1be2cc95d138, txPower: 7, rssi: -77
16:32:56.405 -> Advertised Device: Name: , Address: 75:d9:97:51:7d:8e, manufacturer data: 4c001007211fb4e4ccdc78, txPower: 12, rssi: -84
16:32:56.452 -> Advertised Device: Name: , Address: e4:84:07:a4:3e:e9, rssi: -91
16:32:56.452 -> Advertised Device: Name: , Address: 2e:da:35:f1:e5:1c, manufacturer data: 0600010f2022042879d9cedeb21fc16d6033b9bb7deb6b4e88513f2830, rssi: -95
16:32:56.452 -> Advertised Device: Name: , Address: cd:4e:ff:37:55:dd, manufacturer data: 4c0012020002, rssi: -91
16:32:56.500 -> Advertised Device: Name: , Address: 71:ab:11:45:16:08, manufacturer data: 4c0010053b18f2b4c3, txPower: 12, rssi: -87
16:32:56.545 -> Advertised Device: Name: , Address: 4e:bb:9b:58:79:b4, manufacturer data: 4c00160800c1b1dbbac7dd93, rssi: -66
16:32:56.590 -> Advertised Device: Name: , Address: dc:5d:0a:32:f6:cd, manufacturer data: 4c0012020000, rssi: -88
16:32:57.096 -> Advertised Device: Name: , Address: 65:c0:b9:6e:b8:49, manufacturer data: 4c0010052298728c65, txPower: 8, rssi: -89
16:32:57.329 -> Advertised Device: Name: , Address: 63:70:68:f2:c1:6f, manufacturer data: 4c00160800bb73dcc3dc3fa9, rssi: -86
16:32:57.329 -> Advertised Device: Name: , Address: d5:24:79:0c:93:f0, manufacturer data: 4c0012020001, rssi: -87
16:32:57.699 -> Advertised Device: Name: , Address: 42:bc:23:c2:3a:25, manufacturer data: 4c000c0e007f2849c2940c9d352a1085d4dc1006431d064dde18, rssi: -94
16:32:58.026 -> Advertised Device: Name: , Address: c4:8f:62:41:70:9d, manufacturer data: 4c0012020000, rssi: -94
16:32:58.026 -> Advertised Device: Name: , Address: d6:1e:a5:0c:5b:4e, manufacturer data: 4c001219395de24f1f2dd0ff3eb13c218d86153fee2b613140f7a80194, rssi: -73
16:32:58.213 -> Advertised Device: Name: , Address: fb:01:b0:e5:b4:ed, manufacturer data: 4c0012020002, rssi: -68
16:32:58.351 -> Advertised Device: Name: , Address: cd:55:86:51:87:a7, manufacturer data: 4c0012020003, rssi: -78
16:32:58.537 -> Advertised Device: Name: , Address: d2:e8:b8:38:e8:06, manufacturer data: 4c0012025401, rssi: -98
16:32:58.583 -> Advertised Device: Name: , Address: d0:17:51:8f:06:7e, manufacturer data: 4c0012026e00071106d0de3ee5e0414d36927a38cec0059ba4, rssi: -88
```

FCC Warning

This device complies with part 15 of the FCC Rules. Operation is subject to the following two conditions: (1) This device may not cause harmful interference, and (2) this device must accept any interference received, including interference that may cause undesired operation.

Any Changes or modifications not expressly approved by the party responsible for compliance could void the user's authority to operate the equipment.

Note: This equipment has been tested and found to comply with the limits for a Class B digital device, pursuant to part 15 of the FCC Rules. These limits are designed to provide reasonable protection against harmful interference in a residential installation. This equipment generates uses and can radiate radio frequency energy and, if not installed and used in accordance with the instructions, may cause harmful interference to radio communications. However, there is no guarantee that interference will not occur in a particular installation. If this equipment does cause harmful interference to radio or television reception, which can be determined by turning the equipment off and on, the user is encouraged to try to correct the interference by one or more of the following measures:

-Reorient or relocate the receiving antenna.

-Increase the separation between the equipment and receiver.

-Connect the equipment into an outlet on a circuit different from that to which the receiver is connected.

-Consult the dealer or an experienced radio/TV technician for help.

Specific Absorption Rate (SAR) information:

This M5PaperS3 meets the government's requirements for exposure to radio waves. The guidelines are based on standards that were developed by independent scientific organizations through periodic and thorough evaluation of scientific studies. The standards include a substantial safety margin designed to assure the safety of all persons regardless of age or health.

FCC RF Exposure Information and Statement

The SAR limit of USA (FCC) is 1.6 W/kg averaged over one gram of tissue. Device types: PaperS3 (FCC ID: 2AN3WM5PAPERS3) has also been tested against this SAR limit. The highest SAR value reported under this standard during product certification for use the body is 0.609W/kg. This device was tested for typical body-worn operations with the back of the handset kept 0mm from the body. To maintain compliance with FCC RF exposure requirements, use accessories that maintain a 0mm separation distance between the user's body and the back of the device. The use of belt clips, holsters and similar accessories should not contain metallic components in its assembly. The use of accessories that do not satisfy these requirements may not comply with FCC RF exposure requirements, and should be avoided.

Body-worn Operation

This device was tested for typical body-worn operations. To comply with RF exposure requirements, a minimum separation distance of 0mm must be maintained between the user’s body and the device, including the antenna. Third-party belt-clips, holsters, and similar accessories used by this device should not contain any metallic components. Body-worn accessories that do not meet these requirements may not comply with RF exposure requirements and should be avoided. Use only the supplied or an approved antenna.

Arduino Install

一. Installing Arduino IDE(https://www.arduino.cc/en/Main/Software)

Click to visit the Arduino official website , and select the installation package for your operating system to download.

二. Installing Arduino Board Management

1. The Board Manager URL is used to index the development board information for a specific platform. In the Arduino IDE menu, select File -> Preferences

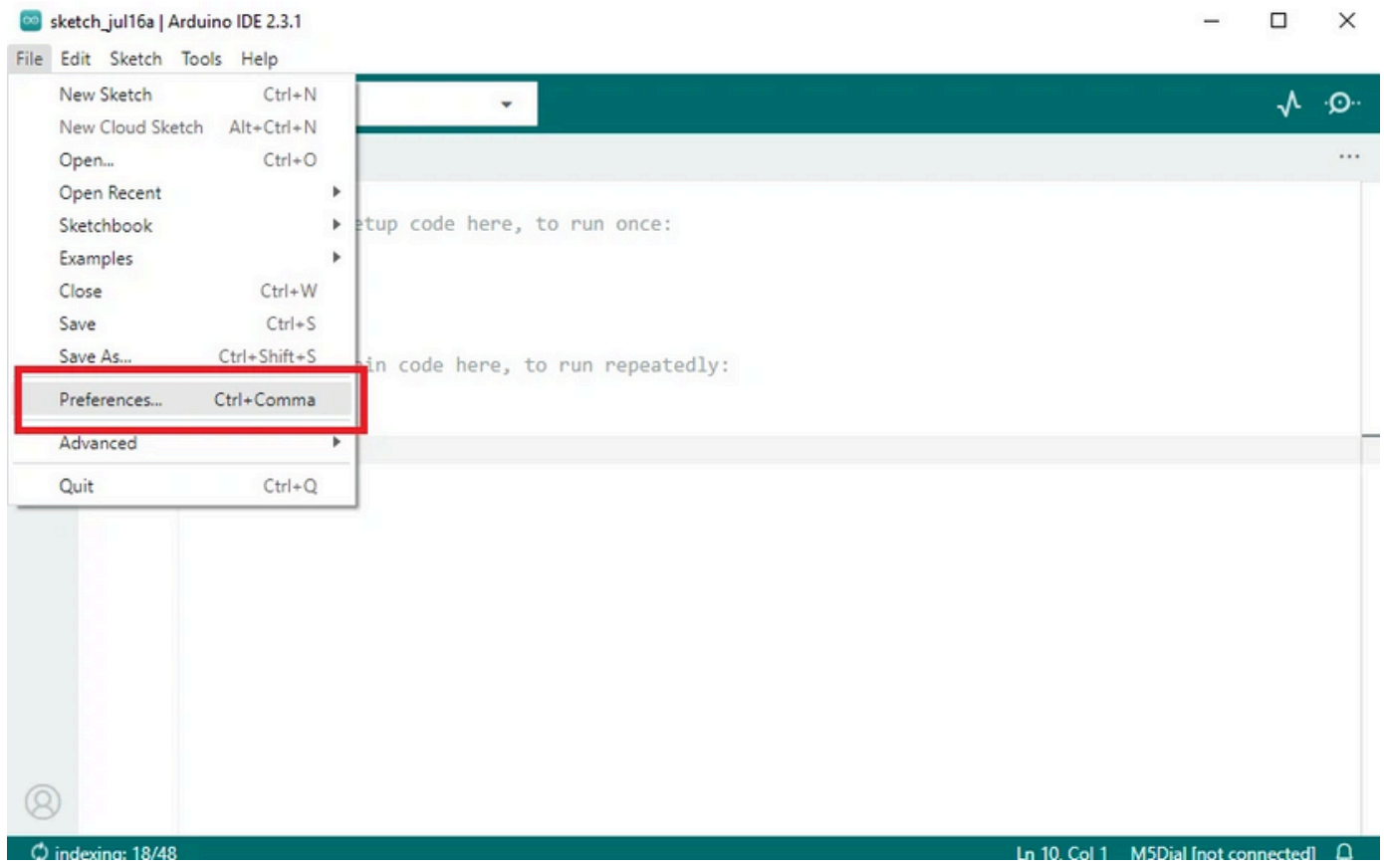

2.Copy the ESP board management URL below into the Additional Board Manager URLs: field, and save.

https://espressif.github.io/arduino-esp32/package_esp32_dev_index.json

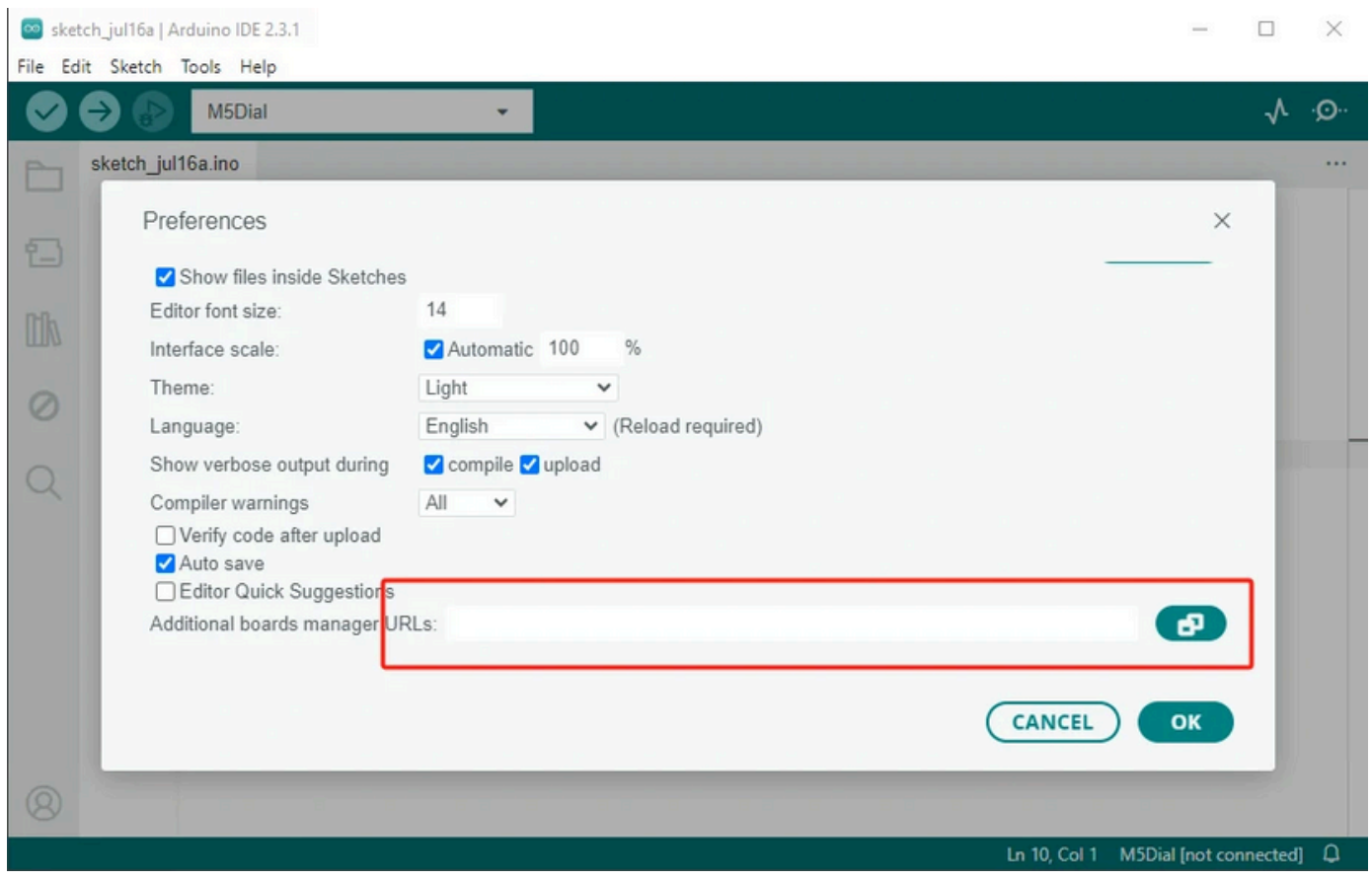

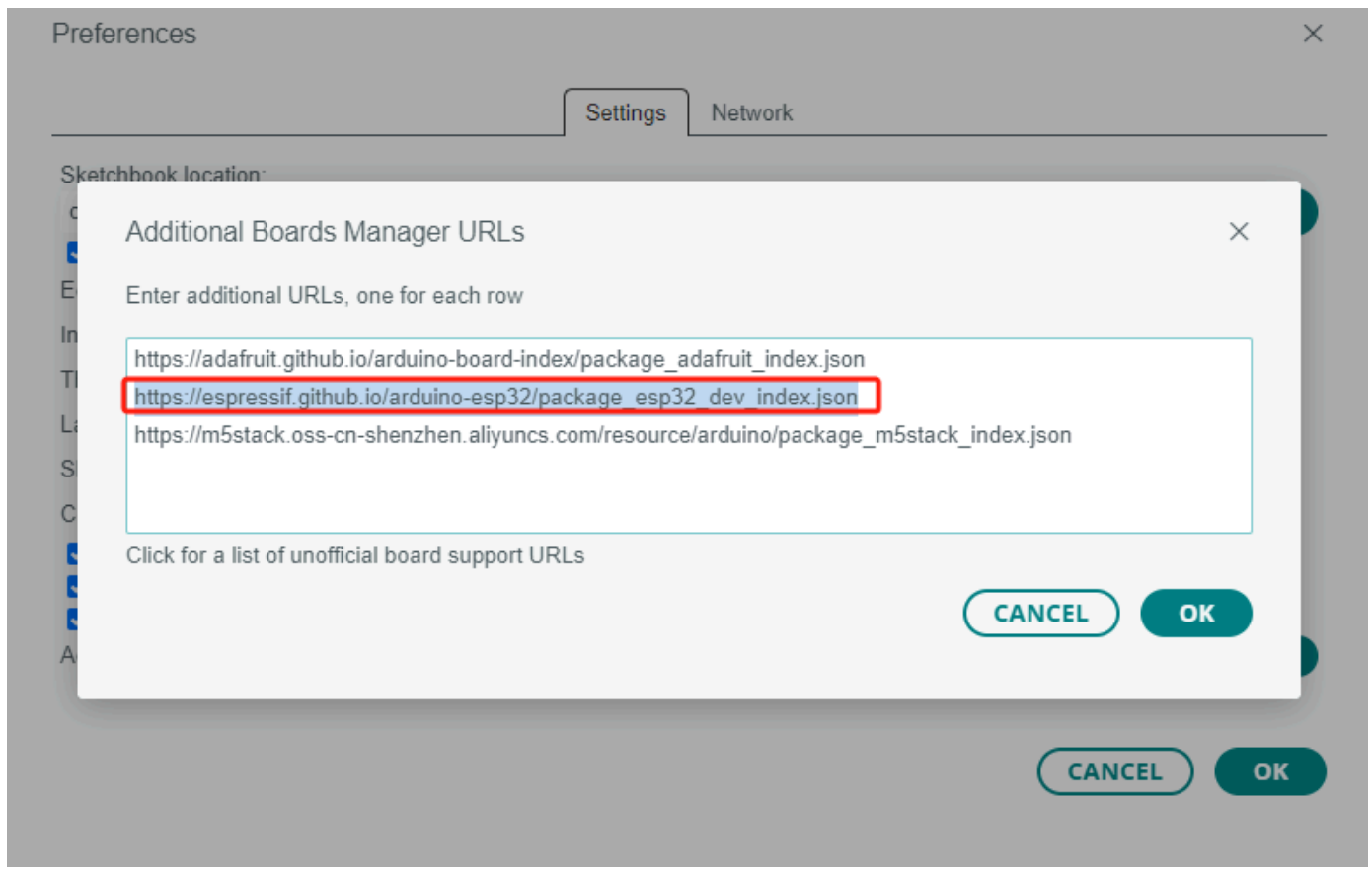

3. In the sidebar, select Board Manager, search for ESP, and click Install.

4. In the sidebar, select Board Manager, search for M5Stack, and click Install.

Depending on the product used, select the corresponding development board under Tools -> Board -> M5Stack -> {ESP32S3 DEV Module board}.

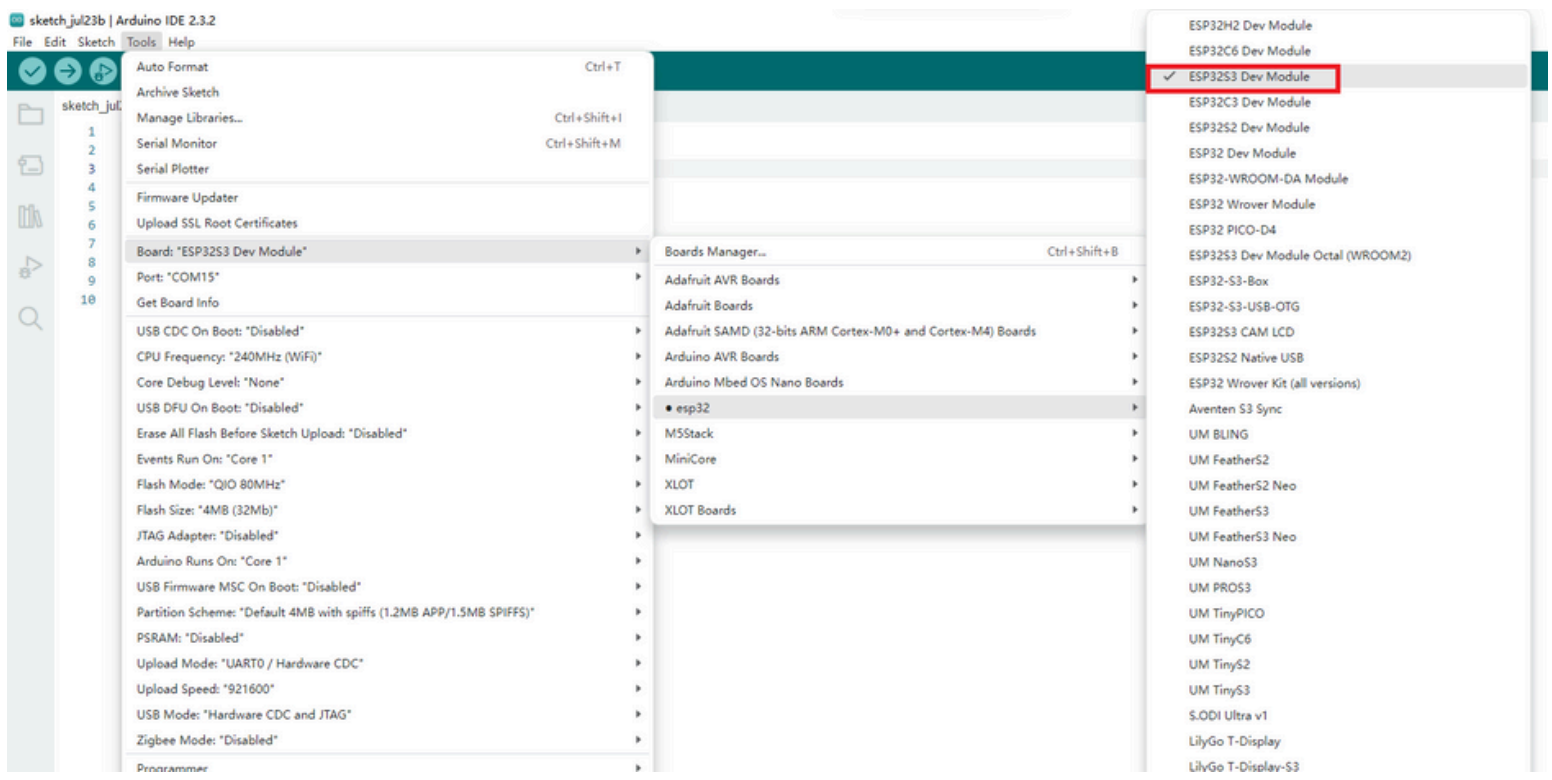

5. Connect the device to your computer with a data cable to upload the program