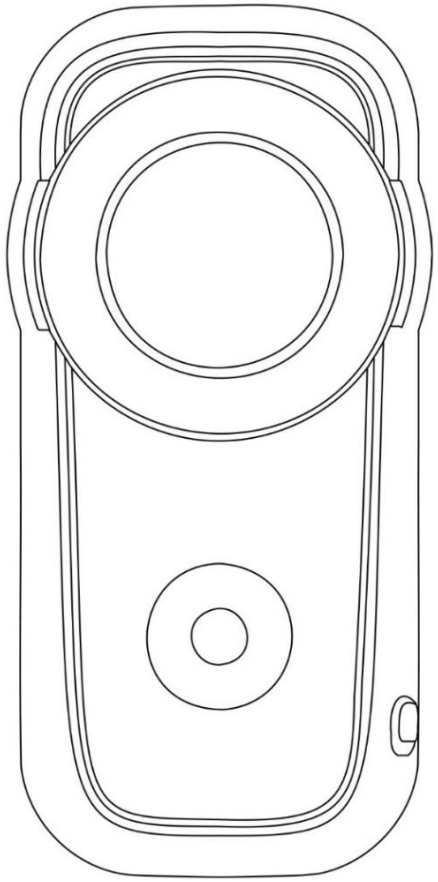

CYCLIQ

FLY6

GENERATION 3

USER GUIDE

NAME: Fly6 CE GEN3

MODEL: CE603

www.cycliq.com

Fly6 CE603 USER GUIDE - TABLE OF CONTENTS

WHAT'S IN THE BOX	3	FEATURES	18
FUNCTIONS	4	Video Resolution	18
CHANGING YOUR FLY6 SETTINGS	5	Looping Function	18
REGISTER YOUR FLY6	6	Capturing Still Images	19
READ THIS BEFORE USING YOUR FLY6	6	Incident Protection Mode	19
WARNING AGAINST COPYRIGHT INFRINGEMENT	6	Manual Footage Capture	19
SAFETY, OPERATING AND CARE INFORMATION	7	Cycliq Home Safe Function	21
CAUTIONS	7	Bike Alarm	22
		Idle Mode	22
CHARGING YOUR FLY6 BATTERY	8	Durability	22
BATTERY LEVEL INDICATOR	9		
		USING YOUR FOOTAGE	23
INSERTING AND REMOVING THE microSD CARD	10		
ATTACHING THE SAFETY TETHER TO YOUR FLY6	11	CYCLIQPLUS MOBILE APP	24
MOUNTING YOUR FLY6	12		
		TROUBLESHOOTING YOUR FLY6	27
USING YOUR FLY6	15	TROUBLESHOOTING ALERTS SUMMARY	28
TAIL LIGHT OPTIONS	15		
VISUAL AND AUDIO ALERTS SUMMARY	16	JOIN THE CYCLIQ COMMUNITY	29
AUDIO SETTINGS	17		
AIRPLANE MODE	17	TECHNICAL DATA	30
		COMPLIANCE STATEMENTS	31
		REGULATORY INFORMATION	33

WHAT'S IN THE BOX

- 1x Fly6
- 1x Cycliq 32GB microSD card
- 1x Seat post mount
- 1 x Standard seat post strap
- 1 x Aero seat post strap
- 1 x 0° Spacer
- 1 x D-shaped seat post adaptor
- 1 x Aero seat post adaptor
- 1 x USB to USB-C cable
- 1 x Safety tether
- 1 x Safety information and warranty sheet (not pictured)
- 1x Quick Start Guide (not pictured)

FUNCTIONS

Full HD video and audio recording with multiple light modes

Looping recording for set-and-forget use

Incident Protection technology

Home Safe mode

Bike alarm

Idle mode

Ultra-wide viewing angle

Audible status alerts

Bluetooth® connectivity

CHANGING YOUR FLY6 SETTINGS

Most of the primary functions of the Fly6 can be controlled using the Power and Q buttons on the side of the device.

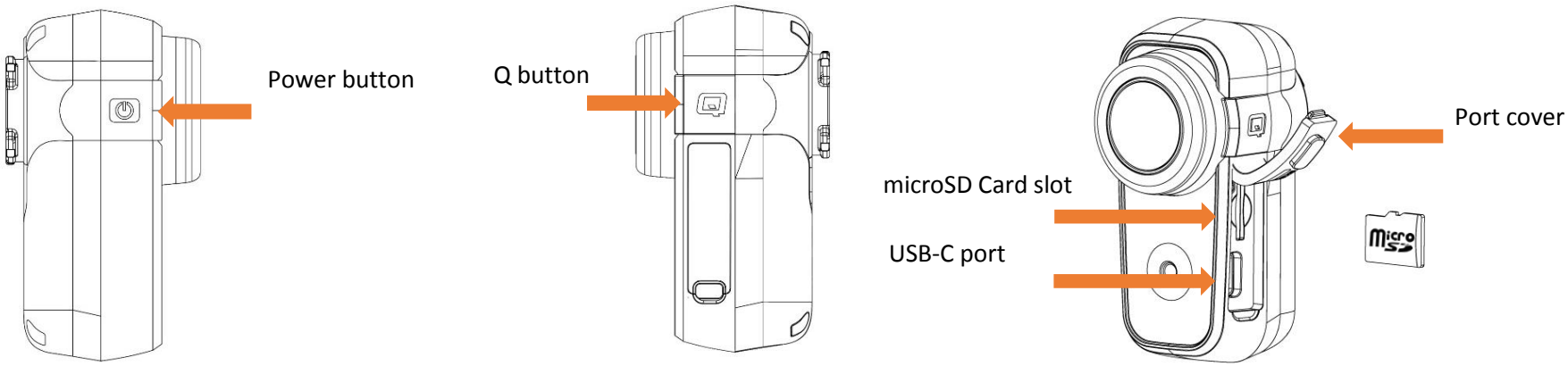

Summary

1. On the Fly6
    - All primary functions can be accessed using the Power and Q buttons.

2. On the CycliqPlus mobile app
    - There are other settings and features that are only accessible via the CycliqPlus mobile app (iOS and Android). Please download this from iTunes or the Google Play Store.

3. On the Cycliq desktop app
    - This option offers similar functionality to the CycliqPlus mobile app. It is accessible on your PC or Mac when you plug your Fly6 into your computer using the supplied USB cable. Alternatively insert your microSD card into your computer's microSD card reader.

REGISTER YOUR FLY6

We strongly advise that you register your Fly6 with Cycliq. Once registered, you'll receive notifications for new software or firmware updates, new features and user tips. Registration also speeds up the process should you require assistance with technical support or warranty queries.

To register your device, visit cycliq.com/register, or use the CycliqPlus mobile app.

READ THIS BEFORE USING YOUR FLY6

Disclaimer

The Fly6 is designed specifically to be used as a rear 'tail light' with video and audio recording capabilities for bicycles. While every effort has been made to ensure it will fit most bicycles on the market, it may not fit all bicycles, depending on your bike set up.

Please note that Cycliq, its subsidiaries and affiliates, and its distributors are not liable for any consequential damages arising from any malfunction of the device, including memory cards.

WARNING AGAINST COPYRIGHT INFRINGEMENT

The images recorded with this camera are intended for personal use. Do not record images that infringe upon copyright laws without the prior permission of the copyright holder. Please be advised that in certain cases the copying of images from performances, exhibitions, or commercial properties by means of a camera or other device may contravene copyright or other legal rights even if the image was shot for personal use.

SAFETY, OPERATING AND CARE INFORMATION

The following is important information which relates to the safe operation and care of your Fly6. For more information, please read your 'Safety Information & Limited Warranty Guide' contained in your accessory box and visit cycliq.com/gsg for more information.

CAUTIONS

- Warning! No modification of this device is allowed. Opening the housing of the Fly6 will damage the water-resistant seal and void your warranty.
- The Fly6 is not a toy: children should not play with the device.
- Do not look directly at the LED lights when operating.
- Do not immerse the Fly6 in water or any other liquid.
- Avoid dropping or knocking the Fly6 in any way.
- Pay attention and care when closing the port cover. Please ensure it is closed completely prior to operation.
- No liability can be accepted for any damage caused by non-compliance with these instructions or any other improper use or mishandling.
- The Fly6 has a rechargeable non-replaceable lithium-ion battery. When disposing of this, it should be done in compliance with the laws, rules and regulations of your relevant local authorities.
- The Fly6 is provided with a mode that makes it safe for transport by air, road and sea. This is called Airplane mode and must be enabled when transporting or shipping your Fly6. We recommend transporting and shipping your Fly6 with less than 30% charge.

CHARGING YOUR FLY6 BATTERY

Your Fly6 comes partially charged. Before using it for the first time, please charge the device fully.

To charge:

- Connect your device to a USB power adapter (not supplied) using the supplied USB cable.
- The indicator light will illuminate red showing the device is charging.
- The indicator light will illuminate green when the device is fully charged.

You can charge your Fly6 using the USB cable provided and your computer however this will significantly reduce the rate of charge. For the quickest charge, use a USB power adapter that supports USB fast charge (5V @ 2.1A).

Note

The Fly6 is 'Fast Charge' compatible and accepts up to 2.1 amps. Accordingly, the time to charge from flat to fully charged varies from 1.5 to 6 hours depending on the method of charging, i.e. mains power USB at 2.1 amps (not supplied) or computer USB (at as little as 0.5A). Battery life will diminish over time and charge cycles.

BATTERY LEVEL INDICATOR

When turning on your Fly6, an audible battery status will sound, alerting you to the current battery level. This will indicate whether you have enough power for your next ride. See below for audible notification guide:

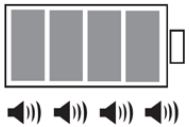

4 rapid high pitched beeps = 75% to 100% charged

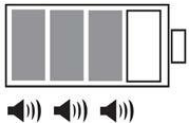

3 rapid high pitched beeps = 50% to <75% charged

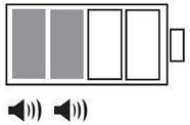

2 rapid high pitched beeps = 25% to <50% charged

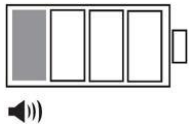

1 rapid high pitched beep = 12% to <25% charged

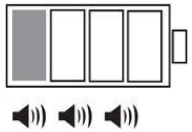

3 long high pitched beeps = Less than 12% charged

INSERTING AND REMOVING THE microSD CARD

Your Fly6 comes with a 32GB microSD card pre-installed.

Your Fly6 must have a microSD card installed to operate.

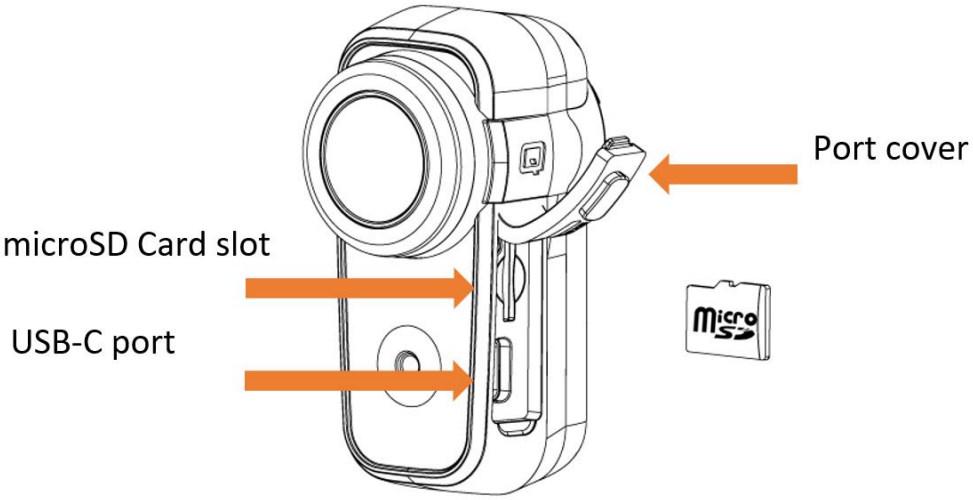

You can insert a microSD card into the microSD card slot of your Fly6 device and press in gently until locked in place. Please ensure the label on the microSD card is facing towards the front of the Fly6, as illustrated above.

To remove your microSD card, gently press down on the microSD card until it releases from the microSD card slot.

Note
Before your first ride with your Fly6, check and adjust your date and time settings – see page 24.

ATTACHING THE SAFETY TETHER TO YOUR FLY6

On the back of the Fly6 there are two holes for the safety tether to be attached through.

Thread the thinner part of the tether through the holes, then thread the other end through the loop to secure the tether.

We recommend always using the Fly6 with the tether attached.

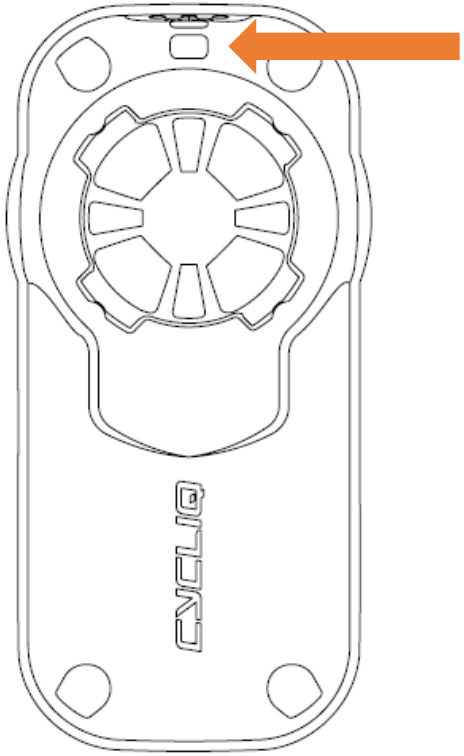

MOUNTING YOUR FLY6

Your Fly6 comes with a seat post mount that features the Cycliq Quick Release System. It is attached to the seat post using one of two different Velcro seat post straps that allow for its use on traditional or aero seat post configurations.

1. Insert either the standard or aero length seat post strap and pull all the way through until the clasp meets the seat post mount, ensuring the silicon-coated surface grips your seat post.

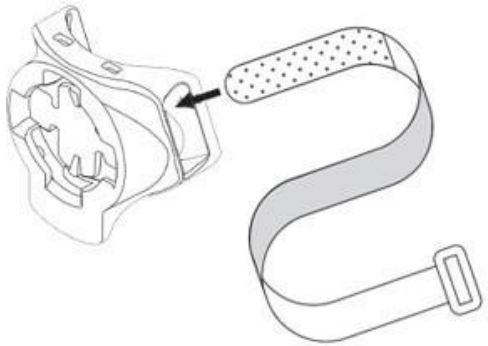

2. Select the appropriate spacer or adapter for your bike. Place the spacer or adapter between the Fly6 seat post mount and the seat post.

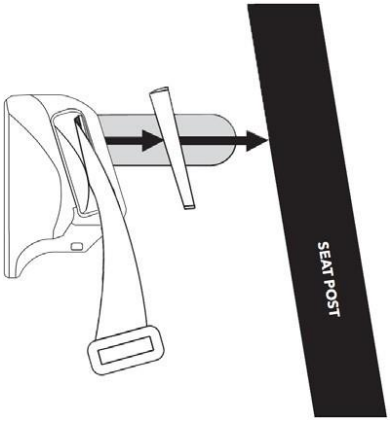

3. While holding the seat post mount against your seat post, wrap the seat post strap around the seat post and pull through the slot at the other end of the Fly6 seat post mount.

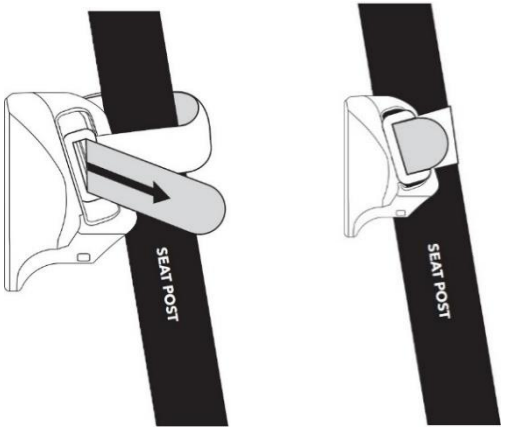

4. To mount your Fly6 align the tabs on the device with the slots in the seat post mount. Turn device **clockwise** a 1/8th turn until you hear a click and then the device will be locked into the seat post mount. Note : The device must be mounted in an upright position as shown.

5. You can easily remove your Fly6 from the bike by removing it from the seat post mount with a 1/8th turn **anticlockwise**. You can leave the mount on your bike for next use.

USING YOUR FLY6

Turning on your Fly6

Press and hold the power button (for approximately 3-4 seconds) until the rotating LED bezel illuminates and the 'power on' chime is heard – then release. Power level 'beeps' will sound, signalling the battery status - see battery level indicators on page 9.

Turning off your Fly6

Press and hold the power button (for approximately 3-4 seconds) until the power level 'beeps' sound (indicating the battery status) and the power off chime is heard or the LEDS have turned off.

TAIL LIGHT OPTIONS

The following options are available:

- Camera Only mode (tail light off)
- Constant mode High (tail light solid with high intensity)
- Constant mode Low (tail light solid with low intensity)
- Flash mode High (tail light flashing with high intensity)
- Flash mode Low (tail light flashing with low intensity)
- Organic mode (tail light random pattern with variable intensity)

You can cycle through the available tail light options using the Power button.

The available tail light options can be customised via the CycliqPlus app.

Note

To maximise battery life, select a lower intensity tail light option and turn off your Fly6 when not in use. Your tail light mode and intensity will be remembered when you power off your Fly6. The next time you power on your Fly6 it will resume with the previous tail light mode and intensity. Consider bicycle light regulations in your area when setting up your tail light.

VISUAL AND AUDIO ALERTS SUMMARY (Refer to the diagram on page 15)

LEDS	**AUDIO ALERTS (Volume Dependant)**	**REASON**
All LEDs off	None	Fly6 is off
Three red flashes of the indicator light	None	Fly6 requires recharging
Single solid green indicator light	None	100% charged & Fly6 is connected to a working charger
Single solid red indicator light	None	0-99% charged & Fly6 is connected to a working charger
Single solid blue indicator light	None	Bluetooth connected
All bezel LEDs blinking red in unison	Two quick and one longer beep every 12-14 seconds	microSD Card error
Bezel LEDs rotating clockwise (red)	Optional short beep every 3, 5 or 10 mins	Fly6 is recording (sound configured using BEEP INTERVAL)
N/A	Camera Shutter Sound	Still image captured
Bezel LEDs go from top to bottom and back again on both sides	Ascending Chime	Fly6 has been turned on
None	Descending Chime	Fly6 has been turned off
N/A	4 rapid high pitched beeps	75% to <99% charged (only when turning on or off)
N/A	3 rapid high pitched beeps	50% to <75% charged (only when turning on or off)
N/A	2 rapid high pitched beeps	25% to <50% charged (only when turning on or off)
N/A	1 high pitched beep	12% to <25% charged (only when turning on or off)
N/A	3 long high pitched beeps	Less than 12% charged (only when turning on or off)
See Home Safe Function on page 21	One long and one very long beep every 60 seconds	Less than 12% charged (during use)
N/A	3 rapid chirps	Incident Protection mode triggered
Tail light (as per options on page 15)	N/A	Keeps you visible

LEDS	**AUDIO ALERTS (Not Volume Dependant)**	**REASON**
Bezel LEDs rotating clockwise (red) & tail light in High Intensity Pulse (Home safe mode will be bypassed)	Constant Repeating Ascending Tone	Alarm triggered

AUDIO SETTINGS

The Fly6 has a microphone which records sound in high quality. It also has a speaker which is used for audible alarms and alerts.

Volume levels:
The audio volume of the speaker can be set from off to 100%, in 20% increments (0-5).

The volume of the audio can be customised via the CycliqPlus app on mobile or desktop.

Audible alerts:
A recording alert notification can be set using the CycliqPlus app. This provides a short beep at 3, 5, or 10-minute intervals to notify you that your Fly6 is recording video footage. This is particularly useful as you can't see the rotating bezel whilst riding. This alert can also be turned off and is affected by the volume setting.

AIRPLANE MODE

Airplane mode turns off all device signals rendering it compliant for airline travel, transport and shipping.

To activate Airplane mode the Fly6 must be turned off, and then simultaneously press and hold the power and Q button for 3-4 seconds. Each side of the LED bezel will flash alternately twice to confirm airplane mode is activated.

We recommend transporting and shipping your Fly6 with less than 30% charge.

To deactivate airplane mode, turn the Fly6 on as normal.

FEATURES

Video Resolution
Fly6 is equipped with a Full HD camera. The lens has a 135° viewing angle providing an ultra-wide view of what's going on behind you. There are two video resolutions to choose from. More storage space and power will be used with the higher resolution setting.

Video	Frames per second	Screen resolution
1080p FHD	30	1920x1080 16:9
720p HD	60	1280x720 16:9

Looping Function
Your Fly6 is designed as a 'set-and-forget' cycling accessory. The footage is set to record on a 'continuous loop' so you don't have to worry about running out of storage space on your microSD card. When there is no more space left, the device will then start recording over the oldest footage.

Any locked footage saved by the Fly6 Incident Protection mode or manual footage capture, will not be overwritten by this looping function.

The looping function cannot be turned off. This ensures that you do not forget to record your ride. If you want to keep your ride footage, ensure you transfer it to another storage device.

The maximum duration of video footage that you can record is dependent on the chosen video setting as well as the storage capacity of your microSD card.

Locked footage can completely fill your microSD card. We recommend regularly transferring any locked footage and other videos to another storage device and then formatting your microSD card with the CycliqPlus app.

Capturing Still Images
Your Fly6 can take still images while recording video. You can do this by holding the Q and Power button simultaneously for 1 second. This image will be saved as a JPEG and can be accessed with the rest of your footage. The Fly6 will emit a sound like a camera shutter to confirm.

Incident Protection Mode
The Fly6 has been designed to save footage from major incidents without being recorded over and without you having to do anything.

Incident Protection is activated when the Fly6 is tilted more than 60 ^{o} from the vertical (or 30 ^{o} from the ground) for more than five seconds. If this happens, your Fly6 will lock the current and immediately preceding video segments. This prevents the footage from being overwritten by the video looping technology.

Incident Protection Mode can be enabled and disabled via the CycliqPlus app. The default setting is enabled.

Manual Footage Capture
If you witness an event that you want to capture and retain when riding, simply press and hold the Q button for 2 seconds. This will behave as if Incident Protection Mode has been triggered and 3 rapid chirps will sound to confirm.

5-minute segment, Incident Protection example
10-minutes of locked files

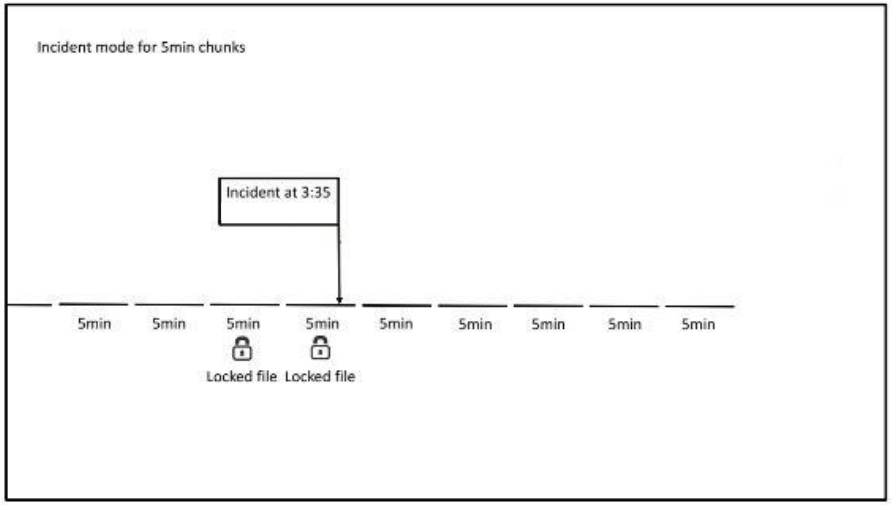

10-minute segment, Incident Protection example
20-minutes of locked files

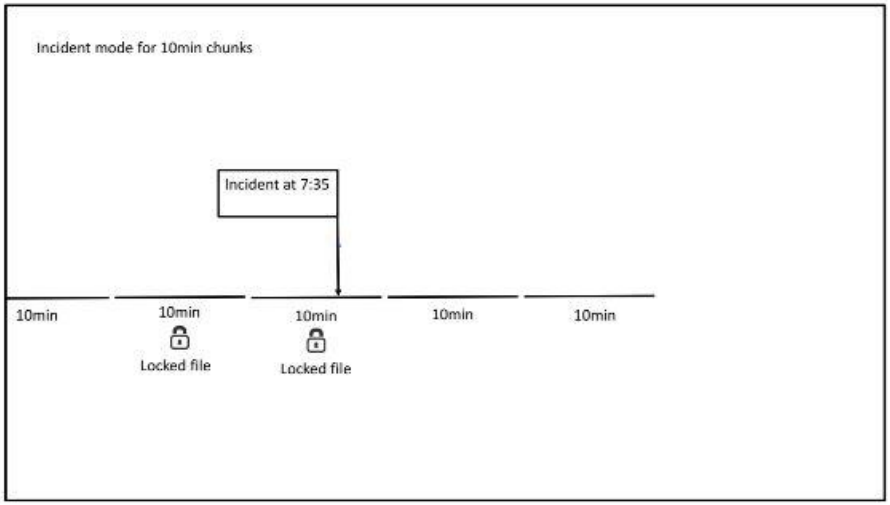

15-minute segment, Incident Protection example
30-minutes of locked files

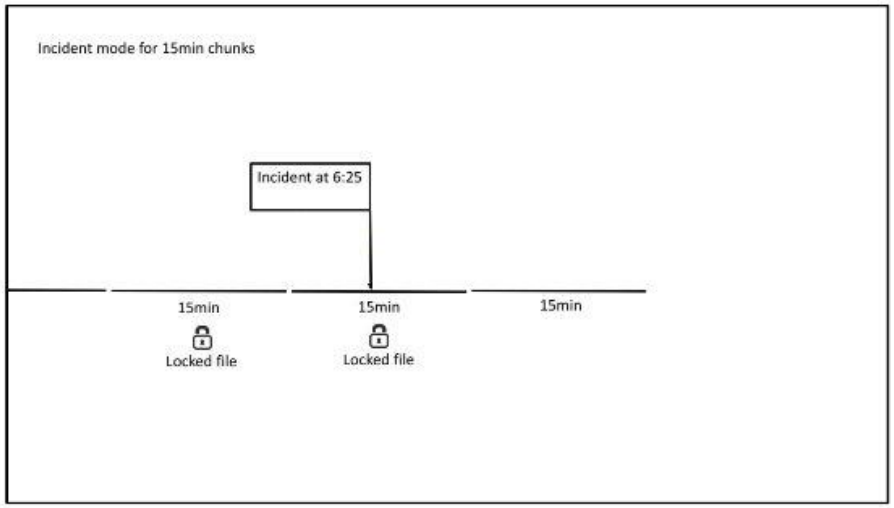

Note on current segment: When Incident Protection Mode is triggered, or if you request a Manual Footage Capture, the current segment will be locked but it will also continue recording until the segment is complete or the device is turned off. For example, if you trigger Incident Protection Mode 3 minutes into a 5 minute segment, your Fly6 will also record the following 2 minutes and add it into the locked file.

The Incident Protection Mode can be turned off via the CycliqPlus app, however, this is not recommended

Cycliq Home Safe Function

Whilst your safety is our number one priority, your battery will eventually run out. When your battery level falls below 12% the Fly6 will automatically enter Home Safe mode to help manage this situation.

When Home Safe mode is activated, you will hear one long and one very long beep every 60 seconds depending on your volume setting.

If the Fly6 is recording and the tail light is in use when Home Safe mode is activated then the camera will stop recording. If the tail light is set to a high intensity option then this will be changed to low intensity. The Fly6 will then continue to power the lights until the battery reaches 0% and the Fly6 will power off.

If the Fly6 is in camera only mode when Home Safe mode is activated the camera will continue to record until the battery reaches 0% and the Fly6 will power off.

You can still use the power button to cycle between all available tail light options, including any high intensity options. This allows you to prioritise either being seen or recording depending on your circumstances.

Bike Alarm
The Fly6 bike alarm can be armed via the CycliqPlus mobile app. If your Fly6 is moved whilst it is armed (including if your bike is moved with the Fly6 attached), it will sound an alarm, the tail light will begin to pulse and the camera will start recording. You will also receive an alert and alarm notification on your smartphone if you are in Bluetooth range.

The bike alarm can be turned off (if you are in Bluetooth range) via the CycliqPlus mobile app.

Manual over-ride of bike alarm
If the alarm is active but cannot be stopped, press both the power button and Q button until the alarm stops. This normally takes around eight seconds.

Idle Mode
Idle Mode is intended to assist with battery management. If this mode is active, the Fly6 will turn off automatically after sensing no movement for 15 minutes. You can turn the Fly6 back on as you normally would when you return to using it.

Idle Mode can be enabled and disabled via the CycliqPlus app. The default setting is disabled.

CAUTION
Cycliq recommends familiarising yourself carefully with this function before using it as this function ***can prevent your ride from being recorded****. Idle mode should only be used with an audible alert setting of 3, 5, or 10 minutes so you are aware if your Fly6 has turned off.*

Durability
The Fly6 has been designed for all-weather use and is water and dust resistant. You should still take care to ensure the Fly6 port cover is firmly and correctly sealed before use.

USING YOUR FOOTAGE

Accessing Your Footage

After your ride, you can access your footage in two ways:

1. Connect your Fly6 directly to any PC or Mac using the supplied USB cable.
2. Remove the microSD card and read data using a compatible device.

Video Segment Length

Footage is saved in chronological order in 5, 10 or 15-minute segments in MP4 format, with each segment creating a separate file. Smaller files can be more convenient to move and edit however larger segments will increase the duration of any locked footage in a single file. For example, this may be useful by allowing you longer to find a safe place to pull over and initiate a manual footage capture.

The table below gives an indication of approximate file size per segment length:

Example at 1080p FHD @30fps	
Segment Length	Approx. File Size
5 minutes	850 MB
10 minutes	1.7 GB
15 minutes	2.55 GB

Video segment length can be changed via the CycliqPlus app.

Editing Footage

You can edit the footage from your Fly6 device using the CycliqPlus app. From here you can also overlay Strava metrics and share highlights from your ride.

CYCLIQPLUS MOBILE APP

All Fly6 settings can be managed using the CycliqPlus mobile app - available for iOS and Android.

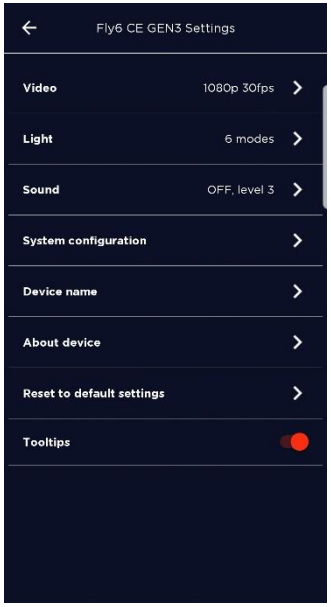

Connecting To Your Mobile Device

Your Fly6 uses Bluetooth for connection to your iOS or Android device. The default setting is for Bluetooth to be on only when the Fly6 is on. This is enabled to help conserve battery life. This can be changed to be always on all under System configuration. This means the first time you connect your Fly6 to your mobile device, you need to turn it on.

Time and Date Settings

The Fly6 is automatically synced with the time and date information from your smartphone when connecting to the CycliqPlus mobile app. (Note: You can manually input the date and time via the CycliqPlus desktop app.)

File Lock Warning

This triggers a pop up and audible alert on your CycliqPlus mobile app if more than 50% of your microSD card is filled by locked video footage.

Tail Light Settings

This function allows you to select which light options will be available via the Power Button on your Fly6. (see page 15)

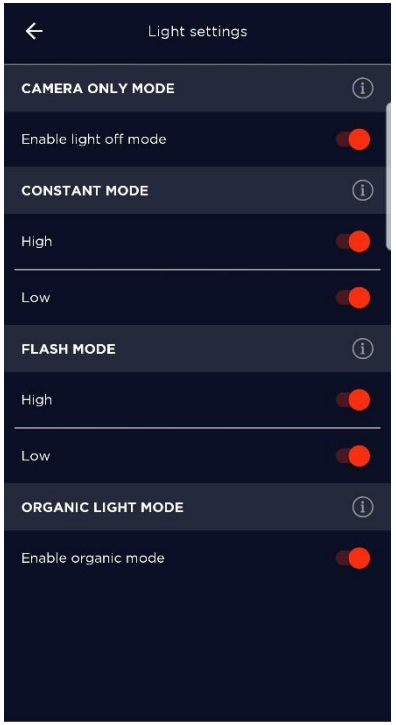

TROUBLESHOOTING YOUR FLY6

Rebooting Your Fly6

If your Fly6 requires a reboot, press and hold the Q button for 10 seconds and your Fly6 will restart.

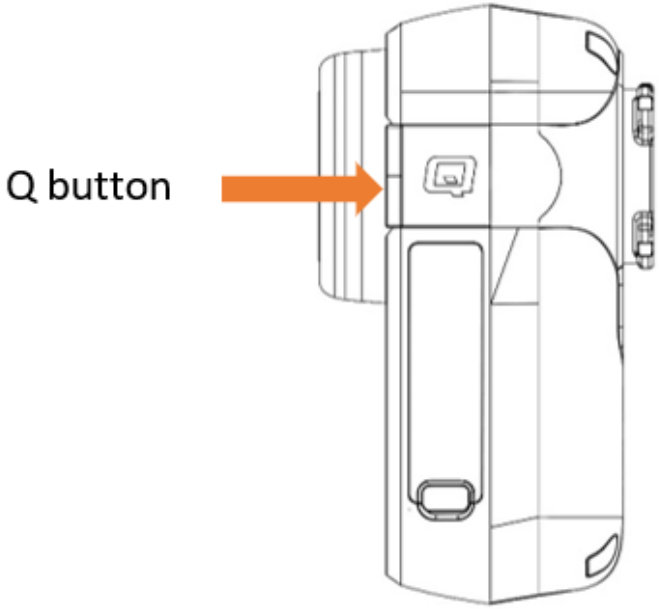

Warning!
DO NOT reboot your Fly6 when in the process of completing a firmware update as this may damage your Fly6.

TROUBLESHOOTING ALERTS SUMMARY (Refer to the diagram on page 15)

LEDS	**AUDIO ALERTS (Volume Dependant)**	**REASON**
Single flashing green indicator light	None	Firmware update in progress
Single solid white indicator light	None	Error / Fly6 requires charging
Single alternating blue and white indicator light	None	Bluetooth is starting
All bezel LEDs blinking red in unison	Two quick and one longer beep every 12-14 seconds	microSD Card error

JOIN THE CYCLIQ COMMUNITY

We love being part of the global cycling community and hope to improve the safety of everyone on the road. We're active on social media and if you use Strava, we welcome you to join the Cycliq Strava club and ride with our members from around the world.

YouTube - https://www.youtube.com/user/Fly6camera

Instagram - https://instagram.com/cycliq/

Facebook - https://www.facebook.com/Cycliq/

Twitter - https://twitter.com/Cycliq

Subscribe to our newsletter at cycliq.com for all the latest product news.

TECHNICAL DATA

Name: Fly6 CE GEN3

Model: CE603

Product Description: HD bike camera + rear light

Height: 71mm
Width: 35mm
Depth: 40mm

Weight: Approx. 75.5g

Power Source: Rechargeable Lithium ion Battery

Battery Size: 2000mAh (approx. 5 hours in camera only mode)

Watt Hours: 7.6Wh

Voltage: 3.7v

Ingress Protection: IP56 (pending certification)

Operating Temperature/Humidity: 0-45°C (32–113°F)

Storage Temperature/Humidity: 0-45°C (32–113°F)

FEDERAL COMMUNICATIONS COMMISSION (FCC) COMPLIANCE STATEMENT

This device complies with Part 15 of the FCC Rules. Operation is subject to the following two conditions: (1) this device may not cause harmful interference, and (2) this device must accept any interference received, including interference that may cause undesired operation. Changes or modifications not expressly approved by the party responsible for compliance could void the user's authority to operate the equipment.

This equipment has been tested and found to comply with the limits for a Class B digital device, pursuant to Part 15 of the FCC Rules. These limits are designed to provide reasonable protection against harmful interference in a residential installation. This equipment generates, uses and can radiate radio frequency energy and, if not installed and used in accordance with the instructions, may cause harmful interference to radio communications. However, there is no guarantee that interference will not occur in a particular installation.

If this equipment does cause harmful interference to radio or television reception, which can be determined by turning the equipment off and on, the user is encouraged to try to correct the interference by one or more of the following measures:

- Reorient or relocate the receiving antenna.
- Increase the separation between the equipment and receiver.
- Connect the equipment into an outlet on a circuit different from that to which the receiver is connected.
- Consult the dealer or an experienced radio/TV technician for help.

To maintain compliance with FCC's RF Exposure guidelines, This equipment should be installed and operated with minimum distance between 20cm the radiator your body: Use only the supplied antenna.

INDUSTRY CANADA (IC) COMPLIANCE STATEMENT

This device complies with Industry Canada license-exempt RSS standard(s). Operation is subject to the following two conditions:

(1) this device may not cause interference; and

(2) this device must accept any interference, including interference that may cause undesired operation of the device.

Le présent appareil est conforme aux CNR d'Industrie Canada applicables aux appareils radio exempts de licence. L'exploitation est autorisée aux deux conditions suivantes:

(1) l'appareil ne doit pas produire de brouillage, et

(2) l'utilisateur de l'appareil doit accepter tout brouillage

radioélectrique subi, même si le brouillage est susceptible d'en compromettre le fonctionnement.

Note

This equipment has been tested and found to comply with the limits for a Class B digital device, pursuant to Part 15 of the FCC Rules. These limits are designed to provide reasonable protection against harmful interference in a residential installation. This equipment generates, uses and can radiate radio frequency energy and, if not installed and used in accordance with the instructions, may cause harmful interference to radio communications.

REGULATORY INFORMATION

Caution

To maintain compliance with the RF exposure guidelines, place the unit at least 20cm from nearby persons.

Warning

Changes or modifications to this unit not expressly approved by the party responsible for compliance could void the user's authority to operate the equipment. Risk of explosion if battery is replaced by an incorrect type. Dispose of used batteries according to the instructions.

LIMITED WARRANTY

For comprehensive warranty information refer to http://www.cycliq.com/warranty

Cycliq customer support

Please go to support.cycliq.com for further information and support.

Caution

Cycliq recommends the following:

- Do not look directly at the light.
- Do not leave the light on when not in use.

PO Box 404

Subiaco WA 6904

Australia

Email: info@cycliq.com

CYCLIQ.COM

Fly6 CE603 User Guide - Version 3.05.07

Cycliq reserves the right, at its discretion, to change and modify portions of this User Guide.