2/F., Garment Centre,
576 Castle Peak Road, Kowloon,
Hong Kong.

Telephone: (852) 2173 8888
Facsimile: (852) 2785 5487
www.intertek.com

TEST REPORT

Report Number: 18030309HKG-001R1

Application For Original Grant of 47 CFR Part 15 Certification

Unlicensed Personal Communication Service Devices

FCC ID: 2AN7L-WPS05

This report supersedes previous report with report number 18030309HKG-001 dated April 10, 2018. Please refer TC-S18-0005 Letter issued on May 07, 2018 for amendment/ supersede notification.

Prepared and Checked by:	**Approved by:**
Signed On File Leung Chiu Kuen, Stanley Engineer	Digitally signed by Jess Tang Location: Intertek Testing Services Hong Kong Ltd. Tang Kwan Mo, Jess Lead Engineer Date: May 07, 2018

Intertek's standard Terms and Conditions can be obtained at our website http://www.intertek.com/terms/.
The test report only allows to be revised within the retention period unless further standard or the requirement was noticed.
This report is for the exclusive use of Intertek's Client and is provided pursuant to the agreement between Intertek and its Client. Intertek's responsibility and liability are limited to the terms and conditions of the agreement. Intertek assumes no liability to any party, other than to the Client in accordance with the agreement, for any loss, expense or damage occasioned by the use of this report. Only the Client is authorized to permit copying or distribution of this report and then only in its entirety. Any use of the Intertek name or one of its marks for the sale or advertisement of the tested material, product or service must first be approved in writing by Intertek. The observations and test results in this report are relevant only to the sample tested. This report by itself does not imply that the material, product, or service is or has ever been under an Intertek certification program.
© 2017 Intertek

TEST REPORT

GENERAL INFORMATION

Grantee:	Comda Technology Corporation
Grantee Address:	9F-2., No. 738, Zhongzheng Rd., Zhonghe Dist., New Taipei City 235, Taiwan (R.O.C.)
FCC Specification Standard:	FCC Part 15, October 1, 2016 Edition
FCC ID:	2AN7L-WPS05
Brand Name:	ATIVA, COMDA, VogDUO
FCC Model(s):	WPS05-XXX, WPS05
Type of EUT:	Unlicensed Personal Communications Service Devices
Description of EUT:	DECT 6.0 3 Handset Cordless Answering System with Speakerphones
Serial Number:	N/A
Sample Receipt Date:	March 09, 2018
Date of Test:	March 09 - 16, 2018
Report Date:	May 07, 2018
Environmental Conditions:	Temperature: +10 to 40°C Humidity: 10 to 90%

TEST REPORT

TABLE OF CONTENTS

1.0 TEST RESULTS SUMMARY & STATEMENT OF COMPLIANCE 5
1.1 Summary of Test Results 5
1.2 Statement of Compliance 6

2.0 GENERAL DESCRIPTION 7
2.1 Product Description 7
2.2 Technical Description 7
2.3 Test Methodology 7
2.4 Test Facility 7

3.0 SYSTEM TEST CONFIGURATION 8
3.1 Justification 8
3.2 Radiated Emission Test Setup 9
3.3 AC Line Conducted Emission Test Setup 10
3.4 Conducted Emission Test Configuration 11
3.5 Conducted Monitoring and Operational Test Configuration 11
3.6 EUT Exercising Software 11
3.7 Details of EUT and Description of Accessories 12
3.8 Measurement Uncertainty 12

4.0 MEASUREMENT RESULTS 13
4.1 Antenna Requirement 13
4.2 Digital Modulation Techniques 13
4.3 Emission Bandwidth 14
4.4 Directional Gain of the Antenna 17
4.5 Peak Transmit Power 18
4.6 Power Spectral Density 21
4.8 Unwanted Emission Inside the Sub-Band 25
4.9 Emissions Outside the Sub-Band 29
4.9.1 Radiated Emissions Configuration Photographs 30
4.9.2 Radiated Emissions Data 30
4.9.3 Field Strength Calculation 37
4.9.4 Average Factor Calculation and Transmitter ON Time Measurements 38
4.10 AC Power Line Conducted Emissions 39
4.10.1 AC Power Line Conducted Emissions Configuration Photographs 40
4.10.2 AC Power Line Conducted Emissions Data 40
4.11 Frame Repetition Stability 43
4.12 Frame Period and Jitter 44
4.13 Carrier Frequency Stability 45
4.14 Monitoring Threshold 47
4.14.1 Monitoring Threshold Limit 48
4.14.2 Least Interfered Channel 49

TEST REPORT

4.14.2.1 Least Interfered Channel (LIC) Selection 50
4.14.2.2 Least Interfered Channel (LIC) Confirmation 52
4.14.2.3 Maximum Spectrum Occupancy.....52
4.15 Monitoring Time.....53
4.16 Maximum Transmit Period 54
4.17 System Acknowledgement 55
4.18 Random Waiting.....57
4.19 Monitoring Bandwidth 58
4.20 Maximum Reaction Time.....60
4.21 Monitoring Antenna 60
4.22 Duplex Connections.....61
4.23 Alternative Monitoring Interval for Co-located Device 63
4.24 Fair Access 63

5.0 EQUIPMENT LIST 64

TEST REPORT

1.0 TEST RESULTS SUMMARY & STATEMENT OF COMPLIANCE

1.1 Summary of Test Results

Test Items	General Technical Requirements		Results	Details See Section
	FCC Part 15 Section	Test Procedure ANSI C63.17 / ANSI C63.4*		
Antenna Requirement	15.317	---	Pass	4.1
Digital Modulation Techniques	15.319(b)	6.1.4	Pass	4.2
Occupied/Emission Bandwidth	15.323(a)	6.1.3	Pass	4.3
Directional Gain of the Antenna	15.319(e)	4.3.1	Pass	4.4
Peak Transmit Power	15.319(c)	6.1.2	Pass	4.5
Power Spectral Density	15.319(d)	6.1.5	Pass	4.6
Automatic Discontinuation of Transmission	15.319(f)	---	Pass	4.7
AC Power Line Conducted Emissions from EUT	15.315	7 *	Pass	4.10
Security Code Information	---	---	Pass	2.2

TEST REPORT

1.1 Summary of Test Results (continued)

Specific Requirements for UPCS Device				
Test Items	**FCC Part 15 Section**	**Test Procedure ANSI C63.17**	**Results**	**Details See Section**
Unwanted Emission Inside the Sub-Band	15.323(d)	6.1.6.1	Pass	4.8
Emissions Outside the Sub-Band	15.323(d)	6.1.6.2	Pass	4.9
Frame Repetition Stability	15.323(e)	6.2.2	Pass	4.11
Frame Period and Jitter	15.323(e)	6.2.3	Pass	4.12
Carrier Frequency Stability	15.323(f)	6.2.1	Pass	4.13
Monitoring Threshold Limit	15.323(c2&c9)	7.3.1	NA	4.14.1
Least Interfered Channel (LIC) Selection	15.323(c)(5)	7.3.2	Pass	4.14.2.1
Least Interfered Channel (LIC) Confirmation	15.323(c)(5)	7.3.2	Pass	4.14.2.2
Maximum Spectrum Occupancy	15.323(c)(5)	---	Pass	4.14.2.3
Monitoring Time	15.323(c)(1)	7.3.3	Pass	4.15
Maximum Transmit Period	15.323(c)(3)	8.2.2	Pass	4.16
System Acknowledgement	15.323(c4)	8.1 or 8.2	Pass	4.17
Random Waiting	15.323(c)(6)	8.1.2 or 8.1.3	Pass	4.18
Monitoring Bandwidth	15.323(c)(7)	7.4	Pass	4.19
Maximum Reaction Time	15.323(c)(7)	7.5	Pass	4.20
Monitoring Antenna	15.323(c)(8)	4	Pass	4.21
Duplex Connections	15.323(c)(10)	8.3	Pass	4.22
Alternative Monitoring Interval for Co-located Device	15.323(c)(11)	8.4	NA	4.23
Fair Access	15.323(c)(12)	---	Pass	4.24

1.2 Statement of Compliance

The equipment under test is found to be complying with the following standards:

FCC Part 15, October 1, 2016 Edition

TEST REPORT

2.0 GENERAL DESCRIPTION

2.1 Product Description

The WPS05 is a DECT 6.0 3 Handset Cordless Answering System with Speakerphones. It operates at frequency range of 1921.536MHz to 1928.448MHz with 5 channels (1921.536MHz, 1923.264MHz, 1924.992MHz, 1926.720MHz and 1928.448MHz). The Base Unit is powered by an adaptor 100-240VAC 50/60Hz 150mA. The Handset is powered by a Ni-MH type rechargeable battery pack (1.2V 300mAh).

The antenna used in base unit and handset is integral, and the test sample is a prototype.

The Model(s): WPS05-XXX is the same as the Model: WPS05in electronics/electrical designs including software & firmware, PCB layout and construction design/physical design/enclosure. The only differences between these models are color, trade name and packing configuration to be sold for marketing purpose. Suffix ("XXX") indicates different color code, and different packing configuration.

Connection between the device and the telephone network is accomplished through the use of USOC RJ11C in the 2-wire loop calling central office line.

2.2 Technical Description

The circuit description and digital modulation techniques description are saved with filename: descri.pdf.

2.3 Test Methodology

The radiated emission measurements for unintentional radiator (if any) and AC power line-conducted emission measurements were performed according to the test procedures specified in ANSI C63.4 (2014). The radiated emission measurements for intentional radiator contained in UPCS device, conducted emission measurements, Listen Before Transmit (LBT) tests, Time Frame and Frequency Stability tests were performed according to the test procedures specified in ANSI C63.17 (2013). All radiated measurements were performed in radiated emission test site. Preliminary scans were performed in the radiated emission test site only to determine worst case modes. All radiated tests were performed at an antenna to EUT distance of 3 meters, unless stated otherwise in the "Justification Section" of this Application. All other measurements were made in accordance with the procedures in 47 CFR Part 2.

2.4 Test Facility

The radiated emission test site, AC power line conducted measurement facility and antenna port conducted measurement facility used to collect the radiated data, AC Power Line conducted data, and conductive data are at Intertek Testing Services Hong Kong Ltd., which is located at Workshop No. 3, G/F., World-Wide Industrial Centre, 43-47 Shan Mei Street, Fo Tan, Sha Tin, N.T., Hong Kong. This test facility and site measurement data have been fully placed on file with FCC.

TEST REPORT

3.0 SYSTEM TEST CONFIGURATION

3.1 Justification

For emissions testing, the equipment under test (EUT) was set up to transmit continuously in burst mode with pseudo-random data to simplify the measurement methodology. Care was taken to ensure proper power supply voltages during testing. During testing, all cables (if any) were manipulated to produce worst-case emissions.

The Base Unit was powered by a 100-240VAC 50/60Hz 150mA to 6.0VDC 500mA adaptor. The handset was powered by a fully charged battery.

For the measurements, the EUT was attached to a plastic stand if necessary and placed on the wooden turntable. If the EUT is attached to accessories, they were connected and operational (as typical as possible).

The signal was maximized through rotation and placement in the three orthogonal axes. The antenna height and polarization were varied during the search for maximum signal level. The antenna height was varied from 1 to 4 meters. Detector function was in peak mode. Radiated emissions are taken at three meters unless the signal level was too low for measurement at that distance. If necessary, a pre-amplifier was used and/or the test was conducted at a closer distance.

For UPCS transmitter radiated measurement, the spectrum analyzer resolution bandwidth was approximately 1% of EUT emission bandwidth, unless otherwise specified.

As the base unit has 2 antennas, both have been checked. While conducting the test on one of antennas, another one was being disable its transmission. The data in this report represented the worst-case.

Radiated emission measurements for UPCS transmitter were performed from the lowest radio frequency signal generated in the device which is greater than 9 kHz to the tenth harmonic of the highest fundamental frequency or to 40 GHz, whichever is lower.

For AC line conducted emission test, the EUT along with its peripherals were placed on a 1.0m(W)x1.5m(L) and 0.8m in height wooden table and the EUT was adjusted to maintain a 0.4 meter space from a vertical reference plane. The EUT was connected to power mains through a line impedance stabilization network (LISN), which provided 50ohm coupling impedance for measuring instrument. The LISN housing, measuring instrument case, reference ground plane, and vertical ground plane were bounded together. The excess power cable between the EUT and the LISN was bundled.

All connecting cables of EUT and peripherals were manipulated to find the maximum emission.

All relevant operation modes have been tested, and the worst case data is included in this report.

TEST REPORT

3.2 Radiated Emission Test Setup

The figure below shows the test setup, which is utilized to make these measurements.

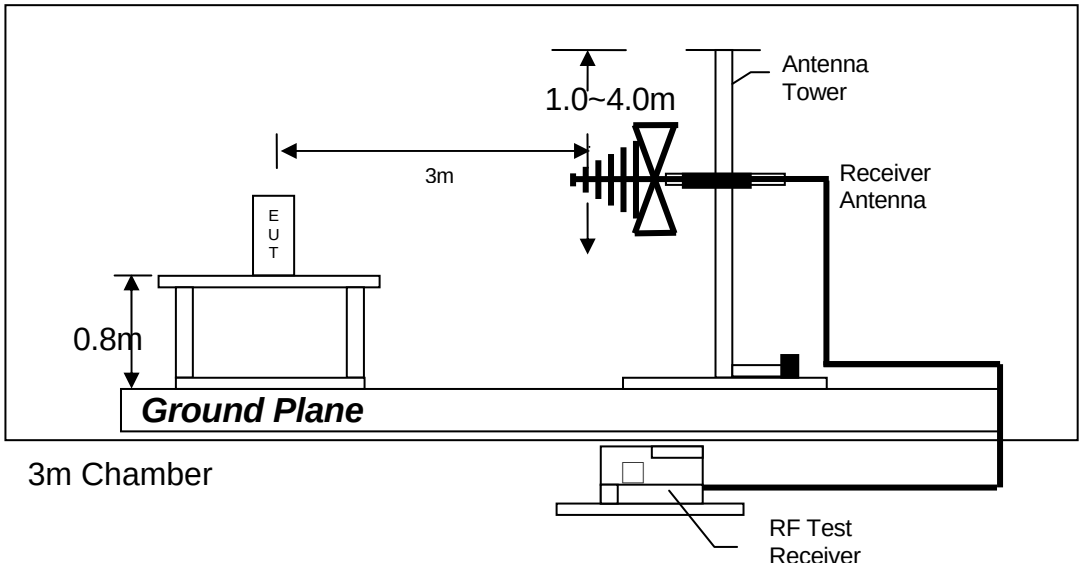

Test setup of radiated emissions up to 1GHz

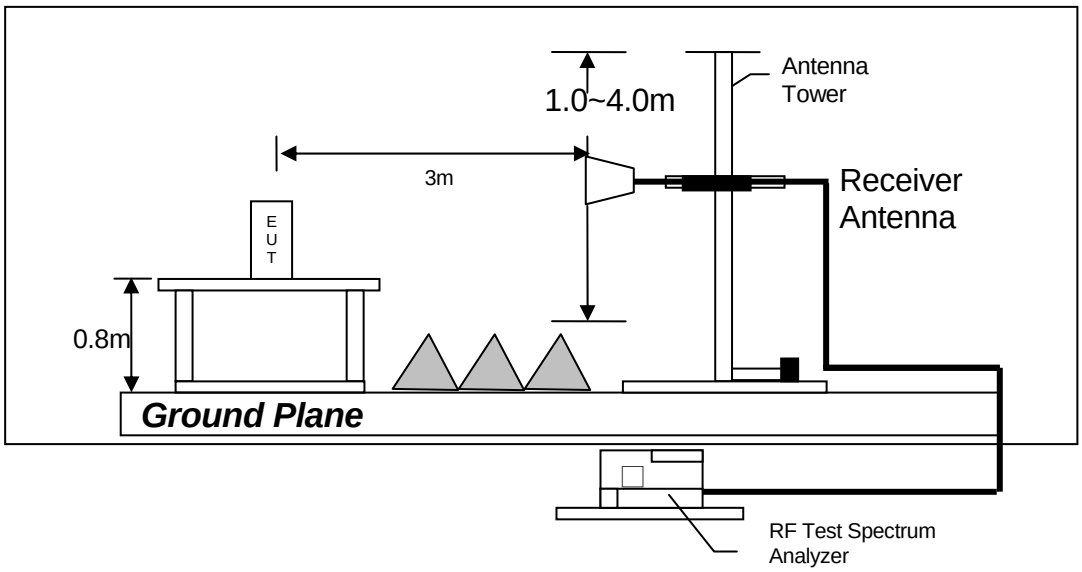

Test setup of radiated emissions above 1GHz

Figure 3.2.1

TEST REPORT

3.3 AC Line Conducted Emission Test Setup

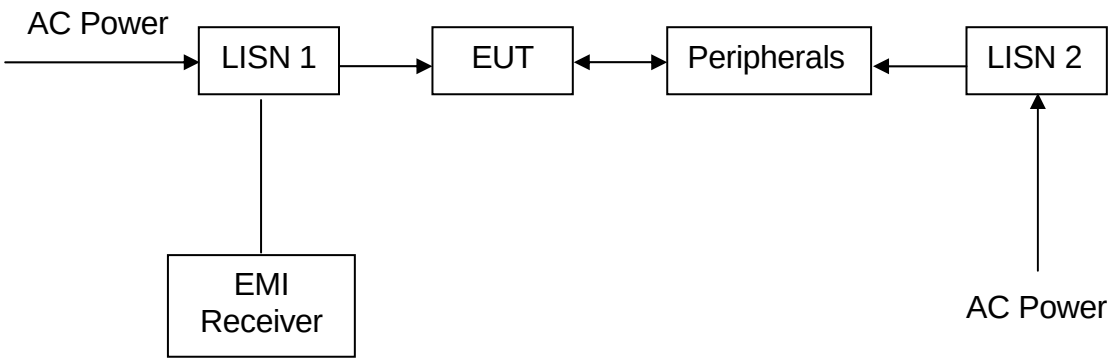

Figure 3.3.1

TEST REPORT

3.4 Conducted Emission Test Configuration

The setup and equipment setting were made in accordance with ANSI C63.17. The antenna of EUT transmitter was replaced by a coaxial cable. The impendence matching of connection, cable loss and external RF attenuator are taken into account. The EUT was arranged to communicate via a fixed carrier frequency between its transmitter and a companion device. The transmission was configured in burst mode with pseudo-random data as typical as normal operation.

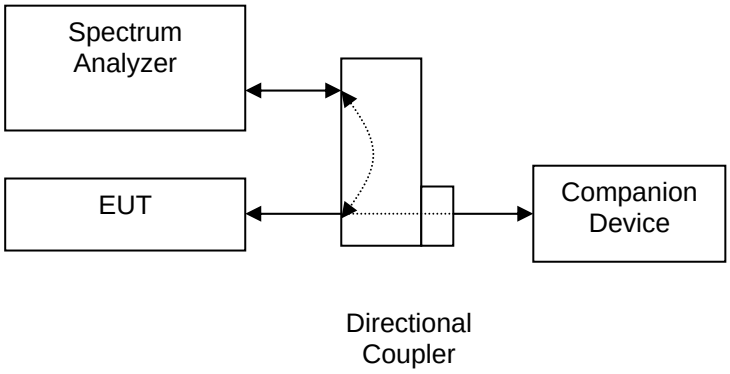

Figure 3.4.1

3.5 Conducted Monitoring and Operation Test Configuration

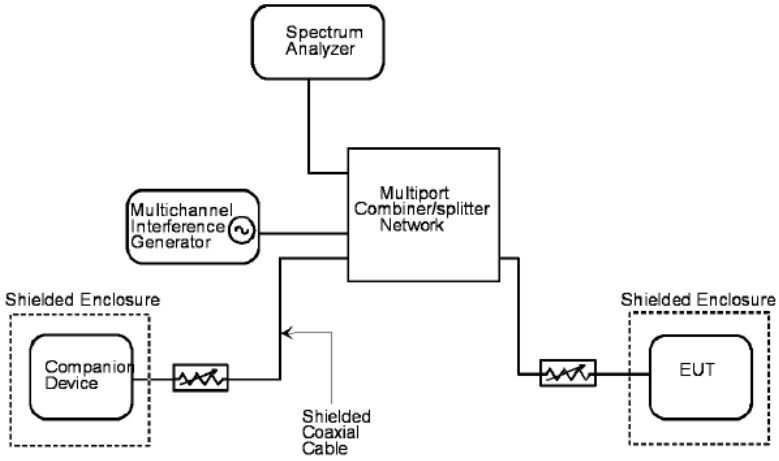

Figure 3.5.1

3.6 EUT Exercising Software

The EUT exercise program (if any) used during radiated and conducted testing was designed to exercise the various system components in a manner similar to a typical use.

TEST REPORT

3.7 Details of EUT and Description of Accessories

Details of EUT:

An AC adaptor and/or a battery (provided with the unit) were used to power the device. Their descriptions are listed below.

(1) Base Unit: An AC adaptor (100-240VAC 50/60Hz 150mA to 6.0VDC 500mA, Model: S003GU0600050, Brand: Ten Pao) (Supplied by Client)
(2) Handset: A Ni-MH type rechargeable battery (1.2V 300mAh) (Supplied by Client)

Description of Accessories:

(1) Telecommunication cable with RJ11C connectors (1m, unshielded), terminated (Supplied by Intertek)

3.8 Measurement Uncertainty

When determining of the test conclusion, the Measurement Uncertainty of test has been considered. The values of the Measurement uncertainty for radiated emission test, AC line conducted emission test and RF conducted test, frequency stability and timing jitter are ± 5.3dB, ± 4.2dB, ±1dB, ±23Hz, 0.1µs respectively.

Uncertainty and Compliance - Unless the standard specifically states that measured values are to be extended by the measurement uncertainty in determining compliance, all compliance determinations are based on the actual measured value.

TEST REPORT

4.0 MEASUREMENT RESULTS

4.1 Antenna Requirement, FCC Rule 15.317:

EUT must meet the antenna requirement of FCC Rule 15.203.

[×] EUT uses permanently attached antenna(s) which is considered sufficient to comply with the provisions of this rule. Please refer to internal photos.pdf for more details.

[ ] EUT uses unique antenna jack(s) or electrical connector(s) which is considered sufficient to comply with the provisions of this rule. Please refer to internal photos.pdf for more details.

4.2 Digital Modulation Techniques, FCC Rule 15.319(b):

All transmissions must use only digital modulation techniques.

The requirements are made in accordance with ANSI C63.17 sub-clause 6.1.4.

Attestation:

Please refer to the technical description(descri.pdf) or relevant DECT standards for more details.

TEST REPORT

4.3 Emission Bandwidth, FCC Rule 15.323(a):

Operation shall be contained within the 1920 – 1930 MHz band. The emission bandwidth (*B*) shall be less than 2.5 MHz and greater than 50 kHz.

Measurements are made in accordance with ANSI C63.17 sub-clause 6.1.3. Test setup is shown in section 3.4 Figure 3.4.1.

Test Results:

I. Base unit - Traffic Carrier

Channel	Channel Frequency (MHz)	Measuring Signal Level	Measured Emission Bandwidth (MHz)	Results
Lowest	1921.536	26 dB down	1.49	Pass
Highest	1928.448	26 dB down	1.47	Pass

II. Handset - Traffic Carrier

Channel	Channel Frequency (MHz)	Measuring Signal Level	Measured Emission Bandwidth (MHz)	Results
Lowest	1921.536	26 dB down	1.47	Pass
Highest	1928.448	26 dB down	1.49	Pass

The plots of emission bandwidth are saved as below.

TEST REPORT

PLOTS OF EMISSION BANDWIDTH

Base unit, Lowest channel, Traffic carrier

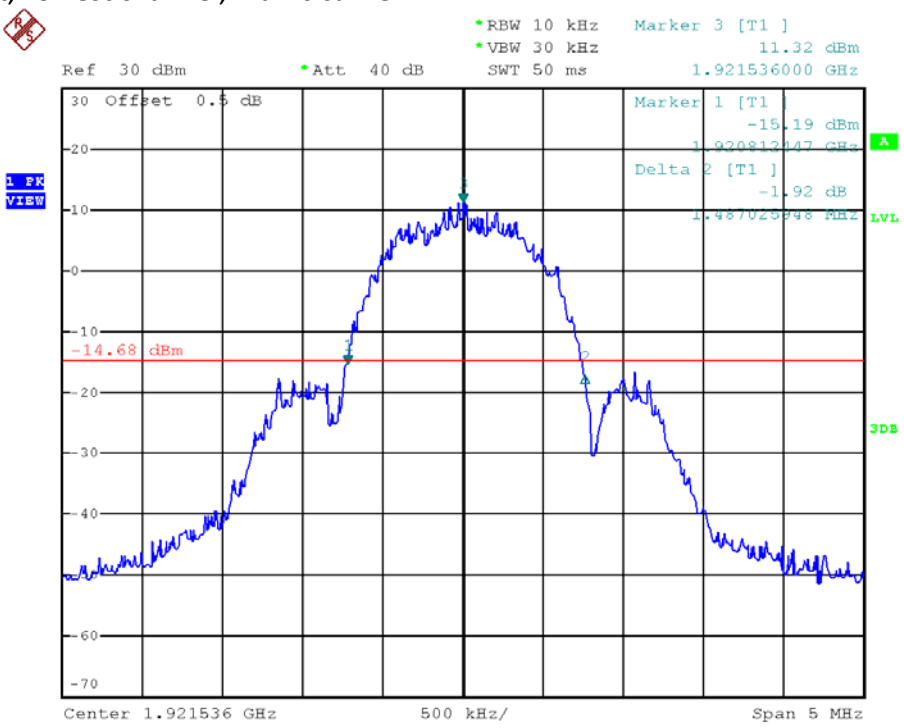

Base unit, Highest channel, Traffic carrier

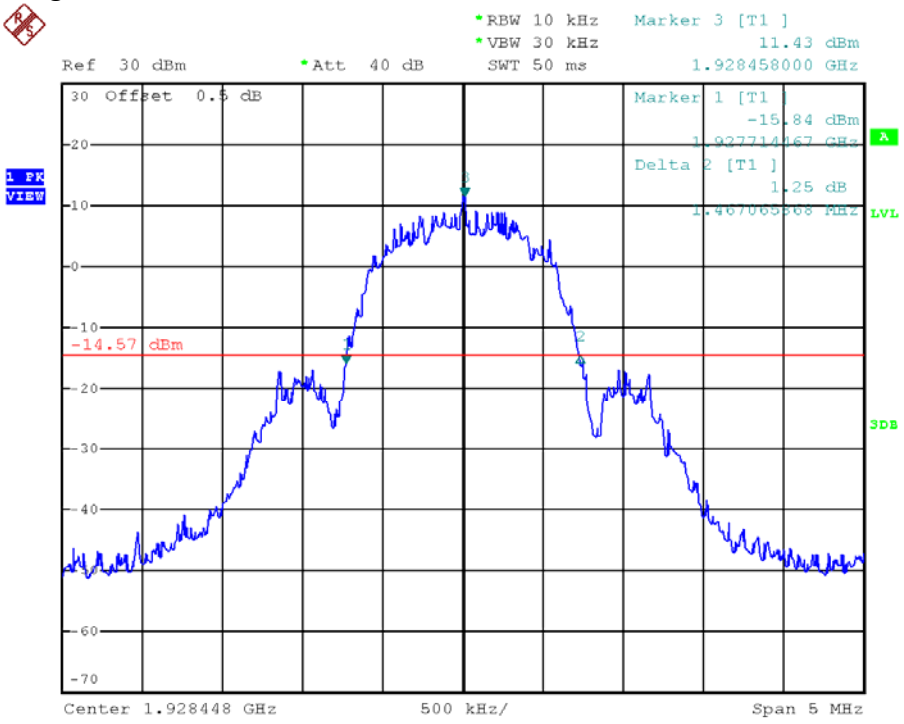

TEST REPORT

PLOTS OF EMISSION BANDWIDTH

Handset unit, Lowest channel, Traffic carrier

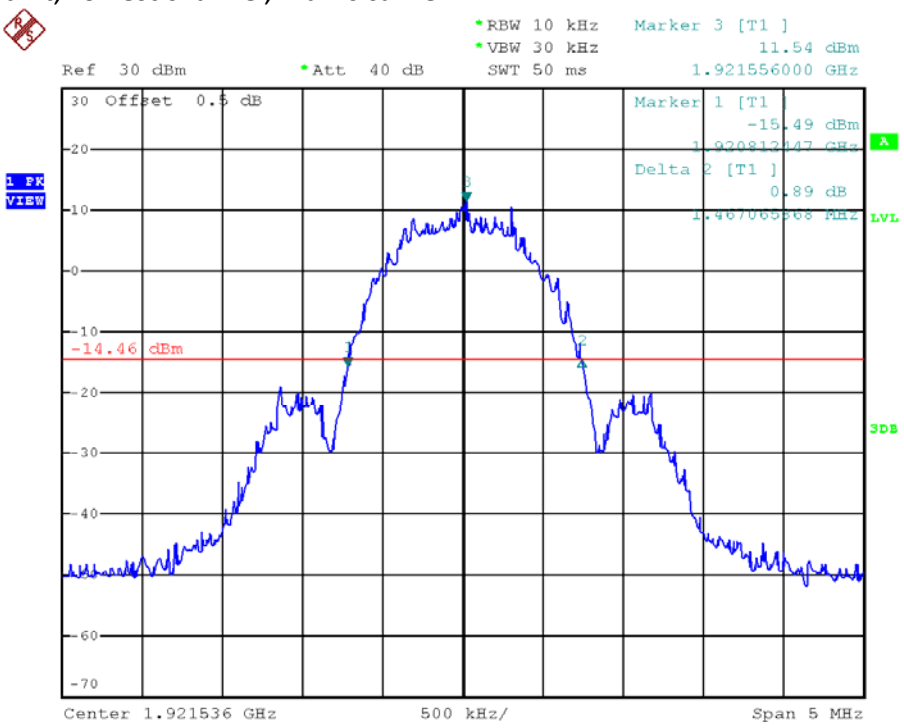

Handset unit, Highest channel, Traffic carrier

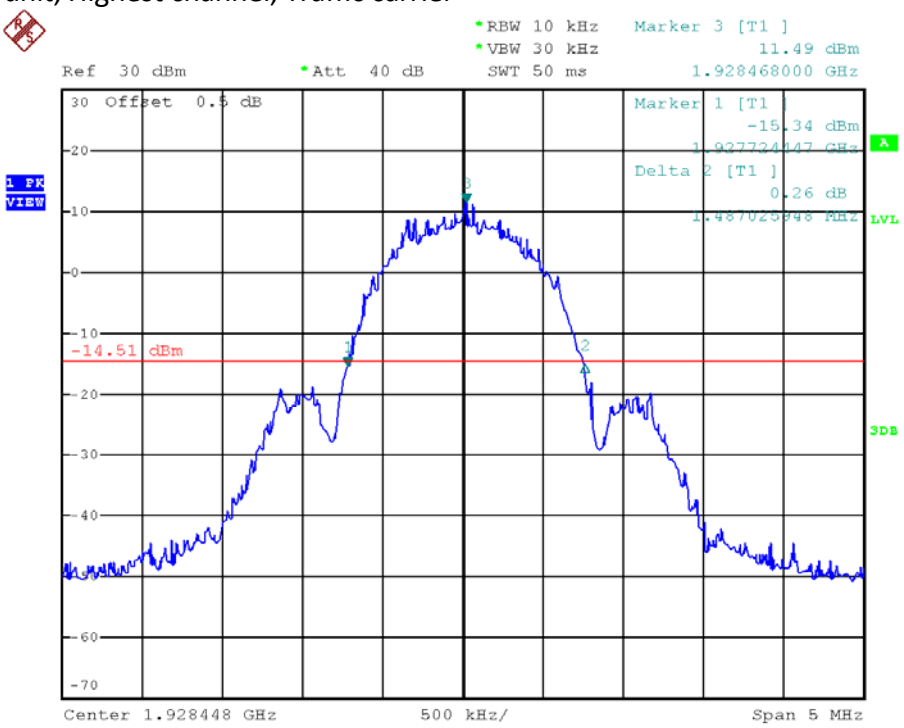

TEST REPORT

4.4 Directional Gain of the Antenna, FCC Rule FCC 15.319(e):

The peak transmit power shall be reduced by the amount in dB that the maximum directional gain of the antenna exceeds 3 dBi.

The requirements are made in accordance with ANSI C63.17 sub-clause 4.3.1.

[×] Manufacturer declares that the directional gain of the antenna is less than or equal to 3dBi. No peak transmit power reduction is required.

[ ] Manufacturer declares that the directional gain of the antenna is greater than 3dBi. The peak transmit power shall be reduced by ___ dB.

TEST REPORT

4.5 Peak Transmit Power, FCC Rule 15.319(c):

The peak transmit power (P_{EUT}) shall not exceed 100μW multiplied by the square root of the emission bandwidth (B) in Hz or 5 $\log_{10} B$ – 10 dBm. The peak transmit power shall be reduced by the amount in dB that the maximum directional gain of the antenna exceeds 3 dBi.

Measurements are made in accordance with ANSI C63.17 sub-clause 6.1.2. Test setup is shown in section 3.4 Figure 3.4.1. The cable loss and/or external attenuation are included in OFFSET function of spectrum analyzer.

Calculation of Peak Transmit Power Limit (P_{max}):

[×] $P_{max} = 5 \log_{10} B - 10$ dBm when $G_A \leq 3$dBi

[ ] $P_{max} = 5 \log_{10} B - 10$ dBm – (G_A – 3dBi) when $G_A > 3$dBi

Where G_A = EUT Antenna Gain: 0 dBi for Base Unit
= EUT Antenna Gain: 0 dBi for Handset
B = Measured Emission Bandwidth

Test Results:

I. Base unit - Traffic Carrier

Channel	Channel Frequency (MHz)	Measured Peak Transmit Power (dBm)	Limit (dBm)	Results
Lowest	1921.536	20.39	20.87	Pass
Highest	1928.448	20.45	20.84	Pass

II. Handset - Traffic Carrier

Channel	Channel Frequency (MHz)	Measured Peak Transmit Power (dBm)	Limit (dBm)	Results
Lowest	1921.536	20.29	20.84	Pass
Highest	1928.448	20.26	20.87	Pass

The plots of peak transmit power are saved as below.

TEST REPORT

PLOTS OF PEAK TRANSMIT POWER

Base unit, Lowest channel, Traffic carrier

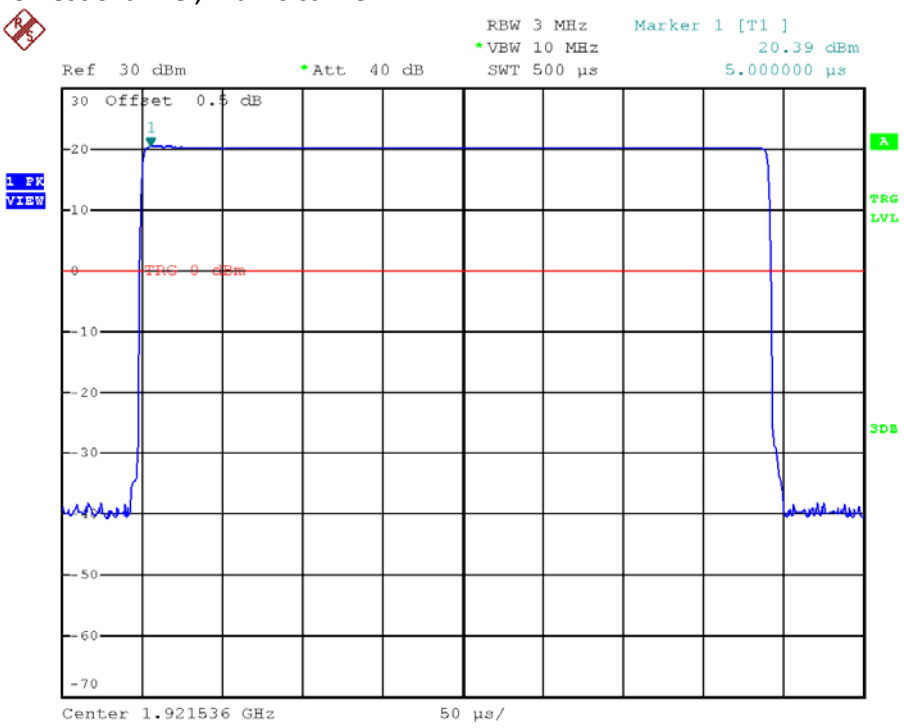

Base unit, Highest channel, Traffic carrier

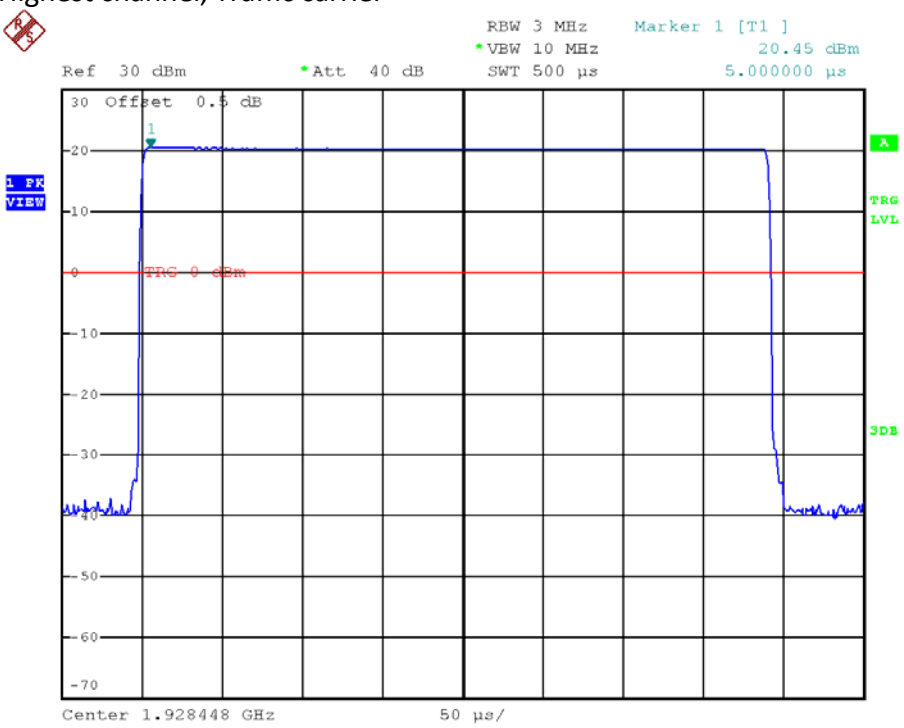

TEST REPORT

PLOTS OF PEAK TRANSMIT POWER

Handset unit, Lowest channel, Traffic carrier

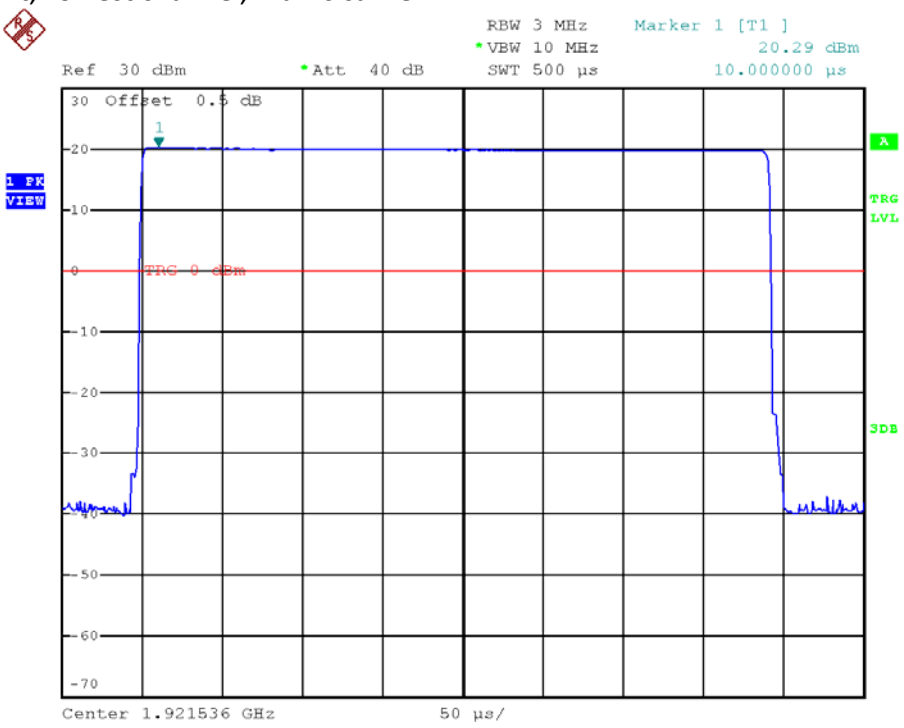

Handset unit, Highest channel, Traffic carrier

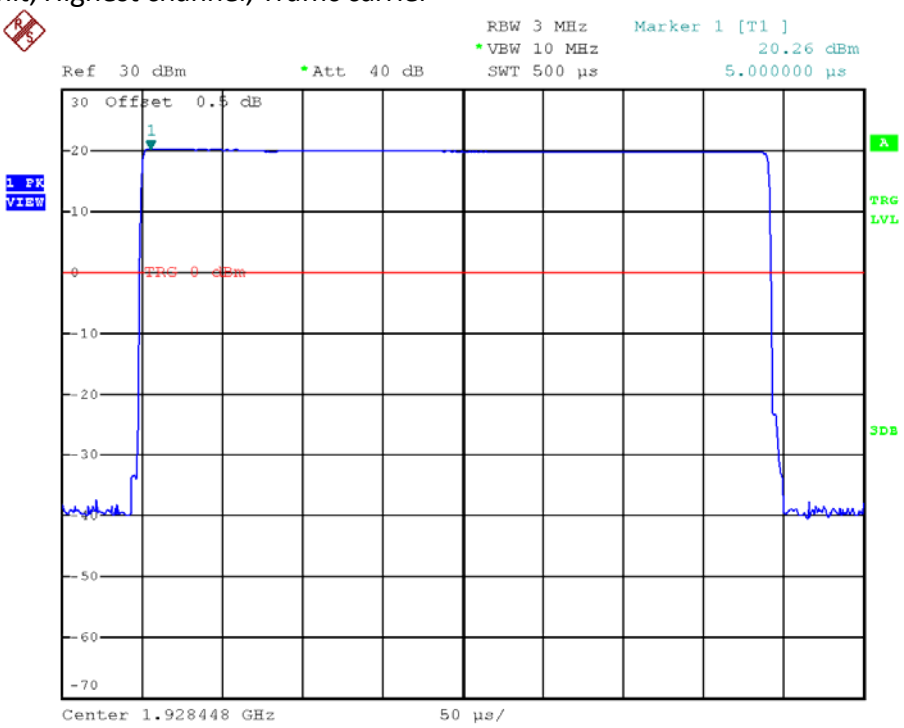

TEST REPORT

4.6 Power Spectral Density, FCC Rule 15.319(d):

Power spectral density shall not exceed 3 mW (4.8dBm) in any 3 kHz bandwidth as measured with a spectrum analyzer having a resolution bandwidth of 3 kHz.

Measurements are made in accordance with ANSI C63.17 sub-clause 6.1.5. Test setup is shown in section 3.4 Figure 3.4.1.

Test Results:

I. Base unit - Traffic Carrier

Channel	Channel Frequency (MHz)	Measured Power Spectral Density (dBm/3kHz)	Limit (dBm/3 kHz)	Results
Lowest	1921.536	-5.9	4.8	Pass
Highest	1928.448	-5.1	4.8	Pass

II. Handset - Traffic Carrier

Channel	Channel Frequency (MHz)	Measured Power Spectral Density (dBm/3kHz)	Limit (dBm/3 kHz)	Results
Lowest	1921.536	-3.4	4.8	Pass
Highest	1928.448	-4.1	4.8	Pass

The plots of the power spectral density are as below.

TEST REPORT

PLOTS OF THE POWER SPECTRAL DENSITY

Base unit, Lowest channel, Traffic carrier

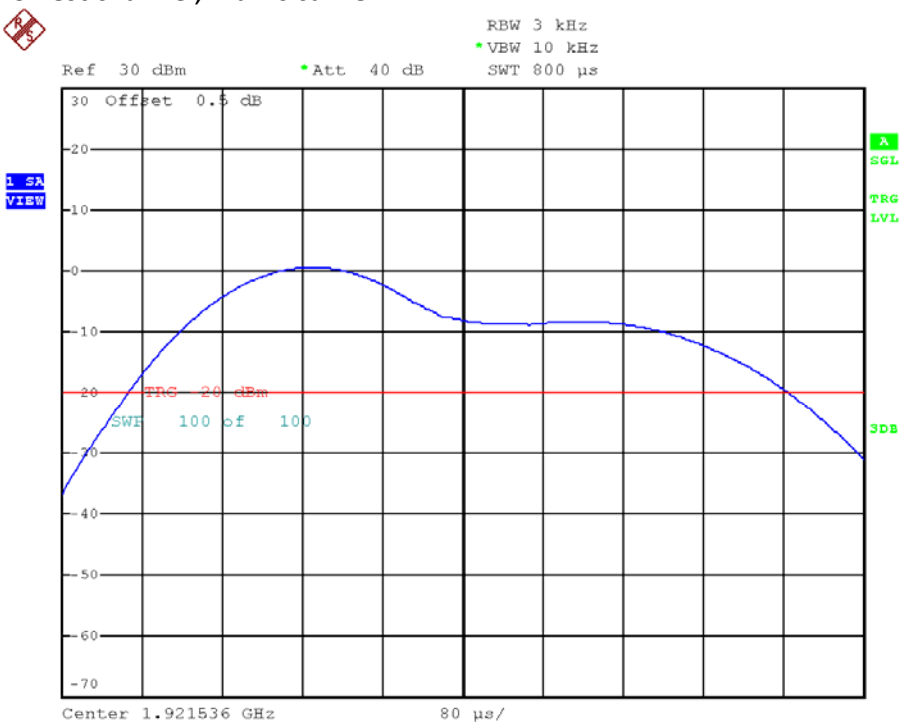

Base unit, Highest channel, Traffic carrier

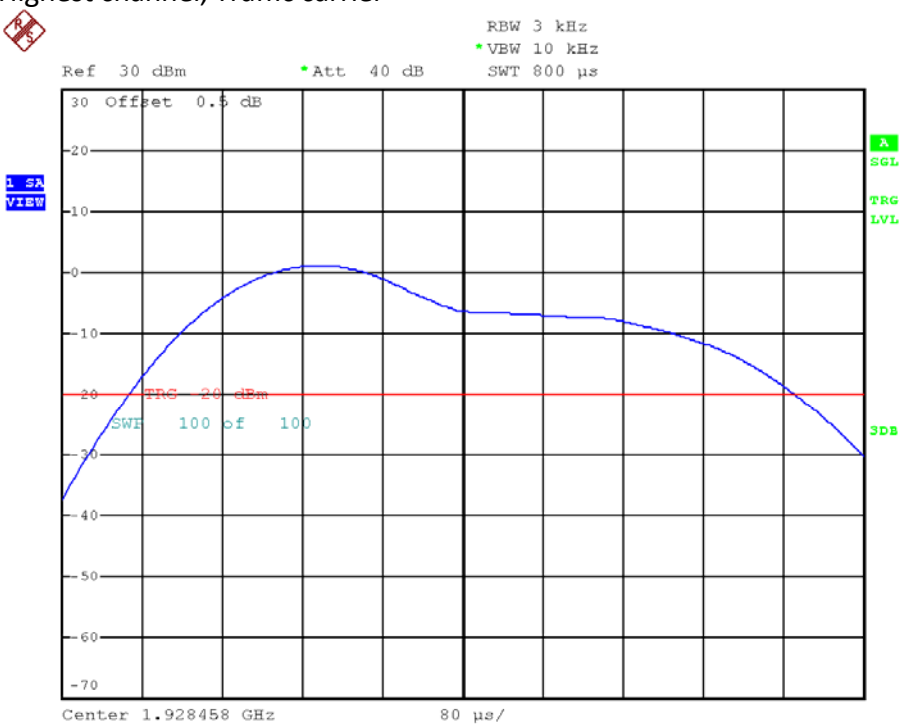

TEST REPORT

PLOTS OF THE POWER SPECTRAL DENSITY

Handset unit, Lowest channel, Traffic carrier

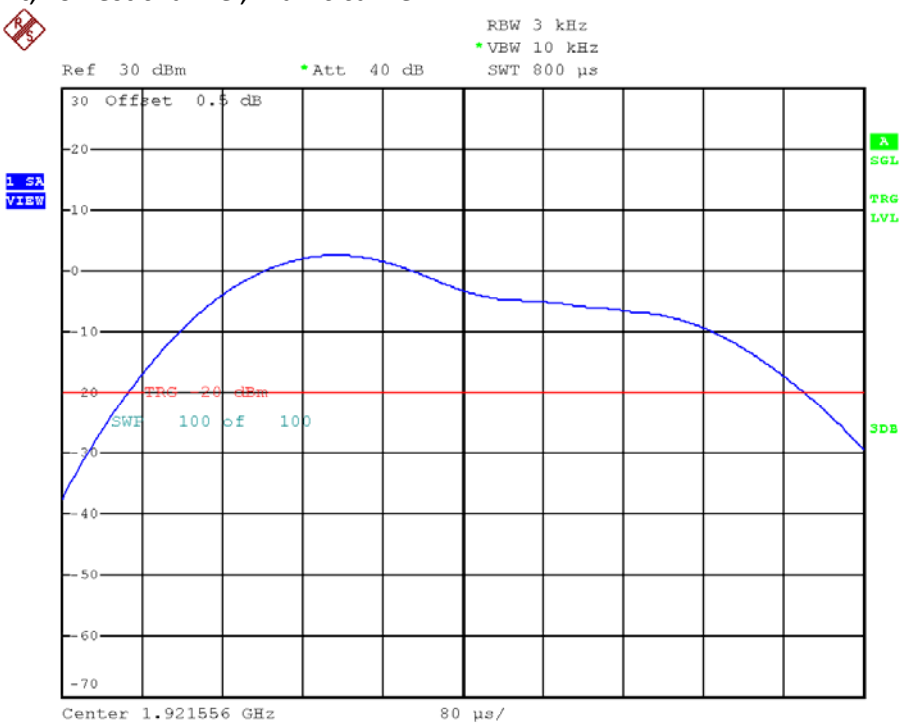

Handset unit, Highest channel, Traffic carrier

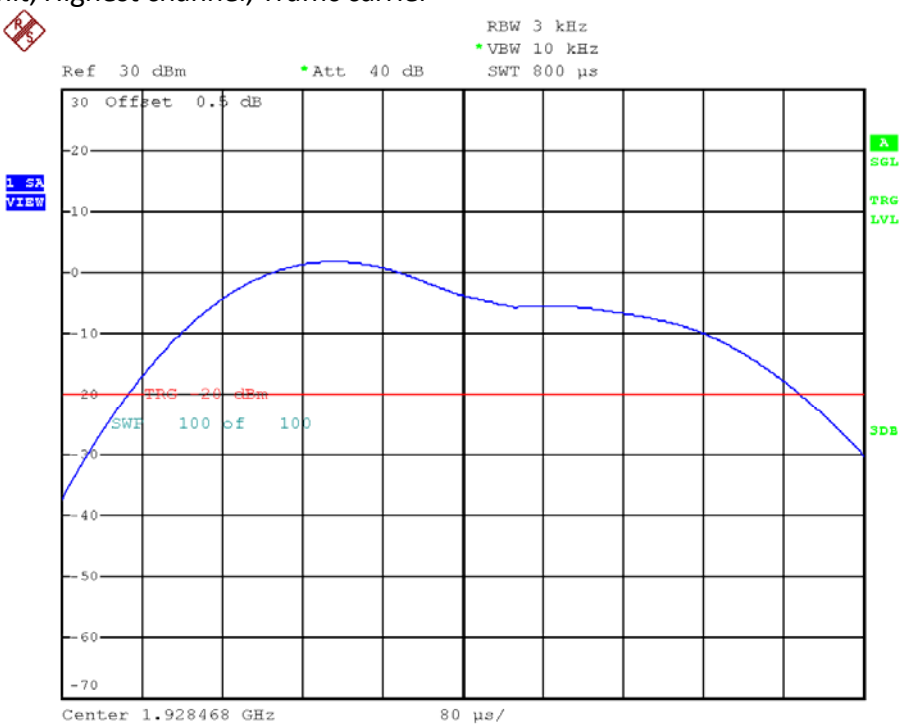

TEST REPORT

4.7 Automatic Discontinuation of Transmission, FCC Rule 15.319(f):

The EUT shall automatically discontinue transmission in case of either absence of information to transmit or operational failure. These provisions are not intended to preclude transmission of control and signaling information or use of repetitive codes used by certain digital technologies to complete frame or burst intervals.

The manufacturer declares that the EUT can automatically discontinue transmission in case of either absent information to transmit or operational failure. Please refer to the declaration letter for details, which is saved with filename: declaration.pdf.

TEST REPORT

4.8 Unwanted Emission Inside the Sub-Band, FCC Rule 15.323(d):

Emissions inside the sub-band must comply with the following emission mask:

1. In the bands between 1*B* and 2*B* measured from the center of the emission bandwidth, emission shall be at least 30 dB below the permitted peak transmit power.

2. In the bands between 2*B* and 3*B* measured from the center of the emission bandwidth, emission shall be at least 50 dB below the permitted peak transmit power.

3. In the bands between 3*B* and the band edge, emission shall be at least 60 dB below the permitted peak transmit power.

Where *B* = emission bandwidth in Hz

Measurements are made in accordance with ANSI C63.17 sub-clause 6.1.6.1. Test setup is shown in section 3.4 Figure 3.4.1

Test Results:

I. Base unit - Traffic Carrier

Channel	Channel Frequency (MHz)	Results
Lowest	1921.536	Pass
Middle	1924.992	Pass
Highest	1928.448	Pass

II. Handset - Traffic Carrier

Channel	Channel Frequency (MHz)	Results
Lowest	1921.536	Pass
Middle	1924.992	Pass
Highest	1928.448	Pass

The plots of the unwanted emission inside the sub-band are as below.

TEST REPORT

PLOTS OF THE UNWANTED EMISSION INSIDE THE SUB-BAND

Base unit, Lowest channel, Traffic carrier

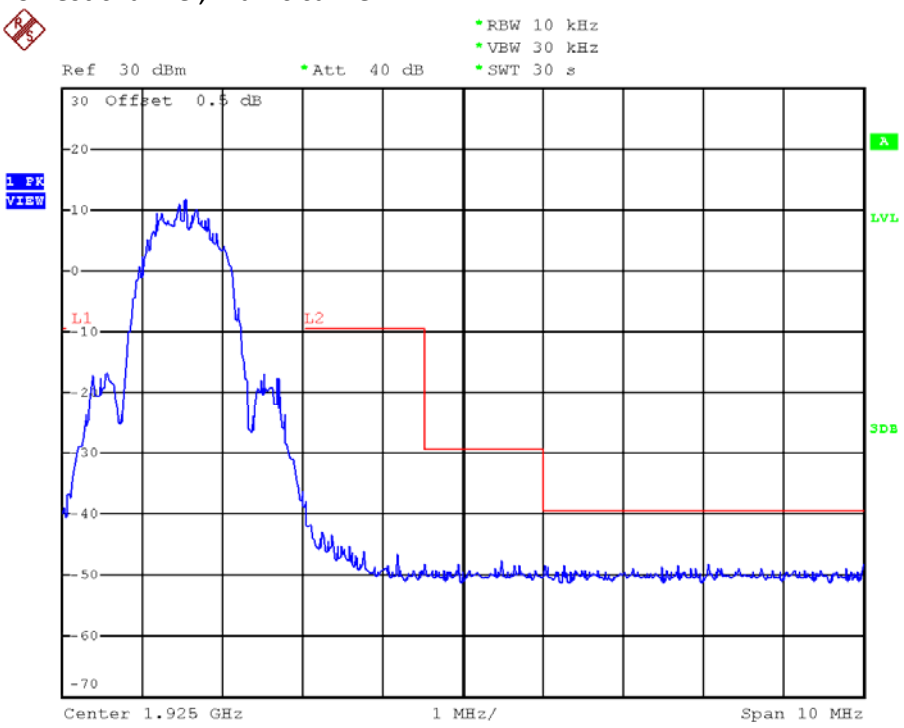

Base unit, Middle channel, Traffic carrier

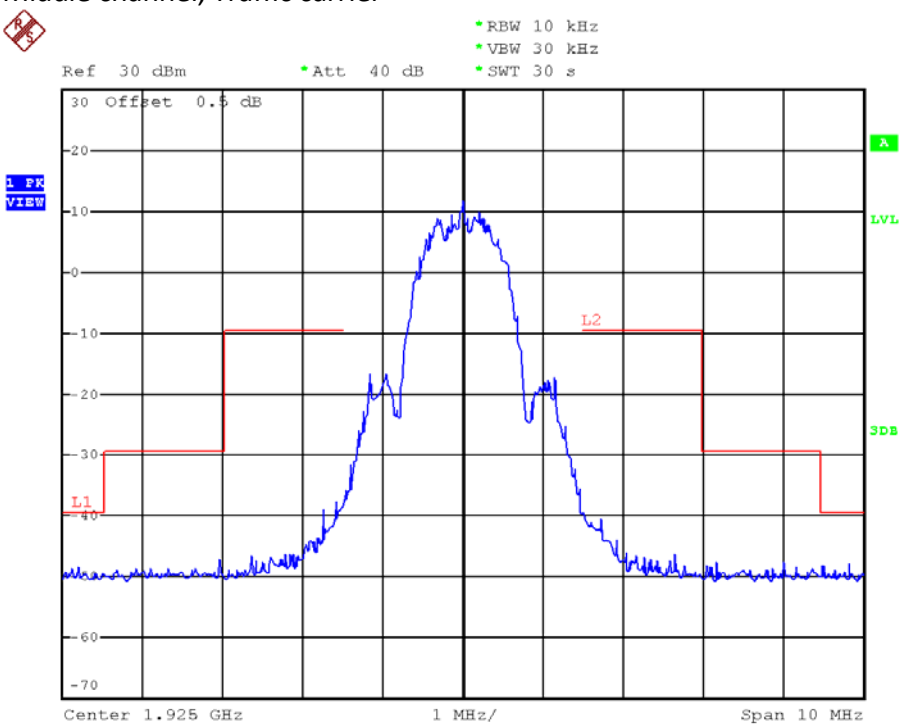

TEST REPORT

PLOTS OF THE UNWANTED EMISSION INSIDE THE SUB-BAND

Base unit, Highest channel, Traffic carrier

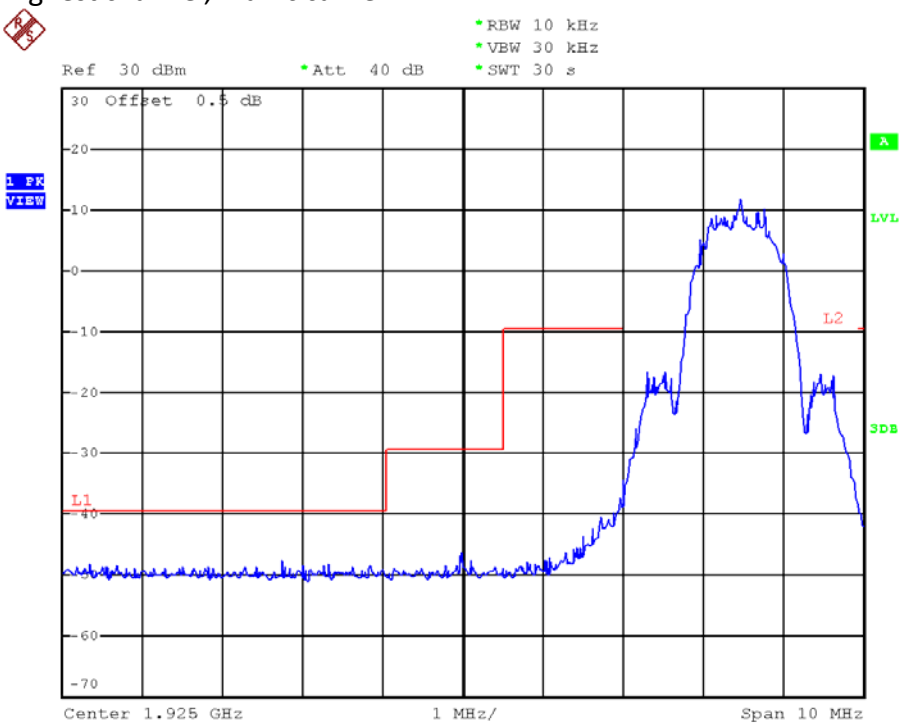

Handset unit, Lowest channel, Traffic carrier

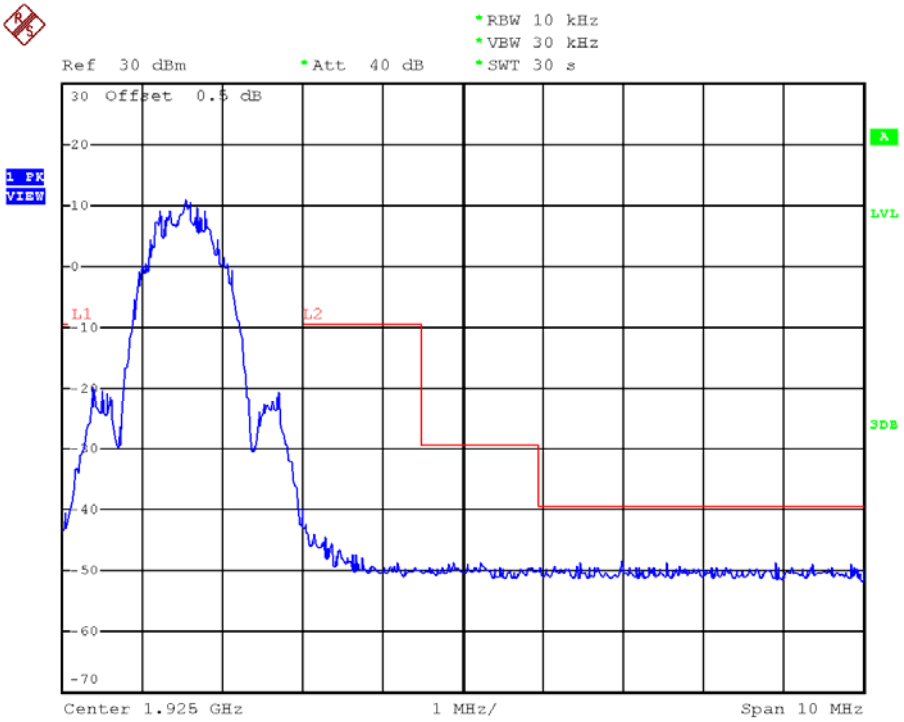

TEST REPORT

PLOTS OF THE UNWANTED EMISSION INSIDE THE SUB-BAND

Handset unit, Middle channel, Traffic carrier

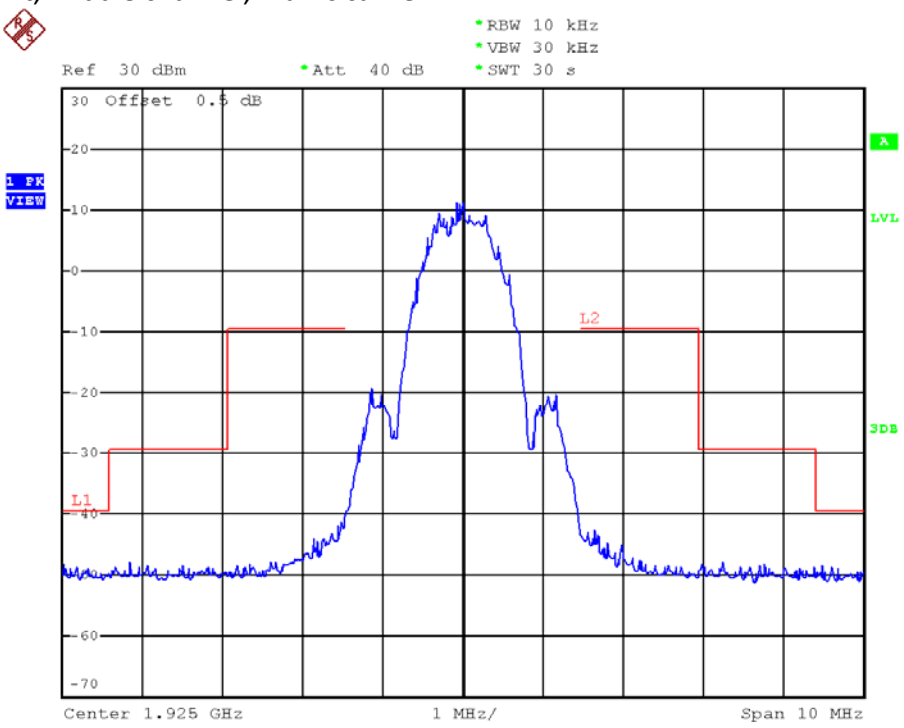

Handset unit, Highest channel, Traffic carrier

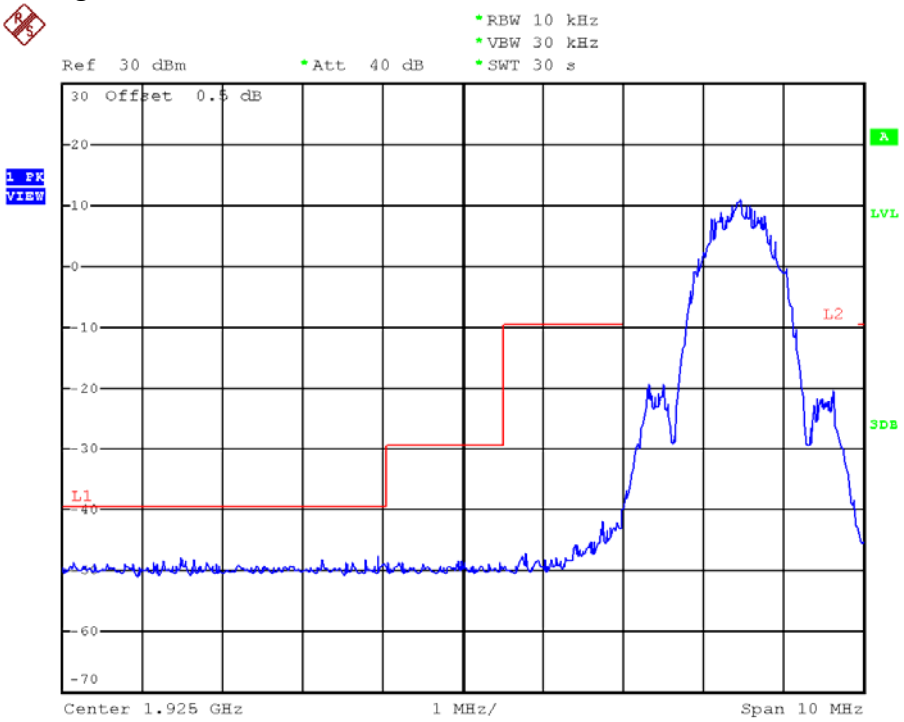

TEST REPORT

4.9 Emissions Outside the Sub-Band, FCC Rule 15.323(d):

Emissions outside the sub-band shall be attenuated below a reference power of 112 mW (20.5 dBm) as follows:

1. 30 dB between the band edge and 1.25 MHz above or below the band;
2. 50 dB between 1.25 and 2.5 MHz above or below the band; and
3. 60 dB at 2.5 MHz or greater above or below the band, or shall meet the requirement of FCC Rule 15.319(g) which shall not exceed the limits of FCC Rule 15.209.

Example: Calculation of Limit for emissions between the band edge and 1.25 MHz (1920.000 – 1918.750 MHz)

The emissions shall not exceed the Limit: 20.5 dBm – 30 dB = -9.5 dBm

Measurements are made in accordance with ANSI C63.17 sub-clause 6.1.6.2. Radiated emissions test method is used. Emissions that are directly caused by digital circuits in the transmit path and transmitter portion are measured.

Test setup is shown in section 3.2 Figure 3.2.1

Test Results:

Channel	Carrier Frequency (MHz)	Measured Band (MHz)	Limit (dBm)	Results
Lowest	1921.536	1920.000 - 1918.750	-9.5	Pass
		1918.750 - 1917.500	-29.5	Pass
		0.009 - 1917.500 & 1932.500 - 19300.000	-39.5 / FCC Rule 15.209	Pass
Highest	1928.448	1930.000 - 1931.250	-9.5	Pass
		1931.250 - 1932.500	-29.5	Pass
		0.009 – 1917.500 & 1932.500 - 19300.000	-39.5 / FCC Rule 15.209	Pass

TEST REPORT

4.9.1 Radiated Emissions Configuration Photographs:

Worst Case Radiated Emission
at

Base Unit: 3843.072 MHz and 1932.706 MHz

Handset: 13450.752 MHz

The worst case radiated emission configuration photographs are saved with filename: config photos.pdf

4.9.2 Radiated Emissions Data:

Data are included of the worst case configuration (the configuration which resulted in the highest emission levels). A sample calculation, configuration photographs and data tables of the emissions are included. All measurements were performed with peak detection unless otherwise specified.

The data in table 1-6 list the significant emission frequencies, the limit and the margin of compliance.

Judgement:

Base Unit - Passed by 11.5 dB margin

Handset - Passed by 13.2 dB margin

TEST REPORT

RADIATED EMISSIONS DATA

Mode: Transmission

Table 1, Base Unit

Pursuant to FCC Part 15 Section 15.323 (d) Emissions Requirements

Lowest Channel

Polarization	Frequency (MHz)	Measured Power (dBm)	Power Limit (dBm)	Margin (dB)
H	1917.408	-54.2	-39.5	-14.7
H	1918.517	-49.1	-29.5	-19.6
H	1919.962	-36.7	-9.5	-27.2
H	3843.072	-51.0	-39.5	-11.5
V	5764.608	-57.4	-39.5	-17.9
H	7686.144	-56.9	-39.5	-17.4
H	9607.680	-56.2	-39.5	-16.7
V	11529.216	-54.0	-39.5	-14.5
V	13450.752	-52.9	-39.5	-13.4

NOTES:

1. Peak detector is used for the emission measurement.

2. All measurements were made at 3 meters.

3. Negative value in the margin column shows emission below limit.

TEST REPORT

Mode: Transmission

Table 2, Base Unit

Pursuant to FCC Part 15 Section 15.323 (d) Emissions Requirements

Highest Channel

Polarization	Frequency (MHz)	Measured Power (dBm)	Power Limit (dBm)	Margin (dB)
H	1930.078	-37.0	-9.5	-27.5
H	1931.372	-47.8	-29.5	-18.3
H	1932.706	-51.0	-39.5	-11.5
H	3856.896	-51.1	-39.5	-11.6
V	5785.344	-57.6	-39.5	-18.1
H	7713.792	-57.0	-39.5	-17.5
H	9642.240	-56.0	-39.5	-16.5
V	11570.688	-54.1	-39.5	-14.6
V	13499.136	-53.1	-39.5	-13.6

NOTES:

1. Peak detector is used for the emission measurement.

2. All measurements were made at 3 meters.

3. Negative value in the margin column shows emission below limit.

TEST REPORT

Mode: Talk mode

Table 3, Base Unit

Pursuant to FCC Part 15 Section 15.323 (d) Emissions Requirements

Polarization	Frequency (MHz)	Measured Power (dBm)	Power Limit (dBm)	Margin (dB)
V	31.283	-72.4	-39.5	-32.9
V	75.266	-75.8	-39.5	-36.3
V	112.750	-71.3	-39.5	-31.8
V	196.600	-70.5	-39.5	-31.0
V	219.566	-72.6	-39.5	-33.1
H	400.916	-64.8	-39.5	-25.3

NOTES:

1. Peak detector is used for the emission measurement.

2. All measurements were made at 3 meters.

3. Negative value in the margin column shows emission below limit.

TEST REPORT

Mode: Transmission

Table 4, Handset

Pursuant to FCC Part 15 Section 15.323 (d) Emissions Requirements

Lowest Channel

Polarization	Frequency (MHz)	Measured Power (dBm)	Power Limit (dBm)	Margin (dB)
V	1917.134	-54.5	-39.5	-15.0
V	1918.464	-50.5	-29.5	-21.0
V	1919.976	-39.8	-9.5	-30.3
H	3843.072	-53.2	-39.5	-13.7
V	5764.608	-56.7	-39.5	-17.2
V	7686.144	-55.1	-39.5	-15.6
H	9607.680	-55.8	-39.5	-16.3
V	11529.216	-53.9	-39.5	-14.4
V	13450.752	-52.7	-39.5	-13.2

NOTES:

1. Peak detector is used for the emission measurement.

2. All measurements were made at 3 meters.

3. Negative value in the margin column shows emission below limit.

TEST REPORT

Mode: Transmission

Table 5, Handset

Pursuant to FCC Part 15 Section 15.323 (d) Emissions Requirements

Highest Channel

Polarization	Frequency (MHz)	Measured Power (dBm)	Power Limit (dBm)	Margin (dB)
V	1930.033	-41.1	-9.5	-31.6
V	1931.411	-50.7	-29.5	-21.2
V	1932.605	-54.8	-39.5	-15.3
H	3856.896	-53.0	-39.5	-13.5
V	5785.344	-56.8	-39.5	-17.3
V	7713.792	-55.5	-39.5	-16.0
H	9642.240	-56.1	-39.5	-16.6
V	11570.688	-54.0	-39.5	-14.5
V	13499.136	-52.9	-39.5	-13.4

NOTES:

1. Peak detector is used for the emission measurement.

2. All measurements were made at 3 meters.

3. Negative value in the margin column shows emission below limit.

TEST REPORT

Mode: Talk mode

Table 6, Handset

Pursuant to FCC Part 15 Section 15.323 (d) Emissions Requirements

Polarization	Frequency (MHz)	Measured Power (dBm)	Power Limit (dBm)	Margin (dB)
V	31.337	-72.1	-39.5	-32.6
V	66.600	-76.3	-39.5	-36.8
V	131.600	-68.2	-39.5	-28.7
V	180.620	-67.3	-39.5	-27.8
V	196.654	-71.6	-39.5	-32.1
V	234.300	-71.9	-39.5	-32.4

NOTES:

1. Peak detector is used for the emission measurement.

2. All measurements were made at 3 meters.

3. Negative value in the margin column shows emission below limit.

TEST REPORT

4.9.3 Field Strength Calculation

The field strength is calculated by adding the reading on the Spectrum Analyzer to the factors associated with preamplifiers (if any), antennas, cables, pulse desensitization and average factors (when specified limit is in average and measurements are made with peak detectors). A sample calculation is included below.

FS = RA + AF + CF - AG + PD + AV

Where FS = Field Strength in dBμV/m
RA = Receiver Amplitude (including preamplifier) in dBμV
CF = Cable Attenuation Factor in dB
AF = Antenna Factor in dB
AG = Amplifier Gain in dB
PD = Pulse Desensitization in dB
AV = Average Factor in -dB

In the radiated emission table which follows, the reading shown on the data table may reflect the preamplifier gain. An example of the calculations, where the reading does not reflect the preamplifier gain, follows:

FS = RA + AF + CF - AG + PD + AV

<u>Example</u>

Assume a receiver reading of 62.0 dBμV is obtained. The antenna factor of 7.4 dB and cable factor of 1.6 dB is added. The amplifier gain of 29.0 dB is subtracted. The pulse desensitization factor of the spectrum analyzer is 0.0 dB, and the resultant average factor is -10.0 dB. The net field strength for comparison to the appropriate emission limit is 32.0 dBμV/m. This value in dBμV/m is converted to its corresponding level in μV/m.

RA = 62.0 dBμV
AF = 7.4 dB
CF = 1.6 dB
AG = 29.0 dB
PD = 0.0 dB
AV = -10 dB

FS = 62.0 + 7.4 + 1.6 – 29.0 + 0.0 + (-10.0) = 32.0 dBμV/m

Level in μV/m = Common Antilogarithm [(32.0 dBμV/m)/20] = 39.8 μV/m

TEST REPORT

4.9.4 Average Factor Calculation and Transmitter ON Time Measurements, FCC Rule 15.35(b, c)

[ ] The EUT antenna output port was connected to the input of the spectrum analyzer. The analyzer center frequency was set to EUT RF channel carrier. The SPAN function on the analyzer was set to ZERO. The transmitter ON time was determined from the resultant time-amplitude display:

Please refer to the attached plots for more details:

The plots of Transmitter ON Time Measurements are as below.

[ ] Please refer to the attached transmitter timing diagram that are provided by manufacturer

[×] Not applicable - No average factor is required.

[ ] Please refer to Technical Description (descri.pdf) for more details

TEST REPORT

4.10 AC Power Line Conducted Emissions, FCC Rule 15.315:

The AC power line conducted emission shall not exceed the limits of FCC Rule 15.207.

Measurements are made in accordance with ANSI C63.4 sub-clause 7. Emissions that are directly caused by digital circuits in the transmit path and transmitter portion are measured.

Test setup is shown in section 3.3 Figure 3.3.1.

[ ] Not applicable – EUT is only powered by battery for operation.

[ ] EUT connects to AC power line. Emission Data is listed in following pages.

[×] Base Unit connects to AC power line and has transmission. Handset connects to AC power line (indirectly) but has no transmission. Emission Data of Base Unit is listed in following pages.

[ ] Handset connects to AC power line (indirectly) only during charging. Emission Data is listed in following pages.

TEST REPORT

4.10.1 AC Power Line Conducted Emissions Configuration Photographs:

Worst Case AC Power Line Conducted Emission
at

307.5 kHz

The worst case AC power Line conducted emission configuration photographs are saved with filename: config photos.pdf

4.10.2 AC Power Line Conducted Emissions Data:

The plot(s) and data in the following pages list the significant emission frequencies, the limit and the worst case margin of compliance.

Judgment:

Passed by 18.94 dB margin compared with CISPR average limit

TEST REPORT

Worst Case: Talk mode

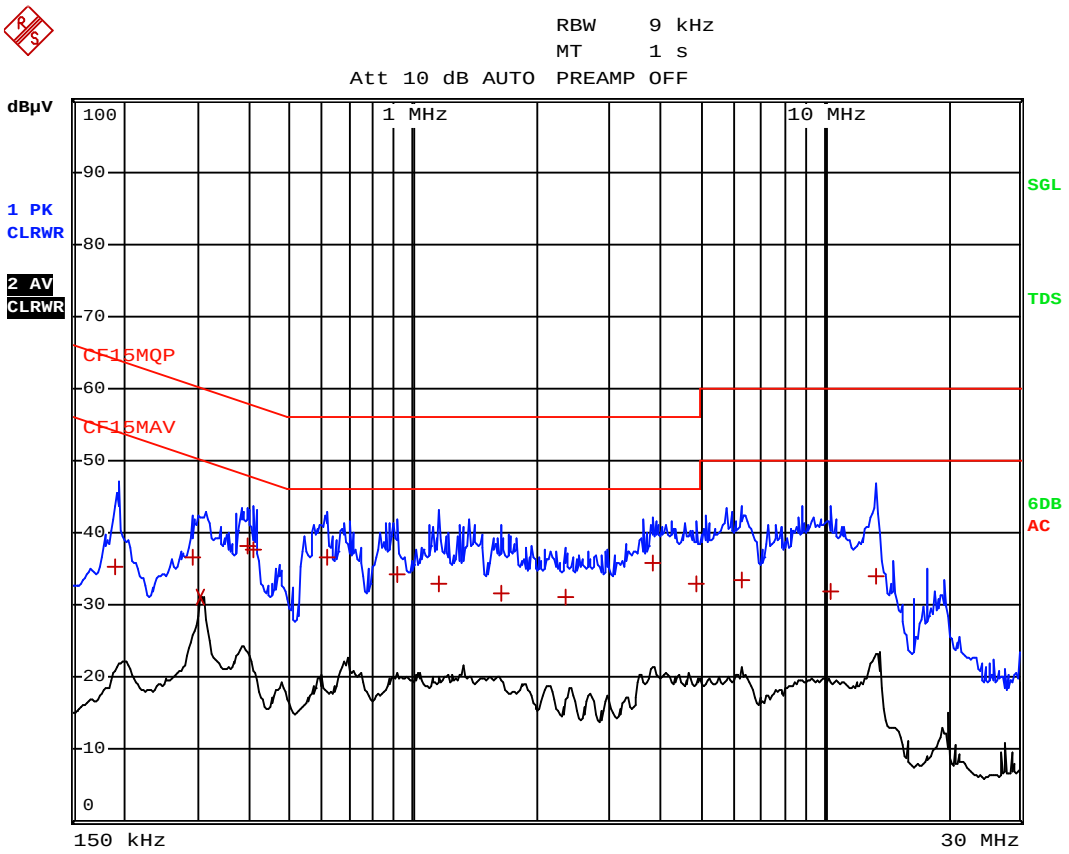

TEST REPORT

Worst Case: Talk mode

EDIT PEAK LIST (Final Measurement Results)

Trace1: CF15MQP
Trace2: CF15MAV
Trace3: ---

	TRACE	FREQUENCY	LEVEL dBµV		DELTA LIMIT dB
1	Quasi Peak	190.5 kHz	35.38	L1	-28.62
1	Quasi Peak	289.5 kHz	36.49	L1	-24.04
2	CISPR Average	307.5 kHz	31.09	L1	-18.94
1	Quasi Peak	393 kHz	38.10	L1	-19.89
1	Quasi Peak	406.5 kHz	37.56	L1	-20.15
1	Quasi Peak	613.5 kHz	36.52	N	-19.47
1	Quasi Peak	910.5 kHz	34.16	N	-21.83
1	Quasi Peak	1.149 MHz	32.94	N	-23.05
1	Quasi Peak	1.6395 MHz	31.68	L1	-24.31
1	Quasi Peak	2.3505 MHz	31.19	N	-24.80
1	Quasi Peak	3.822 MHz	35.83	N	-20.16
1	Quasi Peak	4.911 MHz	32.92	N	-23.07
1	Quasi Peak	6.3375 MHz	33.37	L1	-26.63
1	Quasi Peak	10.3605 MHz	31.85	N	-28.14
1	Quasi Peak	13.3845 MHz	33.95	N	-26.04

TEST REPORT

4.11 Frame Repetition Stability, FCC Rule 15.323(e):

[ ] EUT implements Time Division Duplex (TDD) (not include TDMA) in order to support duplex connection on a given frequency carrier shall maintain a frame repetition rate whereby 3 x standard deviation of the frequency stability shall not exceed 50 ppm, not including a shift of the mean.

[×] EUT uses Time Division Multiple Access (TDMA) in order to support multiple communication links on a given frequency carrier shall maintain a frame repetition rate whereby 3 x standard deviation of the frequency stability shall not exceed 10 ppm, not including a shift of the mean.

Measurements are made in accordance with ANSI C63.17 sub-clause 6.2.2. Test setup is shown in section 3.4 Figure 3.4.1. A spectrum analyzer measures the time duration between rising edges of two consecutive frames over a time period of at least 1000 frame periods. These measurement values are used to compute the 3 x standard deviation of the frequency stability.

Test Results:

I. Base unit

Maximum Frame Repetition Stability (ppm)	Limit (ppm)	Results
>-0.0001 & < 0.0001	±10	Pass

II. Handset

Maximum Frame Repetition Stability (ppm)	Limit (ppm)	Results
>-0.0001 & < 0.0001	±10	Pass

TEST REPORT

4.12 Frame Period and Jitter, FCC Rule 15.323(e):

The frame period (a set of consecutive time slots in which the position of each time slot can be identified by reference to a synchronizing source) of EUT operating in these sub-bands shall be 20 ms or 10 ms/X where X is a positive whole number.

The jitter (time-related, abrupt, spurious variations in the duration of the frame interval) introduced at the two ends of such a communication link shall not exceed 25 μs for any two consecutive transmissions. Transmissions shall be continuous in every time and spectrum window during the frame period defined for EUT.

Measurements are made in accordance with ANSI C63.17 sub-clause 6.2.3. Test setup is shown in section 3.4 Figure 3.4.1. A spectrum analyzer measures the time duration between the rising edges of two consecutive frames. The measurements are taken over 100,000 frames. These measurement values are used to compute mean value and the difference between any two consecutive frame periods. The mean value is the frame period.

Test Results:

I. Base unit

Measured Maximum Jitter (μs)	Limit (μs)	Result
-0.1029	±25	Pass

II. Handset

Measured Maximum Jitter (μs)	Limit (μs)	Result
-0.0405	±25	Pass

TEST REPORT

4.13 Carrier Frequency Stability, FCC Rule 15.323(f):

The carrier frequency stability of EUT shall be maintained within +/-10 ppm at the following conditions:

1. Over 1 hour at nominal supply voltage and a temperature of +20 °C;
2. Over a variation in the primary supply voltage of 85 % to 115 % of nominal supply voltage at a temperature of +20 °C. This test does not apply to an EUT that is only powered by battery for operation;
3. Over a temperature variation of -20 °C to +50 °C or at extreme temperatures as declared by manufacturer, and at nominal supply voltage.

For Base unit:
The nominal supply voltage: 115 VAC and the extreme temperatures of -20°C to +50°C are declared by manufacturer.

For Handset:
The nominal supply voltage: 2.4 VDC and the extreme temperatures of -20°C to +50°C are/is declared by manufacturer.

Measurements are made in accordance with ANSI C63.17 sub-clause 6.2.1 The EUT and CMD60 is connected with shielded coaxial cable. The EUT is controlled by DECT Radio Communication Tester, CMD60, to use a fixed frequency channel during test as well as record the frequency offset. The transmission of EUT is in burst mode with pseudo-random data. Test setup is shown as follows.

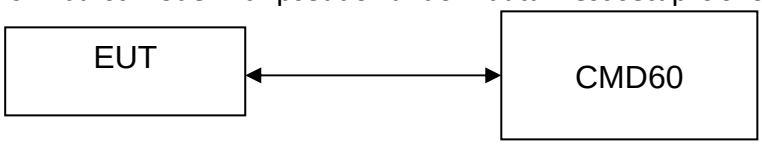

Test Results:

I a. Carrier Frequency Stability over time - base unit

Supply Voltage	Temperature (°C)	Measured Frequency Offset Over an hour (ppm)		Limit (ppm)	Result
		Max.	Min.		
Nominal	+20°C	0.36	1.29	±10	Pass

I b. Carrier Frequency Stability over Power Supply Voltage - base unit

Supply Voltage	Temperature (°C)	Measured Frequency Offset (ppm)	Limit (ppm)	Results
85%	+20°C	0.47	±10	Pass
115%	+20°C	0.47	±10	Pass

I c. Carrier Frequency Stability over Temperature - base unit

Supply Voltage	Temperature (°C)	Measured Frequency Offset (ppm)	Limit (ppm)	Results
Nominal	-20°C	-0.52	±10	Pass
Nominal	+50°C	2.67	±10	Pass

TEST REPORT

4.13 Carrier Frequency Stability, FCC Rule 15.323(f): -Continued

Test Results:

II a. Carrier Frequency Stability over time - handset

Supply Voltage	Temperature (°C)	Measured Frequency Offset Over an hour (ppm)		Limit (ppm)	Result
		Max.	Min.		
Nominal	+20°C	-0.46	1.03	±10	Pass

II b. Carrier Frequency Stability over Power Supply Voltage - handset

Supply Voltage	Temperature (°C)	Measured Frequency Offset (ppm)	Limit (ppm)	Results
85%	+20°C	NA	±10	Pass
115%	+20°C	NA	±10	Pass

II c. Carrier Frequency Stability over Temperature -handset

Supply Voltage	Temperature (°C)	Measured Frequency Offset (ppm)	Limit (ppm)	Result
Nominal	-20°C	-0.69	±10	Pass
Nominal	+50°C	1.54	±10	Pass

TEST REPORT

4.14 Monitoring Threshold:

Monitoring threshold can be relaxed according to FCC Rule 15.323(c)(9). EUT that has a power output lower than the maximum permitted under FCC Rule 15.319(c) may increase their monitoring detection threshold by one decibel for each one decibel that the transmitter power is below the maximum permitted.

Calculation of Monitoring Threshold Limit:

Monitoring Threshold (T) $\leq -174 + 10 \log_{10} B + M_L + P_{max} - P_{EUT}$ dBm
$\leq 15 \log_{10} B - 184 + M_L - P_{EUT}$ dBm

Where B = Measured Emission Bandwidth of base unit – 1.47 x10^6Hz

B = Measured Emission Bandwidth of handset - 1.47 x10^6Hz

M_L = Specified by the manufacturer declared in declaration.pdf for Monitoring Threshold (T_L)

P_{max} = $5 \log_{10} B - 10$ dBm

P_{EUT} = Measured Peak Transmit Power of base unit - 20.45 dBm

P_{EUT} = Measured Peak Transmit Power of handset - 20.29 dBm

Calculated Monitoring Threshold Limits:

I. Base unit

Monitoring Threshold ($T_L + U_M$) in dBm	-75.9

II. Handset

Monitoring Threshold ($T_L + U_M$) in dBm	-75.8

NA - Not applicable

TEST REPORT

4.14.1 Monitoring Threshold Limit, FCC Rule 15.323(c)(2):

[×] Not applicable – EUT supports at least of 20 duplex system access channels and implements Least Interfered Channel (LIC) algorithm. Please refer to the section 4.14.2 for more details.

[ ] The monitoring threshold must not be more than 30 dB above the thermal noise power for a bandwidth equivalent to the emission bandwidth used by EUT.

Measurements are made in accordance with ANSI C63.17 sub-clause 7.3.1. Test setup is shown in section 3.5 Figure 3.5.1. The test is performed on the carrier closest to center of the band. RF signal generators apply uniform CW interference on all EUT carriers each at level $T_L + U_M$ + 10 dB. Then, the interference level is reduced uniformly on all carriers until the EUT can transmit. The interference level shall be lower than or equal to the threshold limit.

Test Results:

I. Base unit

Measured Maximum Interference Level (dBm)	Monitoring Threshold Limit (dBm) ($T_L + U_M$)	Results
NA	-75.9	NA

II. Handset

Measured Maximum Interference Level (dBm)	Monitoring Threshold Limit (dBm) ($T_L + U_M$)	Results
NA	-75.8	NA

NA - Not applicable

TEST REPORT

4.14.2 Least Interfered Channel, LIC, FCC Rule 15.323(c)(5):

[ ] Not implemented – EUT met monitoring threshold requirements. Please refer to the section 4.14.1 for more details

[×] If access to spectrum is not available as determined by section 4.14.1 and a minimum of 20 duplex system access channels are defined for the EUT, the time and spectrum windows with the lowest power level may be accessed

Number of duplex channels per frequency channel	= 12
Number of frequency channel	= 5
Total Duplex Channels	= 60

TEST REPORT

4.14.2.1 Least Interfered Channel (LIC) Selection, FCC Rule 15.323(c)(5):

The criteria are specified in section 4.14.2. In addition, the power measurement resolution for this comparison must be accurate to within 6 dB.

Measurements are made in accordance with ANSI C63.17 sub-clause 7.3.2. Test setup is shown in section 3.5 Figure 3.5.1. RF signal generators apply uniform CW interference on all EUT carriers except two carriers (designated f_1 and f_2), each at level $T_L + U_M + 14$dB (cases 1 and 2) and $T_L + U_M + 8$dB (cases 3 and 4). EUT can only transmit on f2 carrier (cases 1 and 3) and f1 carrier (cases 2 and 4).

Test Descriptions and Results:

I. LIC Procedure - Base unit

	Test Descriptions	EUT Transmits on	Results
1	Apply interference on f_1 at level $T_L + U_M + 7$ dB. Apply interference on f_2 at level $T_L + U_M$. Initiate transmission. Verify transmission on f_2. Terminate transmission. Repeat 5 times.	f_2	Pass
2	Apply interference on f_1 at level $T_L + U_M$. Apply interference on f_2 at level $T_L + U_M + 7$ dB. Initiate transmission. Verify transmission on f_1. Terminate transmission. Repeat 5 times.	f_1	Pass
3	Apply interference on f_1 at level $T_L + U_M + 1$ dB. Apply interference on f_2 at level $T_L + U_M - 6$ dB. Initiate transmission. Verify transmission on f_2. Terminate transmission. Repeat 5 times.	f_2	Pass
4	Apply interference on f_1 at level $T_L + U_M - 6$ dB. Apply interference on f_2 at level $T_L + U_M + 1$ dB. Initiate transmission. Verify transmission on f_1. Terminate transmission. Repeat 5 times.	f_1	Pass

NA - Not applicable

TEST REPORT

4.14.2.1 Least Interfered Channel (LIC) Selection, FCC Rule 15.323(c)(5): - Continued

Test Descriptions and Results:

II. LIC Procedure - Handset

	Test Descriptions	EUT Transmits on	Results
1	Apply interference on f_1 at level $T_L + U_M + 7$ dB. Apply interference on f_2 at level $T_L + U_M$. Initiate transmission. Verify transmission on f_2. Terminate transmission. Repeat 5 times.	f_2	Pass
2	Apply interference on f_1 at level $T_L + U_M$. Apply interference on f_2 at level $T_L + U_M + 7$ dB. Initiate transmission. Verify transmission on f_1. Terminate transmission. Repeat 5 times.	f_1	Pass
3	Apply interference on f_1 at level $T_L + U_M + 1$ dB. Apply interference on f_2 at level $T_L + U_M - 6$ dB. Initiate transmission. Verify transmission on f_2. Terminate transmission. Repeat 5 times.	f_2	Pass
4	Apply interference on f_1 at level $T_L + U_M - 6$ dB. Apply interference on f_2 at level $T_L + U_M + 1$ dB. Initiate transmission. Verify transmission on f_1. Terminate transmission. Repeat 5 times.	f_1	Pass

NA - Not applicable

TEST REPORT

4.14.2.2 Least Interfered Channel (LIC) Confirmation, FCC Rule 15.323(c)(5):

EUT utilizing the provision of FCC Rule 15.323(c)(5) must have monitored all access channels defined for its system within the last 10 s and must verify, within the 20 ms (40 ms for EUT designed to use a 20 ms frame period) immediately preceding actual channel access that the detected power of the selected time and spectrum windows is no higher than the previously detected value.

Measurements are made in accordance with ANSI C63.17 sub-clause 7.3.3. This test is performed in section 4.14.2 and 4.15.

Results:

The tests are reported in section 4.14.2 and 4.15.

4.14.2.3 Maximum Spectrum Occupancy, FCC Rule 15.323(c)(5):

No EUT or group of co-operating EUTs located within 1 meter of each other shall during any frame period occupy more than 6 MHz of aggregate bandwidth, or alternatively, more than one third of the time and spectrum windows defined by the EUT.

Attestation:

According to the technical description provided, the total number of the time and spectrum windows defined by the system is 5*12 = 60.

During any frame period, the maximum number of time and spectrum windows occupied by the system will be 12, which is less than one third of the time and spectrum windows defined by the system.

TEST REPORT

4.15 Monitoring Time, FCC Rule 15.323(c)(1):

Immediately prior to initiating transmission, EUT must monitor the combined time and spectrum windows in which they intend to transmit for a period of at least 10 ms for EUT designed to use a 10 ms or shorter frame period, or at least 20 ms for EUT designed to use a 20 ms frame period.

Measurements are made in accordance with ANSI C63.17 sub-clause 7.3.3. Test setup is shown in section 3.5 Figure 3.5.1. RF signal generators apply uniform CW interference on all system carriers except two carriers (designated f_1 and f_2), each at level $T_L + U_M$ + 20dB. EUT can only transmit on these two carriers.

Test Descriptions and Results:

I. Base unit

	Test Descriptions	EUT Transmits on	Results
1	Apply interference on f_1 at level $T_L + U_M$ + 20dB, and no interference on f_2. Initiate transmission. Verify transmission on f_2. Then, terminate transmission.	f_2	Pass
2	Apply interference on f_2 at level $T_L + U_M$ + 20dB, and remove interference from f_1 immediately. Also immediately initiate transmission but is at least 20 ms after interference on f_2 is applied. Verify transmission on f_1.	f_1	Pass

II. Handset

	Test Descriptions	EUT Transmits on	Results
1	Apply interference on f_1 at level $T_L + U_M$ + 20dB, and no interference on f_2. Initiate transmission. Verify transmission on f_2. Then, terminate transmission.	f_2	Pass
2	Apply interference on f_2 at level $T_L + U_M$ + 20dB, and remove interference from f_1 immediately. Also immediately initiate transmission but is at least 20 ms after interference on f_2 is applied. Verify transmission on f_1.	f_1	Pass

TEST REPORT

4.16 Maximum Transmit Period, FCC Rule 15.323(c)(3):

If no signal above the threshold level is detected, transmission may commence and continue with the same emission bandwidth in the monitored time and spectrum windows without further monitoring. However, occupation of the same combined time and spectrum windows by a EUT or group of co-operating EUTs continuously over a period of time longer than 8 hours is not permitted without repeating the access criteria.

EUT establishes a communication channel with its companion device, which occupies the duplex pair combined time and spectrum windows. Reference RF signal generator synchronized with the sample and then generated a pulse as a time frame reference. The centre frequency of spectrum analyzer was set to the carrier frequency and the SPAN was set to ZERO. The spectrum analyzer was used to monitor the time (reference to the time signal) and spectrum of the communication channel. The occupied time or spectrum of the communication channel shall be changed over a period of time no longer than 8 hours. For a EUT with a frame period of 10/X ms, no more than 2,880,000 X frames should be transmitted without a break.

Test setup is shown as follows:

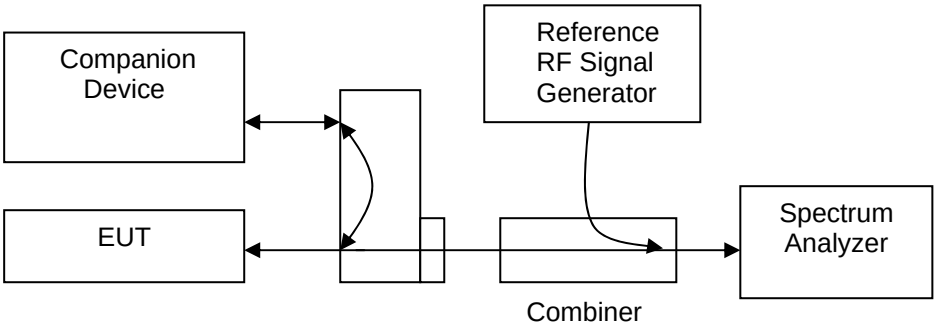

Test Results:

I. Base unit

Measured Maximum Transmission Duration (minutes)	Limit (minutes)	Results
360	480	Pass

II. Handset

Measured Maximum Transmission Duration (minutes)	Limit (minutes)	Results
360	480	Pass

TEST REPORT

4.17 System Acknowledgement, FCC Rule 15.323(c)(4):

Once access to specific combined time and spectrum windows is obtained an acknowledgment from a system participant must be received by the initiating transmitter within one second or transmission must cease. Periodic acknowledgments must be received at least every 30 seconds or transmission must cease. Channels used exclusively for control and signaling information may transmit continuously for 30 seconds without receiving an acknowledgment, at which time the access criteria must be repeated.

Measurements are made in accordance with ANSI C63.17 sub-clause 8.1.1 and 8.2.1. Test setup is shown in section 3.5 Figure 3.5.1.

Test Results:

I. Base Unit

[×] Timing for EUTs using control and signaling channel type transmissions:

Conditions	Transmission Duration (seconds)	Limit (seconds)	Results
Time needed to repeat access criteria	1.28	30	Pass

[×] Timing for EUTs using communications channel type transmissions:

Conditions	Transmission Duration (seconds)	Limit (seconds)	Results
Activate EUT w/ companion device off	NA	1	NA
Time needed to cease Traffic Channel	5.01	30	Pass

NA - Not applicable

TEST REPORT

4.17 System Acknowledgement, FCC Rule 15.323(c)(4): - Continued

II. Handset

[ ] Timing for EUTs using control and signaling channel type transmissions:

Conditions	Transmission Duration (seconds)	Limit (seconds)	Results
Time needed to repeat access criteria	NA	30	NA

[×] Timing for EUTs using communications channel type transmissions:

Conditions	Transmission Duration (seconds)	Limit (seconds)	Results
Activate EUT w/ companion device off	0	1	Pass
Time needed to cease Traffic Channel	5.01	30	Pass

NA - Not applicable

TEST REPORT

4.18 Random Waiting, FCC Rule 15.323(c)(6):

If the selected combined time and spectrum windows are unavailable, the EUT may either monitor and select different windows or seek to use the same windows after waiting an amount of time, randomly chosen from a uniform random distribution between 10 and 150 ms, commencing when the channel becomes available.

Measurements are made in accordance with ANSI C63.17 sub-clause 8.1.2 or 8.1.3. Test setup is shown in section 3.5 Figure 3.5.1.

Test Results:

I. Base unit

[×] Random Waiting is not implemented in the EUT:

Conditions	Transmit Channel	Results
Interference applied at operating Channel, f_1	f_2	Pass

[ ] Random Waiting is implemented in the EUT:

Maximum Time Interval from the End of Interference to the Start of the Control Channel	The Distribution of the Measured Time Intervals	Results
NA	NA	NA

II. Handset

[×] Random Waiting is not implemented in the EUT:

Conditions	Transmit Channel	Results
Interference applied at operating Channel, f_1	NA	NA

[ ] Random Waiting is implemented in the EUT:

Maximum Time Interval from the End of Interference to the Start of the Control Channel	The Distribution of the Measured Time Intervals	Results
NA	NA	NA

NA - Not applicable

TEST REPORT

4.19 Monitoring Bandwidth, FCC Rule 15.323(c)(7).1:

The monitoring bandwidth must be equal to or greater than the emission bandwidth of the intended transmission.

Measurements are made in accordance with ANSI C63.17 sub-clause 7.4. Test setup is shown in section 3.5 Figure 3.5.1.

Attestation:

[×] Monitoring bandwidth of the EUT is equal to the occupied bandwidth of the intended transmission. Monitoring is made through the radio receiver used by the EUT for communication. Please refer to the section 2.2 Technical Description for more details. Designed bandwidth refers to section 4.3 Emission Bandwidth.

[ ] Compliance is demonstrated by Monitoring Bandwidth Tests as shown below.

Test Results:

Ia. Simple Compliance Test Results - Base unit

Interference from Carrier	Reaction of EUT	Results
-30% EBW	NA	NA
+30% EBW	NA	NA

Ib. Detailed Compliance Test Results - Base unit

CW Interference from Carrier	Reaction of EUT	Results
+ 6 dB	NA	NA
+ 12 dB	NA	NA
- 6 dB	NA	NA
- 12 dB	NA	NA

A – Could Transmit
B – Could not Transmit
NA – Not applicable

*Remarks: Detailed Compliance Test was used to show the compliance of the EUT.

TEST REPORT

4.19 Monitoring Bandwidth, FCC Rule 15.323(c)(7).1: - Continued

IIa. Simple Compliance Test Results - Handset

Interference from Carrier	Reaction of EUT	Results
-30% EBW / Occupied Bandwidth	NA	NA
+30% EBW / Occupied Bandwidth	NA	NA

IIb. Detailed Compliance Test Results - Handset

CW Interference from Carrier	Reaction of EUT	Results
+ 6 dB	NA	NA
+ 12 dB	NA	NA
- 6 dB	NA	NA
- 12 dB	NA	NA

A – Could Transmit

B – Could not Transmit

NA – Not applicable

*Remarks: Detailed Compliance Test was used to show the compliance of the EUT.

TEST REPORT

4.20 Maximum Reaction Time, FCC Rule 15.323(c)(7).2:

The monitoring system bandwidth must have a maximum reaction time less than 50 x SQRT (1.25/emission bandwidth *B* in MHz) µs for signals at the applicable threshold level but shall not be required to be less than 50 µs. If a signal is detected that is 6 dB or more above the applicable threshold level, the maximum reaction time shall be 35 x SQRT (1.25/emission bandwidth *B* in MHz) µs but shall not be required to be less than 35 µs.

Measurements are made in accordance with ANSI C63.17 sub-clause 7.5. Test setup is shown in section 3.5 Figure 3.5.1.

Test Results:

	Test	Reaction of EUT	Results
1	Apply Interference Pulse 50µs on f_1 at pulsed level $T_L + U_m$, then apply a CW signal on f_2 at the level T_L	f_2	Pass
2	Change Interference Pulse to 35µs on f_1 at pulsed level $T_L + U_m$ + 6dB,	f_2	Pass

4.21 Monitoring Antenna, FCC Rule 15.323(c)(8):

The monitoring system shall use the same antenna used for transmission, or an antenna that yields equivalent reception at that location.

[×] EUT uses the same antenna used for transmission and monitoring that is in compliance meet above provision.

[ ] EUT uses difference antenna used for transmission and monitoring. It must be verified that the monitoring antenna provides coverage equivalent to that of the transmitting antenna. Measurements are made in accordance with ANSI C63.17 sub-clause 4.

TEST REPORT

4.22 Duplex Connections, FCC 15.323(c)(10):

An initiating device may attempt to establish a duplex connection by monitoring both its intended transmit (Tx) and receive (Rx) time and spectrum windows. If both the intended transmit and receive time and spectrum windows meet the access criteria, then the initiating device can initiate a transmission in the intended transmit time and spectrum window. If the power detected by the responding device can be decoded as a duplex connection signal from the initiating device, then the responding device may immediately begin transmitting on the receive time and spectrum window monitored by the initiating device.

Attestation:

[×] The Handset is the initiating device of the duplex connection

Measurements are made in accordance with ANSI C63.17 sub-clause 8.3. Test setup is shown in section 3.5 Figure 3.5.1.

Test Results:

Ia. Base unit

[ ] Dual Access Criteria Check for EUT not implemented the LIC algorithm and do not offer at least 20 duplex communications channels:

Interference	Reaction of EUT	Results
All Tx and Rx Window, except one for Rx Window	NA	NA
All Tx and Rx Window, except one for Tx Window	NA	NA

Ib. Base unit

[×] Dual Access Criteria Check for EUT implemented the LIC algorithm and offer at least 20 duplex communications channels:

Interference	Reaction of EUT	Results
All Tx windows with level $T_L + U_M$ & Rx windows with level $T_L + U_M$ + 7dB, except one for Tx window & one for Rx window, which are not duplex.	NA	NA
All Tx windows with level $T_L + U_M$ + 7dB & Rx windows with level $T_L + U_M$, except one for Tx window & one for Rx, which are not duplex	NA	NA

TEST REPORT

4.22 Duplex Connections, FCC 15.323(c)(10): - Continued

IIa. Handset

[ ] Dual Access Criteria Check for EUT not implemented the LIC algorithm and do not offer at least 20 duplex communications channels

Interference	Reaction of EUT	Results
All Tx and Rx Window, except one for Rx Window	NA	NA
All Tx and Rx Window, except one for Tx Window	NA	NA

IIb. Handset

[×] Dual Access Criteria Check for EUT implemented the LIC algorithm and offer at least 20 duplex communications channels:

Interference	Reaction of EUT	Results
All Tx windows with level $T_L + U_M$ & Rx windows with level $T_L + U_M$ + 7dB, except one for Tx window & one for Rx window, which are not duplex.	A	Pass
All Tx windows with level $T_L + U_M$ + 7dB & Rx windows with level $T_L + U_M$, except one for Tx window & one for Rx, which are not duplex	B	Pass

A – Could be connected on the target Rx window and its duplex mate

B – Could be connected on the target Tx window and its duplex mate

C – Connected on window which is not the target Tx/Rx window

D – Could not be connected

NA – Not applicable

TEST REPORT

4.23 Alternative Monitoring Interval for Co-located Device, FCC Rule 15.323(c)(11):

An initiating device that is prevented from monitoring during its intended transmit window due to monitoring system blocking from the transmissions of a co-located (within one meter) transmitter of the same system, may monitor the portions of the time and spectrum windows in which they intend to receive over a period of at least 10 ms. The monitored time and spectrum window must total at least 50 % of the 10 ms frame interval and the monitored spectrum must be within the 1.25 MHz frequency channel(s) already occupied by that device or co-located co-operating devices. If the access criteria is met for the intended receive time and spectrum window under the above conditions, then transmission in the intended transmit window by the initiating device may commence.

Measurements are made in accordance with ANSI C63.17 sub-clause 8.4.

Attestation:

[ ] Appropriate as it is co-located device, in which the monitoring system will be blocked from the transmissions of a co-located (Within one meter) transmitter of the same system. Please refer to attachment, 15.323(c)(11).pdf, for details.

[×] Not appropriate, as the system always monitor both the transmit and receive time/spectrum windows, it is not a co-located device.

4.24 Fair Access, FCC Rule 15.323(c)(12):

The provisions of FCC Rule 15.323(c)(10) or (c)(11) shall not be used to extend the range of spectrum occupied over space or time for the purpose of denying fair access to spectrum to other devices.

Attestation:

The manufacturer declares that the device does not use any mechanisms as provided by Part 15.323(c)(10) or (c)(11) to extend the range of spectrum occupied over space or time for the purpose of denying fair access to spectrum to other devices.

Please refer to the declaration letter which is saved with filename: declaration.pdf.

TEST REPORT

5.0 EQUIPMENT LIST

1) Radiated Emissions Test

Equipment	BiConiLog Antenna - 26MHz to 6000MHz	EMI Test Receiver (9kHz to 3GHz)	Double Ridged Guide Antenna
Registration No.	EW-3061	EW-2500	EW-1015
Manufacturer	EMCO	ROHDESCHWARZ	EMCO
Model No.	3142E	ESCI	3115
Calibration Date	Nov. 02, 2017	Oct. 13. 2017	Nov. 17, 2017
Calibration Due Date	Nov. 02, 2018	Oct. 13. 2018	May. 17, 2019

Equipment	Notch Filter (cutoff frequency 1.9GHz to 2.0GHz)	Pyramidal Horn Antenna	Spectrum Analyzer
Registration No.	EW-2360	EW-0905	EW-3110
Manufacturer	MICROWAVE	EMCO	R&S
Model No.	N0319502	3160-09	FSP30
Calibration Date	Jan. 17, 2018	Aug. 12, 2017	Mar. 05, 2018
Calibration Due Date	Jan. 17, 2019	Feb. 18, 2019	Mar. 05, 2018

Equipment	RF Pre-amplifier 3 pcs (9kHz to 40GHz)
Registration No.	EW-3006
Manufacturer	SCHWARZBECK
Model No.	BBV 9744
Calibration Date	Mar. 23, 2017
Calibration Due Date	Mar. 23, 2018

2) Conducted Emissions Test

Equipment	EMI Test Receiver (9kHz to 3GHz)	Pulse Limiter	Artificial Mains
Registration No.	EW-2500	EW-0700	EW-0192
Manufacturer	ROHDESCHWARZ	R&S	R&S
Model No.	ECSI	ESH3-Z2	ESH3-Z5
Calibration Date	Oct. 13. 2017	Sep. 07, 2017	Oct. 27, 2017
Calibration Due Date	Oct. 13. 2018	Mar. 07, 2019	Aug. 25, 2018

TEST REPORT

3) Conductive Measurement Test

Equipment	Coaxial directional coupler	Spectrum Analyzer	Digital Radiocommunication Tester for DECT
Registration No.	EW-2337	EW-2253	EW-2460
Manufacturer	MAGNA	R&S	ROHDESCHWARZ
Model No.	4222-16	FSP40	CMD60
Calibration Date	Nil*	Jul. 24, 2017	Apr. 17, 2017
Calibration Due Date	Nil*	Jul. 24, 2018	Apr. 17, 2018

Equipment	Vector Signal Generator	Temperature & Humidity Chamber	Digital Multimeter
Registration No.	EW-3063	EW-2134	EW-0520
Manufacturer	R&S	GIANT FORCE	FLUKE
Model No.	SMBV100A	GTH-750-40-CP-SD	77-3
Calibration Date	Jul. 27, 2017	Aug. 29, 2017	Feb 03, 2017
Calibration Due Date	Jul. 27, 2018	Sep. 4, 2018	Aug. 22, 2018

END OF TEST REPORT