THANK YOU!

Thanks for your favor in our products, this manual is helpful for you to quickly know how to use, we believe this easy-to-use network Digital trunking radio will provide dependable and reliable communication to your operating at peak efficiency.

Please refer to the corresponding feature book for detailed features and operations.

CONTENT

UNPACKING AND CHECKING EQUIPMENT 01
Packing List 01
PREPARATION 02
Charging the Battery Pack 02
Assembling the Battery Pack 04
Assembling the Belt Clip 05
Assembling the Accessories 05
Installing Hand Strap 05
GETTING ACQUAINTED 06
Orientation 06
MENU 07

UNPACKING AND CHECKING EQUIPMENT

Please unpack the radio and check the items listed below are received. If any item is missing or damaged, please contact your dealer at once.

Packing List

DESCRIPTION	QUANTITY
Network Trunking Radio	1
Li-ion Battery Pack	1
Adapter	1
USB Cable	1
Belt Clip	1
User Manual	1
Hand Strap	1

PREPARATION

Charging the Battery Pack

1. Using the Battery Pack

The battery pack is not charged at the factory, please charge it before use. To extend the battery pack lifetime, please power off the transceiver and remove the battery pack when not in use and do not leave the battery in hot or cold place.

2. Battery Pack Characteristics

The battery will slowly wear out even not in use. After charging and recharging, it's normal that the talk and standby times are noticeably shorter than normal times. If leaving the battery in very hot place or conditions, it will reduce the capacity and lifetime of the battery. Overcharging may also shorten its lifetime.

3. Charging the Battery Pack

Please charge your battery only with our approved charger. Initially charging the battery pack after purchase or extended storage (greater than 2 months) will not bring the battery pack to its normal operating capacity. After repeating the charge/discharge cycle two or three times, the operating capacity will increase to normal level.

Please charge the battery pack as follows:

1. Insert the adapter and make sure the contacts are in contact with the socket.
2. Insert the Type-C plug into the Type-C charging jack on radio battery.
3. The charging LED lights red and charging begins.
4. After charging when the light turns to green, it means the battery pack is fully charged. Then you can take off the battery pack or radio with the battery pack and use it.

Caution:

- Make sure the radio is powered off before charging and do not use the radio during charging.
- Read the safety Information booklet in advance to get necessary safety information.

Assembling the Battery Pack

To install the battery pack, fit the extensions on both the sides of the battery into the slots on the both sides of the transceiver's aluminum. Slide the battery towards the transceiver's top until a "click" sound is heard.

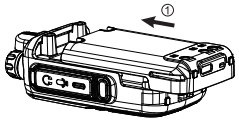

To remove the battery pack, pull downward the battery latch in the middle of the transceiver, then slide downward the battery away from the transceiver's body, and lift the battery from the transceiver's body.

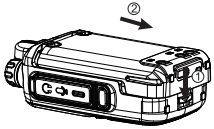

Assembling the Belt Clip

1. Screw the belt clip at the back of radio to assemble.
2. Screw counter clockwise the screws to remove.

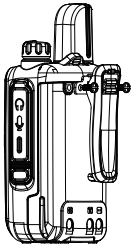

Assembling the Accessories

1. Open the cap of accessory jack.
2. Insert the accessories (such as: earphone/programming cable) plug into the jacks.

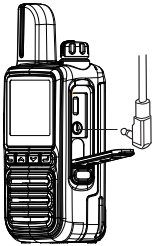

Installing Hand Strap

If necessary, you can install the hand strap in the back of radio in order to easy carry.

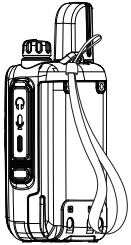

GETTING ACQUAINTED

Orientation

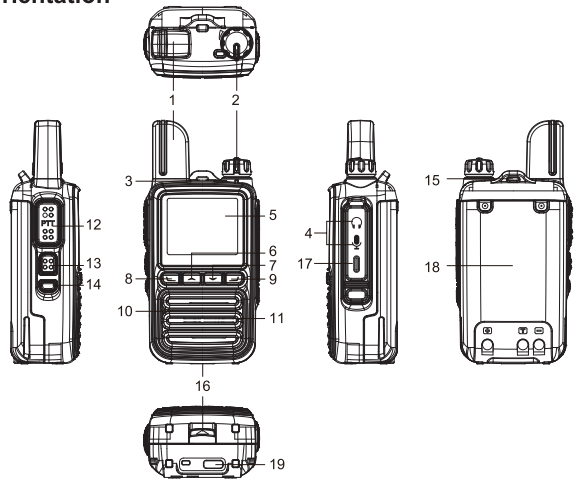

1	Antenna	12	PTT Switch (PTT)
2	Power On-Off/Volume Control Knob	13	Lamp Key/Press Long Key For Group Emergency Alert
3	LED Indicator (TX:red, RX:green)		
4	Accessory Jack		
5	LCD Display	14	Friend Select/Press Long Key To Talk With Friend Privately
6	UP Key (UP)		
7	Down Key (DN)		
8	Menu Key	15	Hand Strap Hook
9	Back Key/Press Long Key For Lock and Unlock Keypad	16	Battery Latch
		17	SIM Card Slot
10	Microphone	18	Battery Pack
11	Speaker	19	Type-C Charging

MENU

No.	Main Menu	Function	Description
1	Group Sel.	POC TEST	Can Select Enter Group, Monitor, Quick Call
2	Member Sel.	Group MBB, Friend MBB	Select Group MBB or Friend MBB to Mark Selcall or Quick Call
3	Dispatcher	SMS List	Use With Software PC
		Delete All	
4	Settings	Backlight	
		Backlight	Can Select Continue,5,10, 15,20,25,30 Second
		Call Backlight	Can Select ON/OFF
		Wallpaper	Can Select Item 1,2,3,4,5 Wallpaper
		Beep Volume	Can Select ON/OFF
		Profiles	Outdoor
			Standard
			Indoor
			Earphone
		Mic Mode	Low
			Middle
			High
		Time Zone	Can Select World Time Zone (Factory Default is UTC+07)
		Power Saving Conf.	
		Power Saving Level	Can Select Level 1,2,3, Automatic
		Sleep Switch	Can Select ON/OFF

No.	Main Menu	Function	Description
4	Settings	SIM Card	SIM Card 1
			SIM Card 2
		SIM Switch Automatically	Can Select ON/OFF
		PTT Tone	Can Select ON/OFF
		Sound Quality	Standard
			High Definition
		Headphone Recognition	Automatic
			Manual
5	GPS Setting	GNSS Switch	Can Select ON/OFF
		GNSS Info	Can Check Latitude and Longitude Information
6	Device Info.	Account Info.	Check Current Account
		App Ver	Check Current Platform Version
		Module Ver	Check Current Device Module Model Number
		IMEI	Check Current IMEI Number
		ICCID	Check Current ICCID Number
		POC Ver	Check the POC Version
		Upgrade	Check the Lastest Device Version

FCC Statement:

Any Changes or modifications not expressly approved by the party responsible for compliance could void the user's authority to operate the equipment. This device complies with part 15 of the FCC Rules. Operation is subject to the following two conditions.

(1) This device may not cause harmful interference, and

(2) This device must accept any interference received, including interference that may cause undesired operation.

SAR tests are conducted using standard operating positions accepted by FCC with the device transmitting at its highest certified power level in all tested frequency bands, although the SAR is determined at the highest certified power level, the actual SAR level of the device while operating can be well below the maximum value. Before a new model is a available for sale to the public, it must be tested and certified to the FCC that is does not exceed the exposure limit established by the FCC. Tests for each product are performed in positions and locations as required by the FCC.

For body worn operation, this device has been tested and meets the FCC RF exposure guidelines when used with and accessory designated for this product or when used with and accessory that contains no metall. To maintain compliance with FCC RF exposure guidelines hold the transmitter and antenna at least 1 inch (2.5 centimeters) from your face and speak in a normal voice, with the antenna pointed up and away from the face.

Note: This equipment has been tested and found to comply with the limits for a Class B digital device, pursuant to part 15 of the FCC Rules. These limits are designed to provide reasonable protection against harmful interference in a residential installation. This equipment generates, uses and can radiate radio frequency energy and, if not installed and used in accordance with the instructions, may cause harmful interference to radio communications. However, there is no guarantee that interference will not occur in a particular installation. If this equipment does cause harmful interference to radio or television reception, which can be determined by turning the equipment off and on, the user is encouraged to try to correct the interference by one or more of the following measures:

-Reorient or relocate the receiving antenna.

-Increase the separation between the equipment and receiver.

-Connect the equipment into an outlet on a circuit different from that to which the receiver is connected.

-Consult the dealer or an experienced radio/TV technician for help.