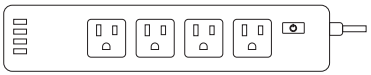

Smart Power Strip

Model No.: ZLD-44USA-W

Thank you.

Thank you for purchasing ZLD-44USA-W smart power strip. We are dedicated to providing our customers with quality products for building a better living. We hope you enjoy your new product!

Package Content

1xSmart Power Strip
1xUser Manual

Safety Information

IMPORTANT: Please read and comply with all of the instructions and warnings provided in this manual before using the product. Failure to comply with the instructions and warning provided herein may result in inaccurate results and/or damage to the product itself.

WARNING:

DO NOT connect a device that exceeds the rated power for this smart power strip. Doing so may overheat or cause possible damage to the smart power strip or other equipments.

DO NOT use the smart power strip if it is damaged in any way, shape, or form.

DO NOT attempt to repair, disassemble or modify this device under any circumstances. Doing so may damage the device or cause electric shock and possible injury.

DO NOT place the smart power strip near any heat source or in direct sunlight.

DO NOT place or operate the smart power strip in high-humidity environment.

DO NOT operate the smart power strip if there is a strange odor or heat emitting from the smart power strip or a connected device, contact customer support immediately.

DO NOT touch any electrical appliances with wet hands or handle appliances near liquids.
Avoid using excessive force when handling the smart power strip. Keep the smart power strip dry and clean at all times.

DO NOT use any solvents or cleaning solutions on the smart power strip. Clean only with a soft, dry cloth.
Never overload electrical circuits as it may cause an electrical shock or fire.

Function Diagram

1. Smart Power Strip
2. Electrical Outlet
3. Power Button
4. Plug
5. USB Ports

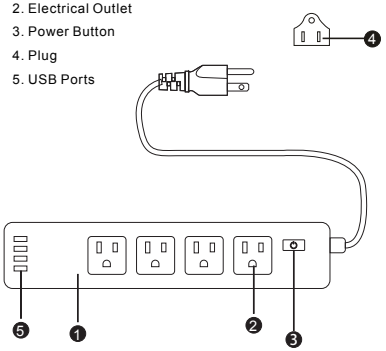

Set-up

WARNING: DO NOT connect a device that exceeds the rated power for this smart power strip. Doing so may overheat or cause possible damage to the smart power strip or other equipment.

Plug this smart device into a powered wall socket and press the power button to turn on the smart power strip. Connect your desired electrical devices to the smart power strip, making sure to not overload the input current(10A).

Note: Each USB port provides a maximum output current of 2.4A. The power strip, with all ports combined, provides a maximum output current of 6A.

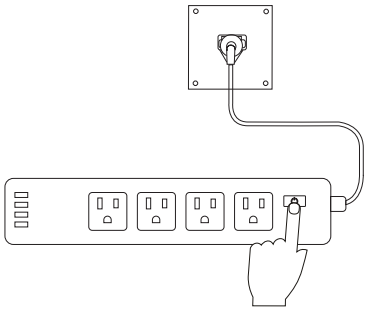

Troubleshooting

Problem	Cause	Solution
My device(s) will not charge or turn on.	Smart power strip is off	Check to make sure the power button on the smart power strip illuminated.
Strange odor or heat emitting from the smart power strip.	Product may be broken or defective.	Immediately unplug the power smart strip and discontinue use. Contact customer service.

Specifications

Power Supply	AC 90V-125V (50/ 60 Hz)
Max Power	2000W (125V / 16A)
Single Outlet Current	10A max
USB Output	4A max totally
Single USB Output	2.4A max
Ports	4 AC Outlets / 4 USB
Operation Temperature	-22°F~129°F (-30℃~65℃)
Storage Temperature	-22°F~140°F (-30℃~60℃)

Warranty

TERMS & POLICY

We warrants all products to be of the highest quality in material, craftsmanship and service for a minimum of 1 year. This warranty is start from the date of purchase.
We will replace any product found to be defective due to manufacturer flaws based on eligibility; refunds are available within the first 30 days after purchase. This warranty extends only to personal use and does not extend to any product that has been used for commercial, rental, or any other use in which the product is not intended for. There are no warranties other than the warranties expressly set forth with each product. This warranty is non-transferable. We are not responsible in any way for any damages, losses or inconveniences caused by equipment failure or by user negligence, abuse, or use non-compliant with the user manual or any additional safety, use, or warnings included in the product packing and manual.

This warranty does not apply to the following.
Damage due to abuse, accident, alteration, misuse,tampering or vandalism.
Improper or inadequate maintenance.
Damage in return transit.
Unsupervised use by children under 18 years of age.

ALL EXPRESSED AND IMPLIED WARRANTIES, INCLUDING THE WARRANTY OF MERCHANTABILITY, ARE LIMITED TO THE PERIOD OF THE LIMITED WARRANTY.

WiFi Smart Devices Manual

Works with Alexa
Simplified steps to install App on your smart device and pair with Amazon Alexa and Google Assistant using Smart Life App on Apple Store/Google Play Store

Adding a New Device in Quick Connection

Download or scan the QR Code and install the Smart Life App for either IOS or Android.

Step 1:

Step 2

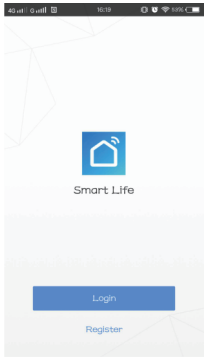

Open the Smart Life APP and register your phone number or email

Step 3

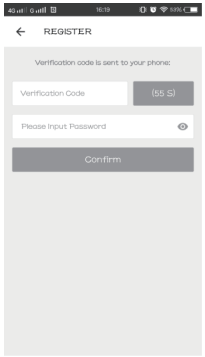

Fill in the verification code that you have received and fill in the password. Sign in the APP

Step 4

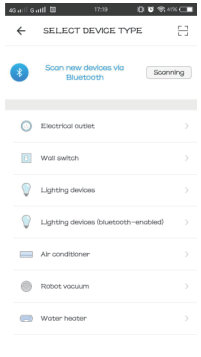

Select the device type and click the "Electrical Outlet"

Step 5

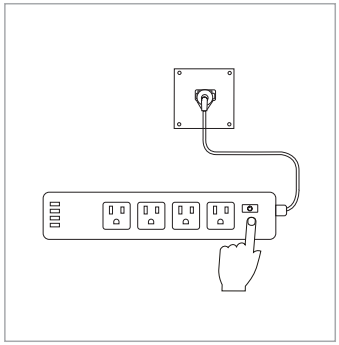

Long press the power button for more than 5 seconds until the indicator light begin to flash quickly(2 times per seconds). This means the device is already for configuration.

Step 6

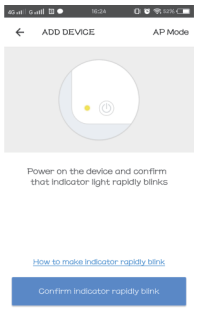

Open your APP and click the "Confirm indicator rapidly link"

Step 7

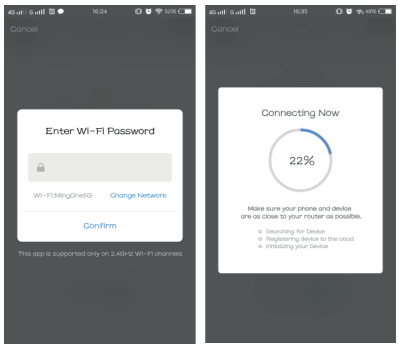

Make sure that your device is close enough to your WiFi router(The smart WiFi devices only support 2.4GHz), enter your WiFi password, click "Confirm"and it shows "Connecting Now".

Step 8

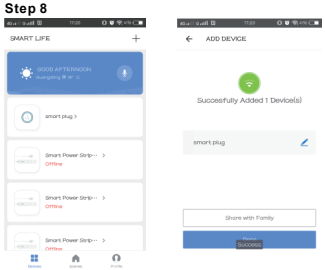

If the device is connected successfully then the indicator light will no longer flash. Then you can control the smart plug to turn ON/OFF.

Adding a New Device in AP Mode

*Make sure the WiFi device is standby(the green light of WiFi device flashes 1 time in 2 seconds) after plug in the socket.
*Press "+" in the main menu of app
*Click "AP Mode" and press "Next Step" in Add Device
*Select WiFi and input WiFi password, press "Next" in Set up WiFi for device
*Press Connect now
*Go to WLAN setting in your smart phone and select the "Smart Life" for your WiFi, no need to input password once you select the "Smart Life" (you can directly to connect it if your OS is Android)
*Go back to app and press "Connect" Device name is "Smart Life"
*Confirm Device

Once App is installed on your device and you have added your smart device to your app you will be able to control it.

FCC Statement

This equipment has been tested and found to comply with the limits for a Class B digital device, pursuant to part 15 of the FCC rules. These limits are designed to provide reasonable protection against harmful interference in a residential installation. This equipment generates, uses and can radiate radio frequency energy and, if not installed and used in accordance with the instructions, may cause harmful interference to radio communications. However, there is no guarantee that interference will not occur in a particular installation. If this equipment does cause harmful interference to radio or television reception, which can be determined by turning the equipment off and on, the user is encouraged to try to correct the interference by one or more of the following measures:

-Reorient or relocate the receiving antenna.

-Increase the separation between the equipment and receiver.

-Connect the equipment into an outlet on a circuit different from that to which the receiver is connected.

-Consult the dealer or an experienced radio/TV technician for help.

Responsible for compliance could void the user’s authority to operate this equipment. (Example- use only shielded interface cables when connecting to computer or peripheral devices).

Any Changes or modifications not expressly approved by the party responsible for compliance could void the user's authority to operate the equipment.

This equipment complies with Part 15 of the FCC Rules. Operation is subject to the following two conditions:

(1) This device may not cause harmful interference, and

(2) This device must accept any interference received, including interference that may cause undesired operation.

FCC Radiation Exposure Statement:

The equipment complies with FCC Radiation exposure limits set forth for uncontrolled enviroment. This equipment should be installed and operated with minimum distance 20cm between the radiator and your body.