Appearance

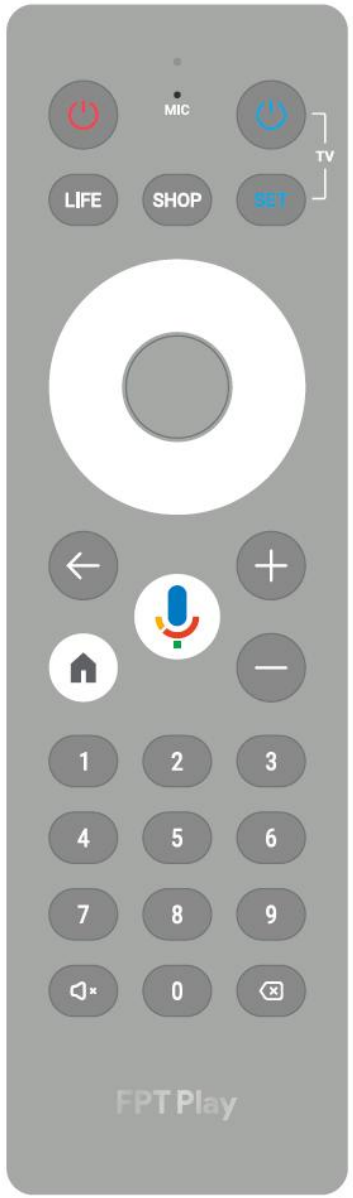

Bluetooth voice remote control AN2704-1IP-003

■ Appearance 2402MHz-2480MHz BLE:2MHz Transmit Power: 2.03dbm

● Size : L140×W40×D20.5(mm)

FCC

This equipment has been tested and found to comply with the limits for a Class B digital device, pursuant to Part 15 of the FCC Rules. These limits are designed to provide reasonable protection against harmful interference in a residential installation. This equipment generates uses and can radiate radio frequency energy and, if not installed and used in accordance with the instructions, may cause harmful interference to radio communications. However, there is no guarantee that interference will not occur in a particular installation. If this equipment does cause harmful interference to radio or television reception, which can be determined by turning the equipment off and on, the user is encouraged to try to correct the interference by one or more of the following measures:

-- Reorient or relocate the receiving antenna.

-- Increase the separation between the equipment and receiver.

-- Connect the equipment into an outlet on a circuit different from that to which the receiver is connected.

-- Consult the dealer or an experienced radio/TV technician for help.

This device complies with part 15 of the FCC Rules. Operation is subject to the following two conditions:

(1) This device may not cause harmful interference, and (2) this device must accept any interference received, including interference that may cause undesired operation.

Changes or modifications not expressly approved by the party responsible for compliance could void the user's authority to operate the equipment

* RF warning for Portable device:

The device has been evaluated to meet general RF exposure requirement. The device can be used in portable exposure condition without restriction.

RCU Specification

- RF Specification
  - Wireless technique : Bluetooth Energy
  - Working range : >8 meters (line of sight)

Electrical Specification

- Rating
  - Operating voltage range : DC 2.2V to 3.6V
  - Operating temperature/humidity range
    : -10℃ to +40℃, 20% to 80% RH
    *Without dew condensation
  - Storage temperature/humidity range
    : -20℃ to +60℃, 20% to 95% RH *except Batteries
  - Power Source Used (3.0V DC) : IR Remote with BT-Voice → LR03 battery x 2p
  - Mass : about 64g (excluding the battery × 2)

- Electrical Performance
  - IR-LED Operation range
    - On shaft : Higher than 7m
    - Specified angle : Higher than 7m

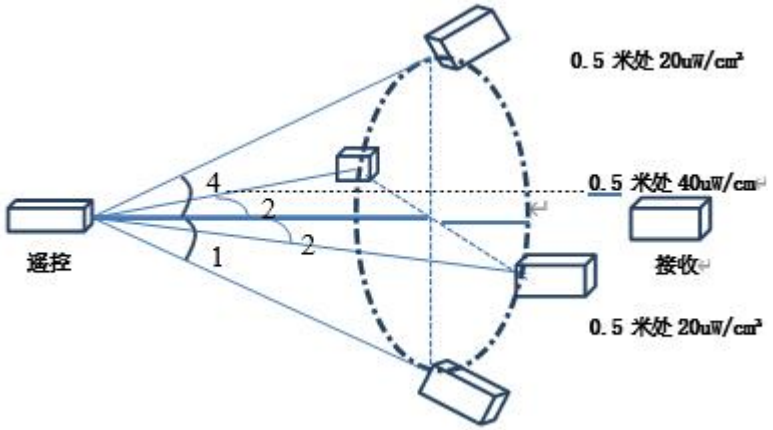

EU DECLARATION OF CONFORMITY

in accordance with
Annex VI of Directive 2014/53/EU of the European Parliament and of the Council

1. For the following Radio equipment:
Product name / Number (s): Bluetooth voice remote control/AN2704-1IP-003
Tradename or Brand: N/A
Software / Hardware number: N/A/N/A

2. Name and address of the manufacturer:
Manufacturer:Dongguan Anycon Intelligent Technology Co.,Ltd.
Address: No12, LiminRoad, jinxiaotangIndustrialPark, Fenggang, Dongguan, Guangdong, Chian

3. This declaration of conformity is issued under the sole responsibility of the Manufacturer.

4. Object of the declaration (identification of the radio equipment allowing traceability; it may include a colour image of sufficient clarity where necessary for the identification of the radio equipment):

5. The object of the declaration described above is in conformity with the relevant Union harmonization legislation: Directive 2014/53/EU (RED)

6. References to the relevant harmonized standards used or references to the other technical specifications in relation to which conformity is declared:
Article 3.2: ETSI EN 300328 V2.2.2 (2019-07)
Article 3.1b: ETSI EN 301 489-1 V2.2.3 (2019-11) ETSI EN 301 489-17 V3.2.4 (2020-09)
Article 3.1a Health: EN 62479:2010
Article 3.1a Electrical Safety: EN IEC 62368-1:2020+A11:2020
7. Notified Body Name: MET Laboratories, Inc.

Notified Body Number: 0980
Notified Body Assessment Performed: Module B/C on Article 3.1a, 3.1b, 3.2 and 3.3
Technical File Identification Number: N/A

8. Where applicable, description of accessories and components, including software, which allow the radio equipment to operate as intended and covered by the EU declaration of conformity: User instructions are provided in the User Manual. The Software and Hardware versions are specified above.

9. Additional information:
Referring to Article 10.2 of the Directive, this equipment is so constructed that it can be operated in all Member States, without infringing applicable requirements on the use of radio spectrum.
Referring to Article 10.10 of the Directive, there are no restrictions on putting this equipment intoservice or of requirements for authorisation of use. Please refer to the User Manual for details.

On behalf of:
Manufacturer:Dongguan Anycon Intelligent Technology Co.,Ltd.
Add: No12, LiminRoad, jinxiaotangIndustrialPark, Fenggang, Dongguan, Guangdong, Chian

(place and date of issue): 2023.3.23

(name, function):AN2704-1IP-003

(signature): Junming Fang