TEST REPORT

Product Name	:	**MINI PC**
Model Number	:	**S15 Ultra, S15, F650, S**, S********, F***, F*****, S15*********, C**********, F********** (“*” may be alphanumeric characters, blank or other characters, which represent operating system or user serial number. But such changes do not concern those factors (such as hardware and the external structure) which might impact the security or electromagnetic compatibility of the device.)**
FCC ID	:	**2AN9R-S15ULTRA**

Prepared for	:	Fujian Centerm Information Co .,Ltd.
Address	:	#21 - #22 Buildings,No.618,Jinshan Road,Jinshan Industrial Park,Cangshan District,Fuzhou City,Fujian Province,China
Prepared by	:	EMTEK (SHENZHEN) CO., LTD.
Address	:	Bldg 69, Majialong Industry Zone, Nanshan District, Shenzhen, Guangdong, China Tel: (0755) 26954280 Fax: (0755) 26954282

Report Number	:	ENS2407150008W00101R
Date(s) of Tests	:	July 23, 2024 to August 19, 2024
Date of Issue	:	August 23, 2024

TABLE OF CONTENTS

1 TEST RESULT CERTIFICATION..... 4
2 EUT TECHNICAL DESCRIPTION..... 5
3 SUMMARY OF TEST RESULT..... 6
4 TEST METHODOLOGY..... 7
4.1 GENERAL DESCRIPTION OF APPLIED STANDARDS..... 7
4.2 MEASUREMENT EQUIPMENT USED..... 7
4.3 DESCRIPTION OF TEST MODES..... 8
5 FACILITIES AND ACCREDITATIONS..... 9
5.1 FACILITIES..... 9
5.2 LABORATORY ACCREDITATIONS AND LISTINGS..... 9
6 TEST SYSTEM UNCERTAINTY..... 10
7 SETUP OF EQUIPMENT UNDER TEST..... 11
7.1 RADIO FREQUENCY TEST SETUP 1..... 11
7.2 RADIO FREQUENCY TEST SETUP 2..... 11
7.3 CONDUCTED EMISSION TEST SETUP..... 13
7.4 BLOCK DIAGRAM CONFIGURATION OF TEST SYSTEM..... 14
7.5 SUPPORT EQUIPMENT..... 14
8 TEST REQUIREMENTS..... 15
8.1 RADIATED SPURIOUS EMISSION..... 15

Modified Information

Version	Report No.	Revision Date	Summary
Ver.1.0	ENS2407150008W00101R	/	Original Report

1 TEST RESULT CERTIFICATION

Applicant	:	Fujian Centerm Information Co .,Ltd.
Address	:	#21 - #22 Buildings,No.618,Jinshan Road,Jinshan Industrial Park,Cangshan District,Fuzhou City,Fujian Province,China
Manufacturer	:	Fujian Centerm Information Co .,Ltd.
Address	:	#21 - #22 Buildings,No.618,Jinshan Road,Jinshan Industrial Park,Cangshan District,Fuzhou City,Fujian Province,China
EUT	:	MINI PC
Model No.	:	S15 Ultra, S15, F650, S**, S********, F***, F*****, S15**********, C**********, F********** (“*” may be alphanumeric characters, blank or other characters, which represent operating system or user serial number. But such changes do not concern those factors (such as hardware and the external structure) which might impact the security or electromagnetic compatibility of the device.) (Note: Pre testing all models, and find the S15 Ultra is the worst, so only the worst data of S15 Ultra is shown in the report.)
Trade Mark	:	YXK

Measurement Procedure Used:

APPLICABLE STANDARDS	
STANDARD	**TEST RESULT**
FCC 47 CFR Part 2, Subpart J FCC 47 CFR Part 15, Subpart C	PASS

The above equipment was tested by EMTEK (SHENZHEN) CO., LTD. The test data, data evaluation, test procedures, and equipment configurations shown in this report were made in accordance with the procedures given in ANSI C63.10 (2013) and the energy emitted by the sample EUT tested as described in this report is in compliance with the above table standards requirement.
The test results of this report relate only to the tested sample identified in this report.

Date of Test	:	July 23, 2024 to August 19, 2024
Prepared by	:	Una Yu/Editor
Reviewer	:	Joe Xia/Supervisor
Approved & Authorized Signer	:	Lisa Wang/Manager

EMTEK (SHENZHEN) CO., LTD. TESTING

2 EUT TECHNICAL DESCRIPTION

Product Name:	MINI PC
Model Number:	S15 Ultra, S15, F650, S**, S********, F***, F*****, S15**********, C**********, F********** (“*” may be alphanumeric characters, blank or other characters, which represent operating system or user serial number. But such changes do not concern those factors (such as hardware and the external structure) which might impact the security or electromagnetic compatibility of the device.) (Note: Pre testing all models, and find the S15 Ultra is the worst, so only the worst data of S15 Ultra is shown in the report.)
Device Type:	Bluetooth V5.2
Data Rate:	1Mbps for GFSK modulation 2Mbps for π/4-DQPSK modulation 3Mbps for 8DPSK modulation
Modulation:	GFSK, π/4-DQPSK, 8DPSK
Operating Frequency Range(s):	2402-2480MHz
Number of Channels:	79 channels
Antenna Type:	Integrated Antenna
Antenna Gain:	3.89dBi (Note: The antenna information is provided by the customers, which will have a certain impact on the test results.)
Power Supply:	AC 120V/60Hz by Adapter Adapter 1: Model: GM39-120300-1A Input: 100-240V~50/60Hz, 1.2A Output: 12V, 3A Adapter 2: Model: GQ36-120300-BU Input: 100-240V~50/60Hz, 1.5A Output: 12V, 3A (Note: The EUT has two adapters, all the adapters are tested, and find the adapter 2 is worst, so only the worst data is shown in the report.)
Temperature Range:	0°C ~ 40°C
Max Output Power:	12.50dBm (Note:The Max Output Power refer to the original module report: RFBBUI-WTW-P21040655-2)

Note: for more details, please refer to the user’s manual of the EUT.

3 SUMMARY OF TEST RESULT

FCC Part Clause	Test Parameter	Verdict	Remark
15.247(a)(1)	20dB Bandwidth	PASS	*
15.247(a)(1)	Carrier Frequency Separation	PASS	*
15.247(a)(1)	Number of Hopping Frequencies	PASS	*
15.247(a)(1)	Average Time of Occupancy (Dwell Time)	PASS	*
15.247(b)(1)	Maximum Peak Conducted Output Power	PASS	*
15.247(c)	Conducted Spurious Emissions	PASS	*
15.247(d) 15.209	Radiated Spurious Emissions	PASS	
15.207	Conducted Emission	PASS	*
15.203	Antenna Application	PASS	*
15.247 (a) (1)/g/h	Frequency Hopping System	PASS	*
NOTE 1: N/A (Not Applicable). NOTE 2:* means that these modules have been tested and comply with FCC requirements, according to technical characteristic and TR 102 070-2 guide, only spurious emissions need to be retested for this report, for all other items' test results please refer to original module's test report No.: RFBBUI-WTW-P21040655-2.			

RELATED SUBMITTAL(S) / GRANT(S):

This submittal(s) (test report) is intended for **FCC ID: 2AN9R-S15ULTRA** filing to comply with Section 15.247 of the FCC Part 15, Subpart C Rules.

4 TEST METHODOLOGY

4.1 GENERAL DESCRIPTION OF APPLIED STANDARDS

According to its specifications, the EUT must comply with the requirements of the following standards:
FCC 47 CFR Part 2, Subpart J
FCC 47 CFR Part 15, Subpart C
FCC KDB 558074 D01 15.247 Meas Guidance v05r02

4.2 MEASUREMENT EQUIPMENT USED

For Spurious Emissions Test

Equipment	Manufacturer	Model No.	Serial No.	Last Cal.	Cal. Interval
Pre-Amplifier	Bonn	BLMA 011001N	2213967A	2023/10/23	1Year
EMI Test Receiver	Rohde & Schwarz	ESR7	102551	2023/10/23	1Year
Bilog Antenna	Schwarzbeck	VULB9163	9163142	2024/7/8	2Year
Horn antenna	Schwarzbeck	BBHA9120D	9120D-1198	2023/6/2	2Year
Pre-Amplifier	Bonn	BLMA 0118-5G	2213967B-01	2023/10/23	1Year
Spectrum Analyzer	Rohde & Schwarz	FSV3044	101290	2023/10/23	1Year
Horn antenna	Schwarzbeck	BBHA9170	9170-399	2023/5/12	2Year
Pre-Amplifier	Lunar EM	LNA18G26-40	J1012131010 001	2024/5/11	1Year
Pre-Amplifier	Lunar EM	LNA26G40-40	J1013131028 001	2024/5/11	1Year
Loop Antenna	Schwarzbeck	FMZB1519	1519-012	2023/5/12	2Year
Wideband Radio Communication Tester	R&S	CMW500	171168	2023/9/14	1Year

4.3 DESCRIPTION OF TEST MODES

The EUT has been tested under its typical operating condition.
The EUT configuration for testing is installed on RF field strength measurement to meet the Commissions requirement and operating in a manner which intends to maximize its emission characteristics in a continuous normal application.

The Transmitter was operated in the normal operating mode. The TX frequency was fixed which was for the purpose of the measurements.

Test of channel included the lowest and middle and highest frequency to perform the test, then record on this report.

Those data rates (1Mbps for BT GFSK modulation; 2Mbps for BT pi/4-DQPSK modulation; 3Mbps for BT 8DPSK modulation) were used for all test.

Pre-defined engineering program for regulatory testing used to control the EUT for staying in continuous transmitting and receiving mode is programmed.

Frequency and Channel list:

Channel	Frequency (MHz)	Channel	Frequency (MHz)	Channel	Frequency (MHz)
0	2402	39	2441	…	…
1	2403	40	2442	76	2478
2	2404	41	2443	77	2479
…	…	…	…	78	2480
Note: fc=2402MHz+(k-1)×1MHz k=1 to 79					

Test Frequency and channel list:

Lowest Frequency		Middle Frequency		Highest Frequency	
Channel	Frequency (MHz)	Channel	Frequency (MHz)	Channel	Frequency (MHz)
0	2402	39	2441	78	2480

5 FACILITIES AND ACCREDITATIONS

5.1 FACILITIES

All measurement facilities used to collect the measurement data are located at:

Bldg 69, Majialong Industry Zone District, Nanshan District, Shenzhen, China.
The sites are constructed in conformance with the requirements of ANSI C63.7, ANSI C63.10 and CISPR Publication 22.

5.2 LABORATORY ACCREDITATIONS AND LISTINGS

Site Description

EMC Lab. : **Accredited by CNAS**
The Certificate Registration Number is L2291
The Laboratory has been assessed and proved to be in compliance with CNAS-CL01 (identical to ISO/IEC 17025:2017)

Accredited by FCC
Designation Number: CN1204
Test Firm Registration Number: 882943

Accredited by A2LA
The Certificate Number is 4321.01

Accredited by Industry Canada
The Conformity Assessment Body Identifier is CN0008

Name of Firm : EMTEK (SHENZHEN) CO., LTD.
Site Location : Building 69, Majialong Industry Zone, Nanshan District, Shenzhen, Guangdong, China

6 TEST SYSTEM UNCERTAINTY

The following measurement uncertainty levels have been estimated for tests performed on the apparatus:

Parameter	Uncertainty
Radiated Emission Test	±2.0dB
Temperature	±0.5℃
Humidity	±3%

Measurement Uncertainty for a level of Confidence of 95%.
NOTE: The results of this report do not take into account the uncertainty.

7 SETUP OF EQUIPMENT UNDER TEST

7.1 RADIO FREQUENCY TEST SETUP 1

The BT component's antenna ports(s) of the EUT are connected to the measurement instrument per an appropriate attenuator. The EUT is controlled by PC/software to emit the specified signals for the purpose of measurements.

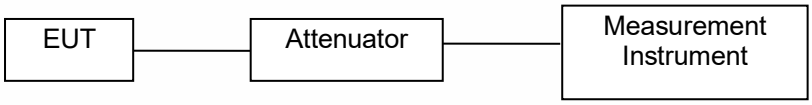

7.2 RADIO FREQUENCY TEST SETUP 2

The test site semi-anechoic chamber has met the requirement of NSA tolerance 4 dB according to the standards: ANSI C63.10. The test distance is 3m.The setup is according to the requirements in Section 13.1.4.1 of ANSI C63.10-2013 and CAN/CSA-CEI/IEC CISPR 22.

Below 30MHz：
The EUT is placed on a turntable 0.8meters above the ground in the chamber, 3 meter away from the antenna (loop antenna). The Antenna should be positioned with its plane vertical at the specified distance from the EUT and rotated about its vertical axis for maximum response at each azimuth about the EUT. The center of the loop shall be 1 m above the ground. For certain applications, the loop antenna plane may also need to be positioned horizontally at the specified distance from the EUT.

Above 30MHz：
The EUT is placed on a turntable 0.8meters above the ground in the chamber, 3 meter away from the antenna. The maximal emission value is acquired by adjusting the antenna height, polarisation and turntable azimuth. Normally, the height range of antenna is 1 m to 4 m, the azimuth range of turntable is 0° to 360°, and the receive antenna has two polarizations Vertical (V) and Horizontal (H).

Above 1GHz:
(Note: the FCC's permission to use 1.5m as an alternative per TCBC Conf call of Dec. 2, 2014.)
The EUT is placed on a turntable 1.5 meters above the ground in the chamber, 3 meter away from the antenna. The maximal emission value is acquired by adjusting the antenna height, polarisation and turntable azimuth. Normally, the height range of antenna is 1 m to 4 m, the azimuth range of turntable is 0° to 360°, and the receive antenna has two polarizations Vertical (V) and Horizontal (H).

(a) Radiated Emission Test Set-Up, Frequency Below 30MHz

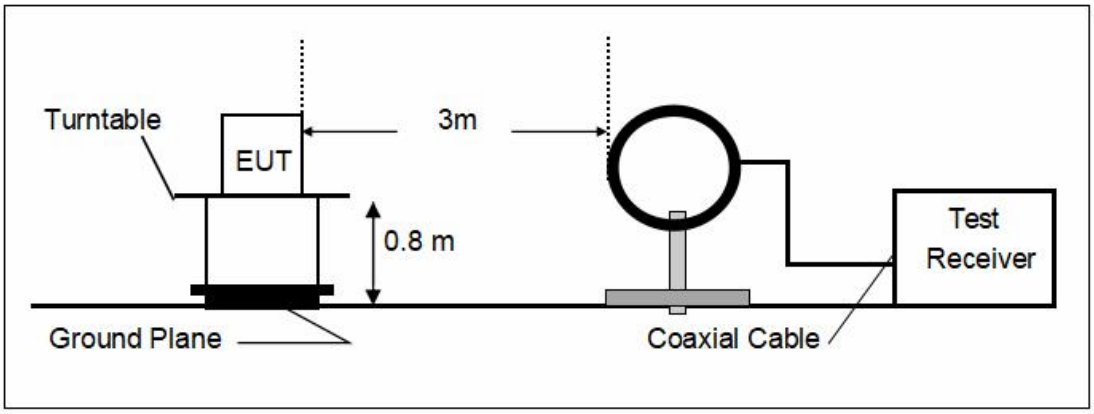

(b) Radiated Emission Test Set-Up, Frequency Below 1000MHz

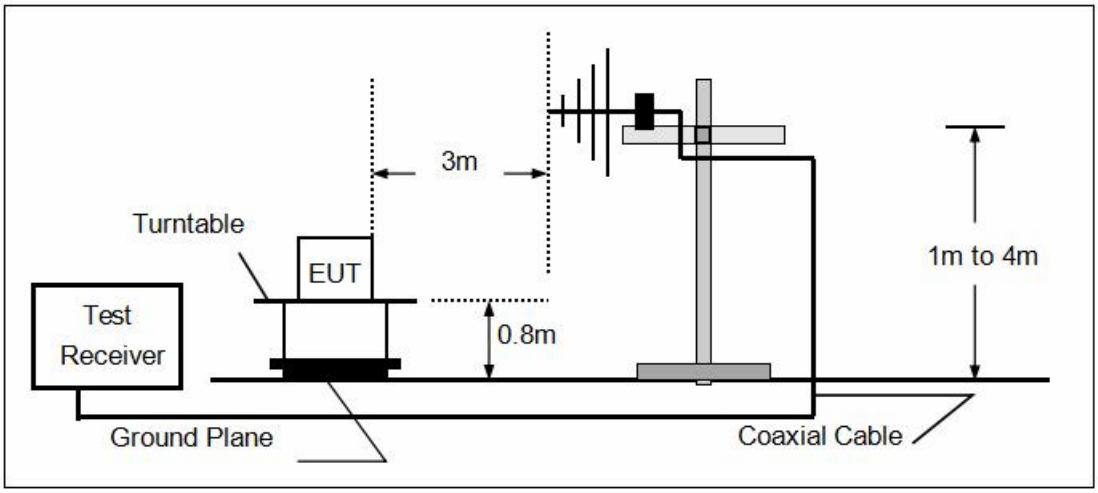

(c) Radiated Emission Test Set-Up, Frequency above 1000MHz

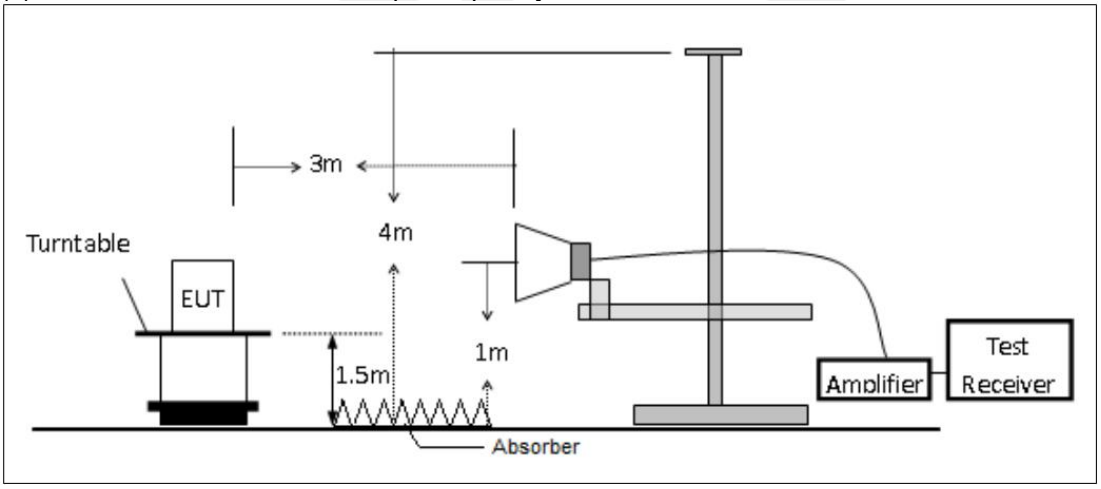

7.3 CONDUCTED EMISSION TEST SETUP

The mains cable of the EUT (Perfect Share Mini) must be connected to LISN. The LISN shall be placed 0.8m from the boundary of EUT and bonded to a ground reference plane for LISN mounted on top of the ground reference plane. This distance is between the closest points of the LISN and the EUT. All other units of the EUT and associated equipment shall be at least 0.8m from the LISN.

Ground connections, where required for safety purposes, shall be connected to the reference ground point of the LISN and, where not otherwise provided or specified by the manufacturer, shall be of same length as the mains cable and run parallel to the mains connection at a separation distance of not more than 0.8m.

According to the requirements in Section 13.1.4.1 of ANSI C63.10-2013 Conducted emissions from the EUT measured in the frequency range between 0.15 MHz and 30 MHz using CISPR Quasi-Peak and average detector mode.

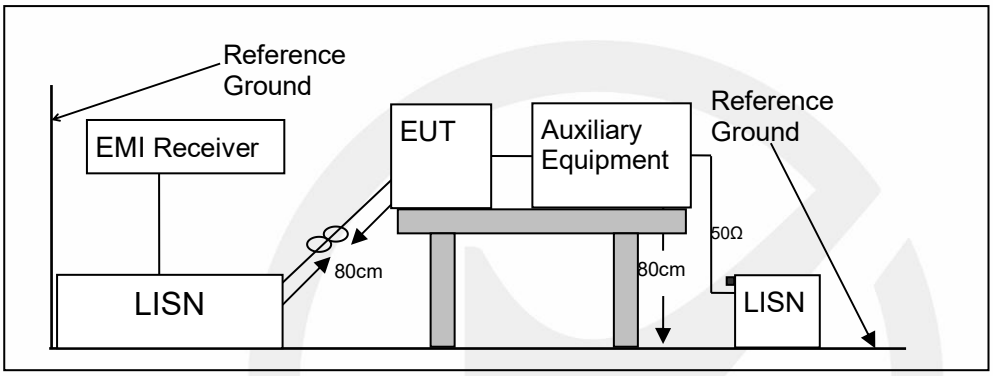

7.4 BLOCK DIAGRAM CONFIGURATION OF TEST SYSTEM

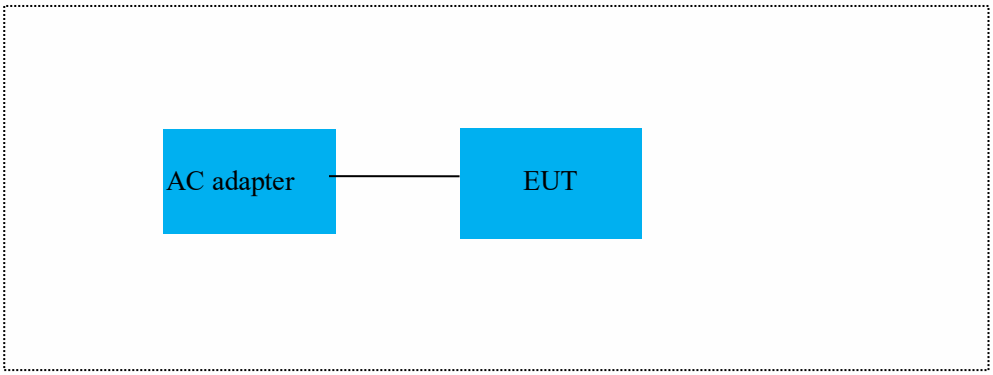

7.5 SUPPORT EQUIPMENT

N/A

Notes:

1.All the equipment/cables were placed in the worst-case configuration to maximize the emission during the test.

2.Grounding was established in accordance with the manufacturer's requirements and conditions for the intended use.

8 TEST REQUIREMENTS

8.1 RADIATED SPURIOUS EMISSION

8.1.1 Applicable Standard

According to FCC Part 15.247(d) and 15.209 and KDB 558074 D01 15.247 MEAS GUIDANCE v05r02.

8.1.2 Conformance Limit

According to FCC Part 15.247(d): radiated emissions which fall in the restricted bands, as defined in §15.205(a), must also comply with the radiated emission limits specified in §15.209(a) (see §15.205(c)).
According to FCC Part15.205, Restricted bands.

MHz	MHz	MHz	GHz
0.090-0.110	16.42-16.423	399.9-410	4.5-5.15
10.495-0.505	16.69475-16.69525	608-614	5.35-5.46
2.1735-2.1905	16.80425-16.80475	960-1240	7.25-7.75
4.125-4.128	25.5-25.67	1300-1427	8.025-8.5
4.17725-4.17775	37.5-38.25	1435-1626.5	9.0-9.2
4.20725-4.20775	73-74.6	1645.5-1646.5	9.3-9.5
6.215-6.218	74.8-75.2	1660-1710	10.6-12.7
6.26775-6.26825	123-138	2200-2300	14.47-14.5
8.291-8.294	149.9-150.05	2310-2390	15.35-16.2
8.362-8.366	156.52475-156.52525	2483.5-2500	17.7-21.4
8.37625-8.38675	156.7-156.9	2690-2900	22.01-23.12
8.41425-8.41475	162.0125-167.17	3260-3267	23.6-24.0
12.29-12.293	167.72-173.2	3332-3339	31.2-31.8
12.51975-12.52025	240-285	3345.8-3358	36.43-36.5
12.57675-12.57725	322-335.4	3600-4400	(2)
13.36-13.41			

According to FCC Part15.205, the level of any transmitter spurious emission in Restricted bands shall not exceed the level of the emission specified in the following table.

Restricted Frequency(MHz)	Field Strength (μV/m)	Field Strength (dBμV/m)	Measurement Distance
0.009-0.490	2400/F(KHz)	20 log (uV/m)	300
0.490-1.705	24000/F(KHz)	20 log (uV/m)	30
1.705-30	30	29.5	30
30-88	100	40	3
88-216	150	43.5	3
216-960	200	46	3
Above 960	500	54	3

8.1.3 Test Configuration

Test according to clause 7.2 radio frequency test setup 2.

8.1.4 Test Procedure

This test is required for any spurious emission that falls in a Restricted Band, as defined in Section 15.205. It must be performed with the highest gain of each type of antenna proposed for use with the EUT. Use the following spectrum analyzer settings:

For Above 1GHz:
The EUT was placed on a turn table which is 1.5m above ground plane.
Maximum procedure was performed on the highest emissions to ensure EUT compliance.
Span = wide enough to fully capture the emission being measured.
RBW = 1 MHz.
VBW ≥ RBW.
Sweep = auto.
Detector function = peak.
Trace = max hold.

For Below 1GHz:
The EUT was placed on a turn table which is 0.8m above ground plane.
Maximum procedure was performed on the highest emissions to ensure EUT compliance.
Span = wide enough to fully capture the emission being measured.
RBW = 100 kHz.
VBW ≥ RBW.
Sweep = auto.
Detector function = peak.
Trace = max hold.

For Below 30MHz:
The EUT was placed on a turn table which is 0.8m above ground plane.
Maximum procedure was performed on the highest emissions to ensure EUT compliance.
Span = wide enough to fully capture the emission being measured.
RBW = 9kHz.
VBW ≥ RBW.
Sweep = auto.
Detector function = peak.
Trace = max hold.

For Below 150KHz:
The EUT was placed on a turn table which is 0.8m above ground plane.
Maximum procedure was performed on the highest emissions to ensure EUT compliance.
Span = wide enough to fully capture the emission being measured.
RBW = 200Hz.
VBW ≥ RBW.
Sweep = auto.
Detector function = peak.
Trace = max hold.

Follow the guidelines in ANSI C63.10-2013 with respect to maximizing the emission by rotating the EUT, measuring the emission while the EUT is situated in three orthogonal planes (if appropriate), adjusting the measurement antenna height and polarization, etc. A pre-amp and a high pass filter are required for this test, in order to provide the measuring system with sufficient sensitivity. Allow the trace to stabilize. The peak reading of the emission, after being corrected by the antenna factor, cable loss, pre-amp gain, etc., is the peak field strength, which must comply with the limit specified in Section 15.35(b). Submit this data.
Now set the VBW to 10 Hz, while maintaining all of the other instrument settings. This peak level, once corrected, must comply with the limit specified in Section 15.209. If the dwell time per channel of the hopping signal is less than 100 ms, then the reading obtained with the 10 Hz VBW may be further adjusted by a “duty cycle correction factor”, derived from 20log(dwell time/100 ms), in an effort to demonstrate compliance with the 15.209 limit. Submit this data.
Repeat above procedures until all frequency measured was complete.

8.1.5 Test Results

■ Spurious Emission below 30MHz (9KHz to 30MHz)

Temperature:	26℃
Relative Humidity:	60%
ATM Pressure:	1011 mbar

Freq. (MHz)	Ant.Pol. H/V	Emission Level(dBuV/m)		Limit 3m(dBuV/m)		Over(dB)	
		PK	AV	PK	AV	PK	AV
--	--	--	--	--	--	--	--

Note: Data of measurement within this frequency range shown " -- " in the table above means the reading of emissions are attenuated more than 20dB below the permissible limits or the field strength is too small to be measured.

■ Spurious Emission Above 1GHz (1GHz to 25GHz)

NOTE: All the modulation modes are tested, the data of the worst mode are described in the table.

Test mode: GFSK Frequency: Channel 0: 2402MHz

Freq. (MHz)	Ant.Pol.	Emission Level(dBuV/m)	Limit 3m(dBuV/m)	Over(dB)	Detector
8006.25	H	58.89	74.00	15.11	Peak
9945	H	62.44	74.00	11.56	Peak
17688.75	H	66.15	74.00	7.85	Peak
8006.25	H	39.88	54.00	14.12	Avg
9945	H	40.94	54.00	13.06	Avg
17688.75	H	46.03	54.00	7.97	Avg
8006.25	V	59.41	74.00	14.59	Peak
9941.25	V	62.77	74.00	11.23	Peak
17298.75	V	64.82	74.00	9.18	Peak
8006.25	V	40.26	54.00	13.74	Avg
9941.25	V	40.95	54.00	13.05	Avg
17298.75	V	45.29	54.00	8.71	Avg

Test mode: GFSK Frequency: Channel 39: 2441MHz

Freq. (MHz)	Ant.Pol.	Emission Level(dBuV/m)	Limit 3m(dBuV/m)	Over(dB)	Detector
8030.625	H	74.00	14.87	74.00	Peak
9873.75	H	74.00	10.96	74.00	Peak
17628.75	H	74.00	8.90	74.00	Peak
8030.625	H	39.84	54.00	14.16	Avg
9873.75	H	40.42	54.00	13.58	Avg
17628.75	H	46.59	54.00	7.41	Avg
7974.375	V	58.94	74.00	15.06	Peak
9915	V	63.38	74.00	10.62	Peak
17201.25	V	65.40	74.00	8.60	Peak
7974.375	V	39.33	54.00	14.67	Avg
9915	V	41.22	54.00	12.78	Avg
17201.25	V	46.93	54.00	7.07	Avg

Test mode:	GFSK	Frequency:	Channel 78: 2480MHz

Freq. (MHz)	Ant.Pol.	Emission Level(dBuV/m)	Limit 3m(dBuV/m)	Over(dB)	Detector
7970.625	H	59.03	74.00	14.97	Peak
9903.75	H	63.47	74.00	10.53	Peak
16674.375	H	65.66	74.00	8.34	Peak
7970.625	H	39.14	54.00	14.86	Avg
9903.75	H	41.46	54.00	12.54	Avg
16674.375	H	45.18	54.00	8.82	Avg
7488.75	V	56.56	74.00	17.44	Peak
9916.875	V	63.28	74.00	10.72	Peak
17775	V	66.75	74.00	7.25	Peak
7488.75	V	37.57	54.00	16.43	Avg
9916.875	V	41.25	54.00	12.75	Avg
17775	V	45.74	54.00	8.26	Avg

Note:
(1) All Readings are Peak Value (VBW=3MHz) and Peak Value (VBW=10Hz).
(2) Emission Level= Reading Level+Probe Factor +Cable Loss.
(3) The reading of emissions are attenuated more than 20dB below the permissible limits or the field strength is too small to be measured.
(4) The radiation measurements are performed in X, Y, Z axis positioning for transmitting mode, and found the X axis positioning which it is the worst case, only the worst data is recorded in the report.

■ Spurious Emission in Restricted Band 2310-2390MHz and 2483.5-2500MHz

NOTE: All the modulation modes are tested, the data of the worst mode are described in the table.

Test mode:	GFSK	Frequency:	Channel 0: 2402MHz

Freq. (MHz)	Ant.Pol.	Emission Level(dBuV/m)	Limit 3m(dBuV/m)	Over(dB)	Detector
2384.77	V	44.28	74.00	29.72	Peak
2384.77	V	37.15	54.00	16.85	Avg
2380.74	H	44.28	74.00	29.72	Peak
2380.74	H	37.06	54.00	16.94	Avg

Test mode:	GFSK	Frequency:	Channel 78: 2480MHz

Freq. (MHz)	Ant.Pol.	Emission Level(dBuV/m)	Limit 3m(dBuV/m)	Over(dB)	Detector
2483.78	V	44.05	74.00	29.95	Peak
2483.78	V	37.77	54.00	16.23	Avg
2483.92	H	44.11	74.00	29.89	Peak
2483.92	H	37.56	54.00	16.44	Avg

Test mode:	GFSK	Frequency:	Hopping

Freq. (MHz)	Ant.Pol.	Emission Level(dBuV/m)	Limit 3m(dBuV/m)	Over(dB)	Detector
2385.3284	V	43.86	74.00	30.14	peak
2489.1664	V	46.02	74.00	27.98	peak
2385.3284	V	37.71	54.00	16.29	AVG
2489.1664	V	37.31	54.00	16.69	AVG
2388.4328	H	43.49	74.00	30.51	peak
2494.4882	H	45.75	74.00	28.25	peak
2388.4328	H	37.08	54.00	16.92	AVG
2494.4882	H	37.81	54.00	16.19	AVG

Note:
(1) All Readings are Peak Value (VBW=3MHz) and Peak Value (VBW=10Hz).
(2) Emission Level= Reading Level+Probe Factor +Cable Loss.
(3) The reading of emissions are attenuated more than 20dB below the permissible limits or the field strength is too small to be measured.

Test Model	Spurious Emission in Restricted Band 2310-2390MHz BT Channel 0: 2402MHz	GFSK Test By: CZF	H

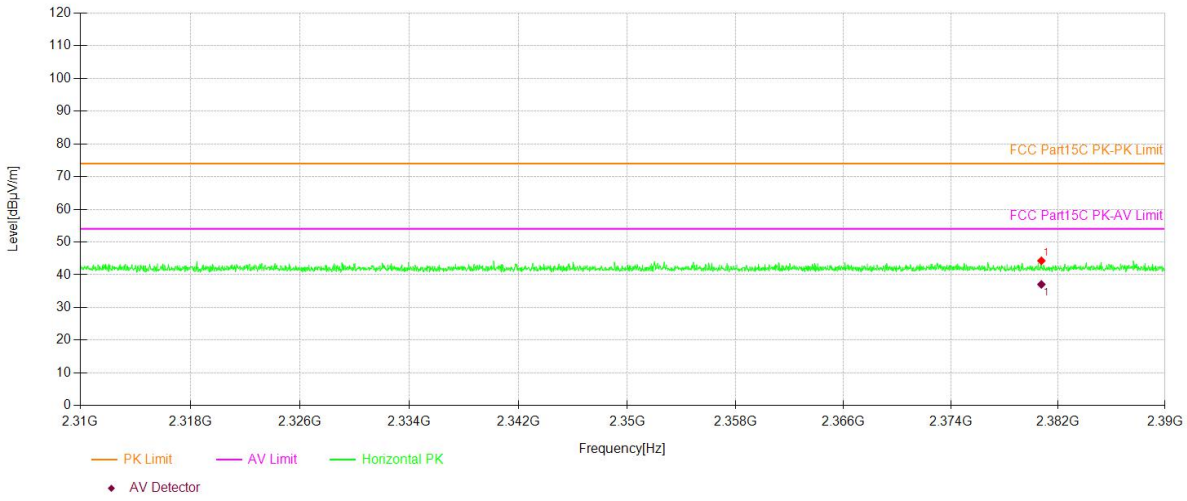

Test Model	Spurious Emission in Restricted Band 2310-2390MHz BT Channel 0: 2402MHz	GFSK Test By: CZF	V

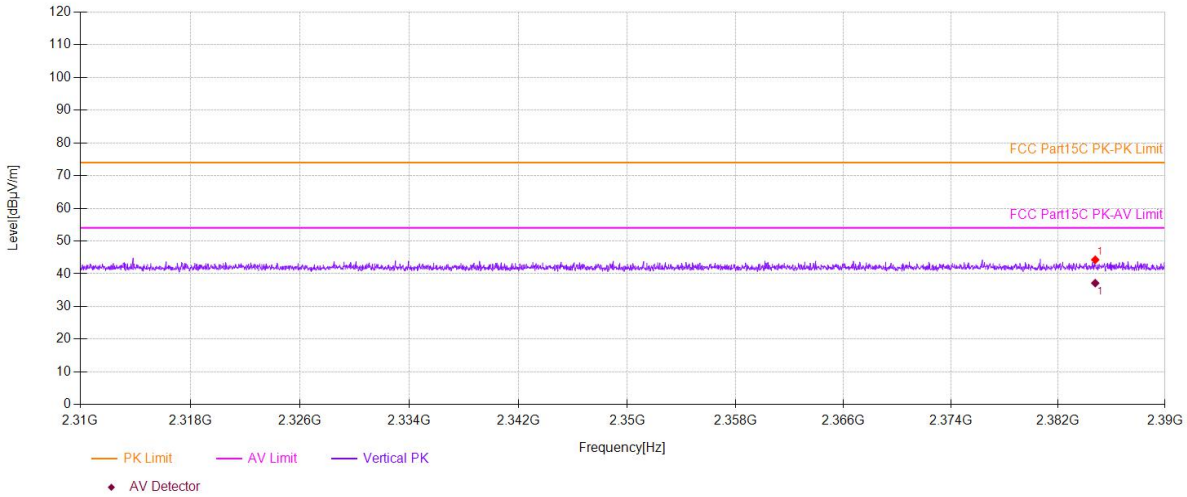

Test Model	Spurious Emission in Restricted Band 2483.5-2500MHz BT Channel 78: 2480MHz	GFSK Test By: CZF	H

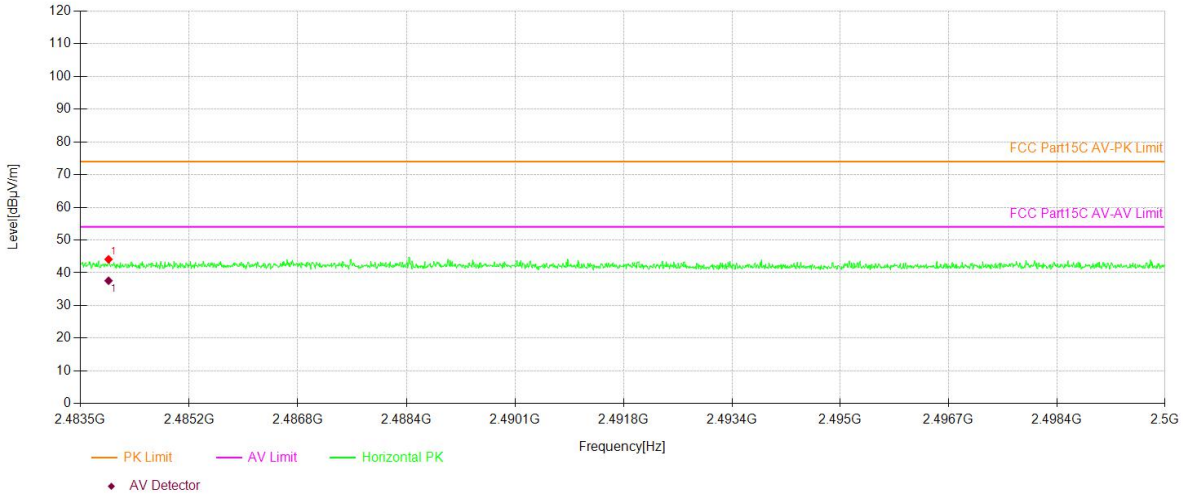

Test Model	Spurious Emission in Restricted Band 2483.5-2500MHz BT Channel 78: 2480MHz	GFSK Test By: CZF	V

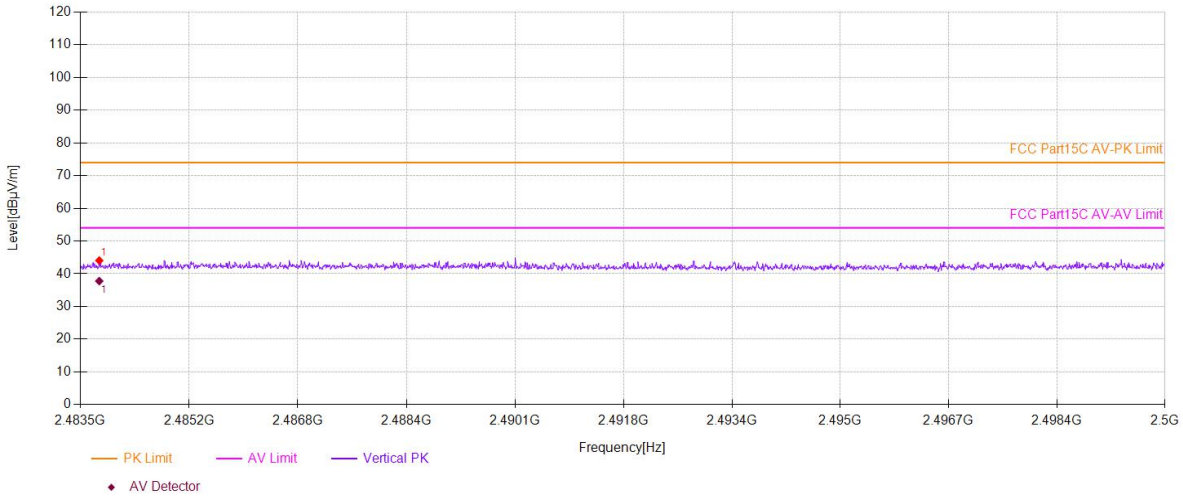

Test Model	Spurious Emission in Restricted Band 2310-2390MHz and 2400-2483.5MHz BT Hopping	GFSK	H
		Test By: CZF	

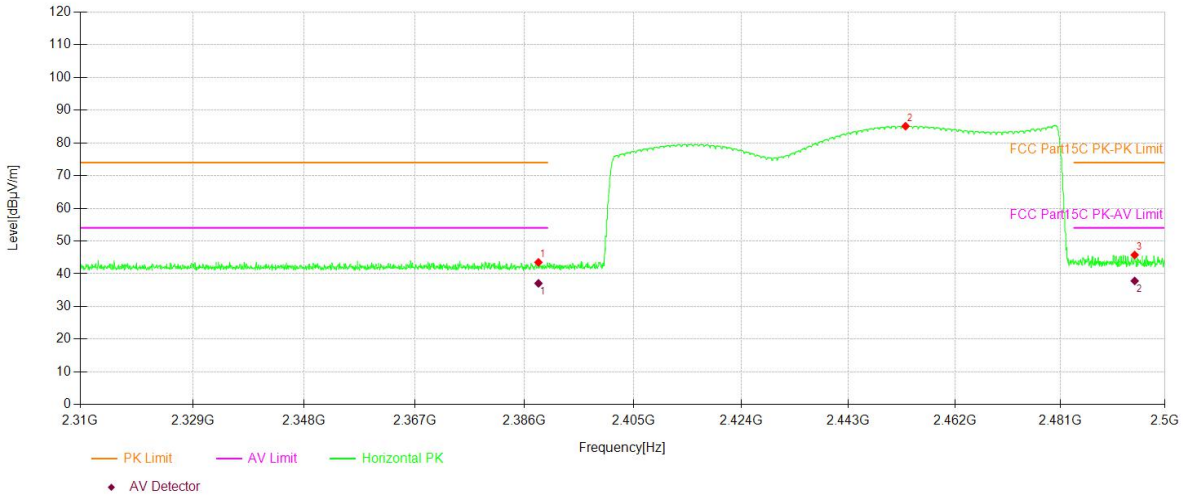

Test Model	Spurious Emission in Restricted Band 2310-2390MHz and 2400-2483.5MHz BT Hopping	GFSK	V
		Test By: CZF	

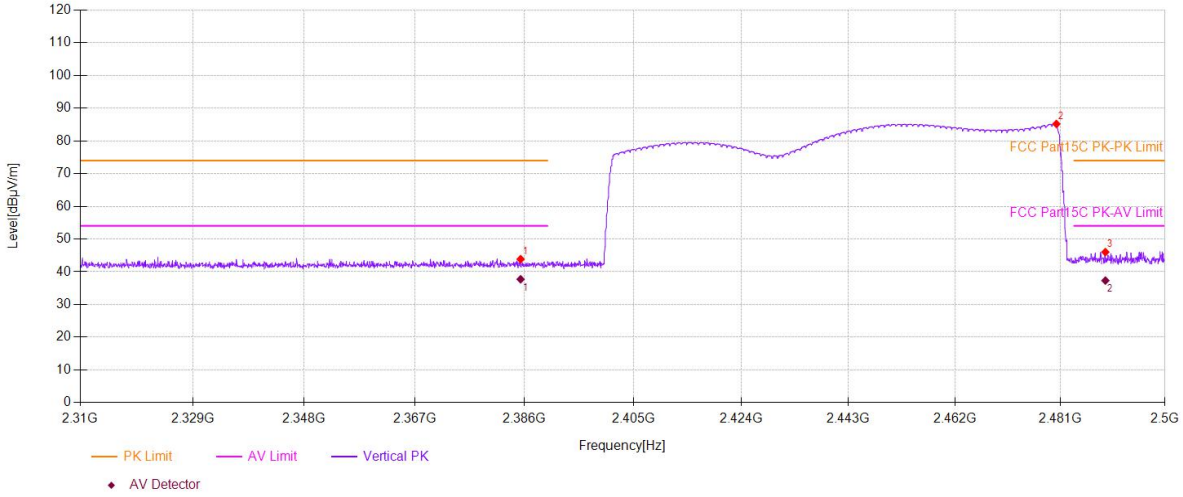

■ Spurious Emission below 1GHz (30MHz to 1GHz)

Bluetooth (GFSK, pi/4-DQPSK, 8DPSK) mode have been tested, and the worst result(GFSK) was report as below:

Test mode:	GFSK	Frequency:	Channel 0: 2402MHz

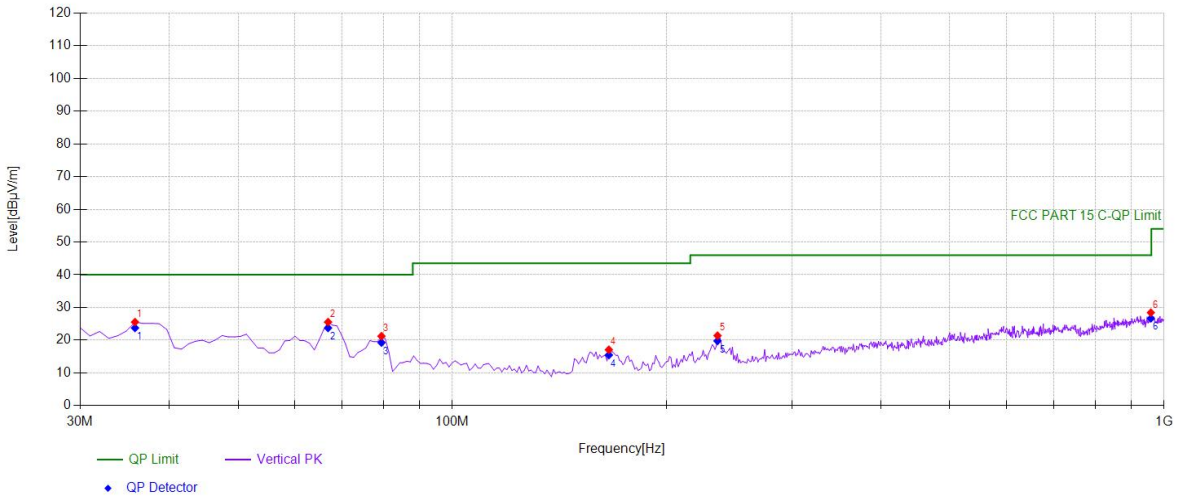

Suspected Data List								
NO.	Freq. [MHz]	Reading [dBμV]	Factor [dB/m]	Level [dBμV/m]	Detector	Limit [dBμV/m]	Margin [dB]	Polarity
1	35.8258	43.52	-17.96	25.56	PK	40.00	14.44	Vertical
2	66.8969	43.83	-18.27	25.56	PK	40.00	14.44	Vertical
3	79.5195	41.37	-20.12	21.25	PK	40.00	18.75	Vertical
4	165.9350	36.21	-19.11	17.10	PK	43.50	26.40	Vertical
5	235.8450	37.21	-15.81	21.40	PK	46.00	24.60	Vertical
6	958.2480	30.93	-2.48	28.45	PK	46.00	17.55	Vertical

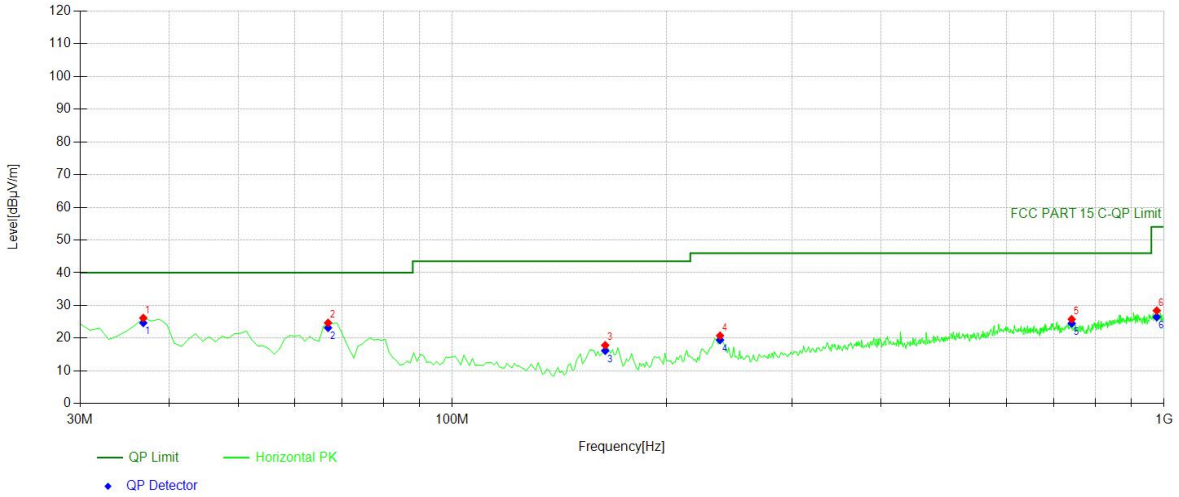

Suspected Data List								
NO.	Freq. [MHz]	Reading [dBμV]	Factor [dB/m]	Level [dBμV/m]	Detector	Limit [dBμV/m]	Margin [dB]	Polarity
1	36.7968	44.01	-17.83	26.18	PK	40.00	13.82	Horizontal
2	66.8969	42.96	-18.27	24.69	PK	40.00	15.31	Horizontal
3	163.994	37.06	-19.21	17.85	PK	43.50	25.65	Horizontal
4	237.787	36.54	-15.76	20.78	PK	46.00	25.22	Horizontal
5	741.721	31.55	-5.74	25.81	PK	46.00	20.19	Horizontal
6	976.696	30.82	-2.39	28.43	PK	54.00	25.57	Horizontal

Test mode:	GFSK	Frequency:	Channel 39: 2441MHz

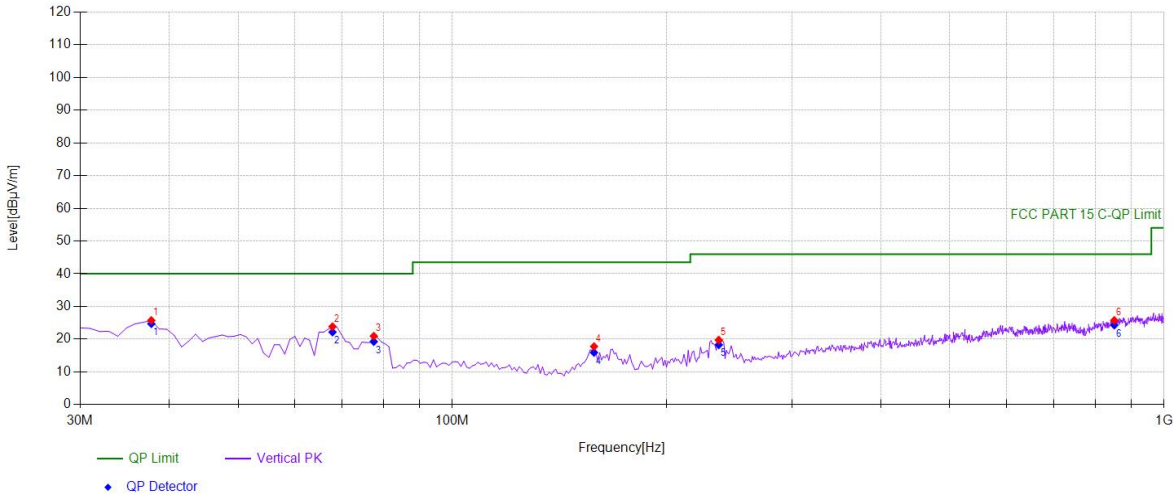

Suspected Data List								
NO.	Freq. [MHz]	Reading [dBμV]	Factor [dB/m]	Level [dBμV/m]	Detector	Limit [dBμV/m]	Margin [dB]	Polarity
1	37.7678	43.47	-17.71	25.76	PK	40.00	14.24	Vertical
2	67.8679	42.26	-18.40	23.86	PK	40.00	16.14	Vertical
3	77.5776	40.78	-19.83	20.95	PK	40.00	19.05	Vertical
4	158.168	37.21	-19.43	17.78	PK	43.50	25.72	Vertical
5	236.816	35.56	-15.79	19.77	PK	46.00	26.23	Vertical
6	851.441	29.88	-4.09	25.79	PK	46.00	20.21	Vertical

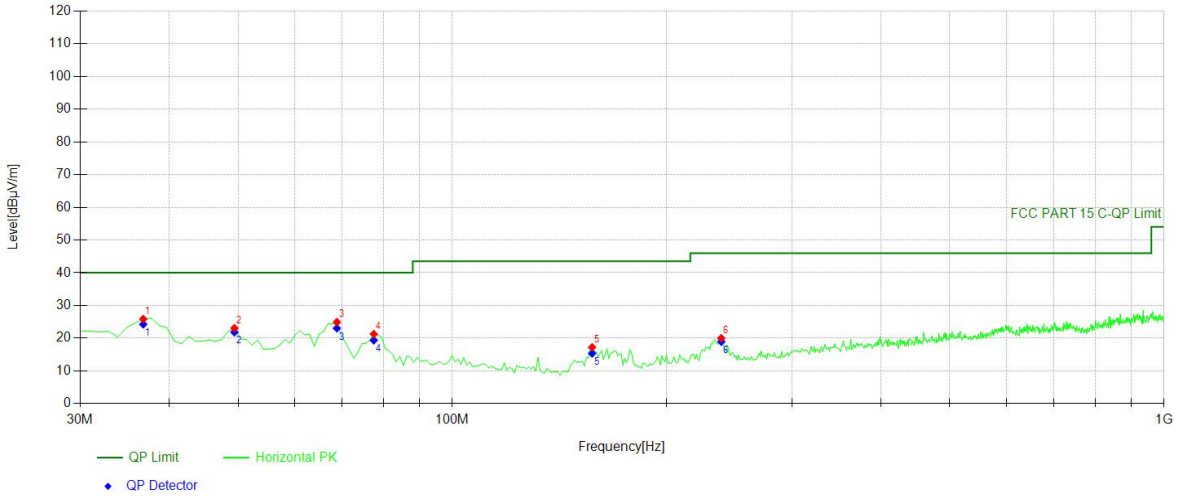

Suspected Data List								
NO.	Freq. [MHz]	Reading [dBμV]	Factor [dB/m]	Level [dBμV/m]	Detector	Limit [dBμV/m]	Margin [dB]	Polarity
1	36.7968	43.68	-17.83	25.85	PK	40.00	14.15	Horizontal
2	49.4194	39.17	-16.09	23.08	PK	40.00	16.92	Horizontal
3	68.8388	43.46	-18.53	24.93	PK	40.00	15.07	Horizontal
4	77.5776	41.09	-19.83	21.26	PK	40.00	18.74	Horizontal
5	157.1972	36.67	-19.44	17.23	PK	43.50	26.27	Horizontal
6	238.7588	35.73	-15.73	20.00	PK	46.00	26.00	Horizontal

Test mode:	GFSK	Frequency:	Channel 78: 2480MHz

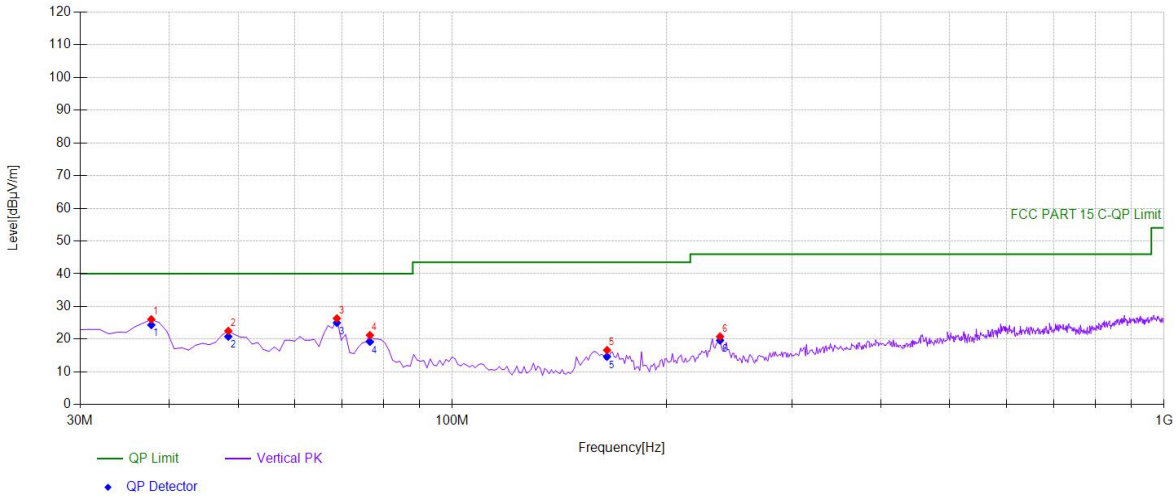

Suspected Data List								
NO.	Freq. [MHz]	Reading [dBµV]	Factor [dB/m]	Level [dBµV/m]	Detector	Limit [dBµV/m]	Margin [dB]	Polarity
1	37.7678	43.79	-17.71	26.08	PK	40.00	13.92	Vertical
2	48.4484	38.76	-16.22	22.54	PK	40.00	17.46	Vertical
3	68.8388	44.89	-18.53	26.36	PK	40.00	13.64	Vertical
4	76.6066	40.92	-19.69	21.23	PK	40.00	18.77	Vertical
5	164.965	35.82	-19.16	16.66	PK	43.50	26.84	Vertical
6	237.7870	36.56	-15.76	20.80	PK	46.00	25.20	Vertical

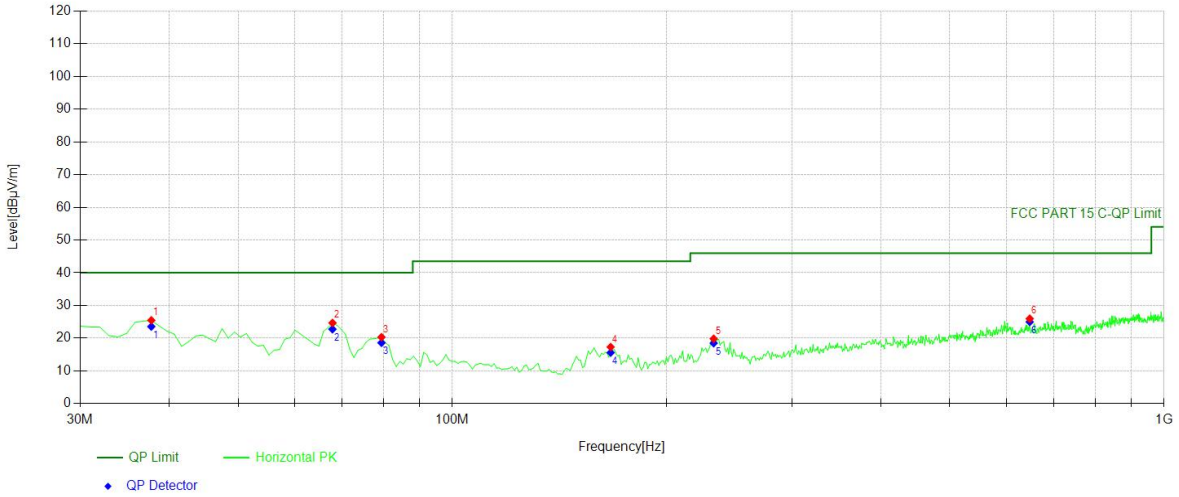

Suspected Data List								
NO.	Freq. [MHz]	Reading [dBµV]	Factor [dB/m]	Level [dBµV/m]	Detector	Limit [dBµV/m]	Margin [dB]	Polarity
1	37.7678	43.18	-17.71	25.47	PK	40.00	14.53	Horizontal
2	67.8679	43.07	-18.40	24.67	PK	40.00	15.33	Horizontal
3	79.5195	40.44	-20.12	20.32	PK	40.00	19.68	Horizontal
4	166.906	36.37	-19.06	17.31	PK	43.50	26.19	Horizontal
5	232.932	35.76	-15.91	19.85	PK	46.00	26.15	Horizontal
6	647.537	33.30	-7.32	25.98	PK	46.00	20.02	Horizontal

Detail of factor for radiated emission:

Frequency(MHz)	Ant_F(dB)	Cab_L(dB)	Preamp(dB)	Correct Factor(dB)
0.009	20.6	0.03	\	20.63
0.15	20.7	0.1	\	20.8
1	20.9	0.15	\	21.05
10	20.1	0.28	\	20.38
30	18.8	0.45	\	19.25
30	11.7	0.62	27.9	-15.58
100	12.5	1.02	27.8	-14.28
300	12.9	1.91	27.5	-12.69
600	19.2	2.92	27	-4.88
800	21.1	3.54	26.6	-1.96
1000	22.3	4.17	26.2	0.27
1000	25.6	1.76	41.4	-14.04
3000	28.9	3.27	43.2	-11.03
5000	31.1	4.2	44.6	-9.3
8000	36.2	5.95	44.7	-2.55
10000	38.4	6.3	43.9	0.8
12000	38.5	7.14	42.3	3.34
15000	40.2	8.15	41.4	6.95
18000	45.4	9.02	41.3	13.12
18000	37.9	1.81	47.9	-8.19
21000	37.9	1.95	48.7	-8.85
25000	39.3	2.01	42.8	-1.49
28000	39.6	2.16	46.0	-4.24
31000	41.2	2.24	44.5	-1.06
34000	41.5	2.29	46.6	-2.81
37000	43.8	2.30	46.4	-0.3
40000	43.2	2.50	42.2	3.5

--- End of Report ---

声　明
Statement

1．本报告无授权批准人签字及“检验检测专用章”无效。
1．This report is invalid without the signature of the authorized approver and "special seal for testing".

2．未经许可本报告不得部分复制。
2．This report shall not be copied partly without authorization.

3．本报告的检测结果仅对送测样品有效，委托方对样品的代表性和资料的真实性负责。
3．The test results or observations are applicable only to tested sample. Client shall be responsible for representativeness of the sample and authenticity of the material.

4．本检测报告中检测项目标注有特殊符号则该项目不在资质认定范围内，仅作为客户委托、科研、教学或内部质量控制等目的使用。
4．The observations or tests with special mark fall outside the scope of accreditation, and are only used for purpose of commission, research, training, internal quality control etc.

5．本检测报告以实测值进行符合性判定，未考虑不确定度所带来的风险，本实验室不承担相关责任，特别约定、标准或规范中有明确规定的除外。
5．The test results or observations are provided in accordance with measured value, without taking risks caused by uncertainty into account. Without explicit stipulation in special agreements, standards or regulations, EMTEK shall not assume any responsibility.

6．对本检验报告若有异议，请于收到报告之日起 20 日内提出。
6．Objections shall be raised within 20 days from the date receiving the report.