BL-M8800DU6-40L

802.11 287Mbps WLAN + BLE v5.4

USB Module Specification

SHENZHEN BILIAN ELECTRONIC CO., LTD

Add: 10~11/F, Building 1A, Huaqiang idea park, Guangming district, Shenzhen. Guangdong, China

Web: www.b-link.net.cn

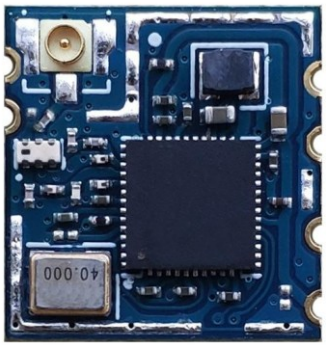

（Top View）

（Bottom View）

Module Name: BL-M8800DU6-40L	
WLAN +BLE USB Module	
Module Type: 802.11a/b/g/n/ac 287Mbps WLAN +BLE v5.4 USB Module	
Revision: V1.1	
Customer Approval:	
Company:	
Title:	
Signature:	Date:
Approval:	
Title:	
Signature:	Date:

Revision History

Revision	Summary	Release Date	Revised By
V1.0	Official release	2024-03-30	Garry
V1.1	Modify type of UART TX/RX	2024-12-04	Ch

1. Introduction

BL-M8800DU6-40L is a highly integrated Dual-band WLAN+Bluetooth Combo module. It combines a 1T1R Dual-band WLAN subsystem and a BLE v5.4 subsystem. This module compatible IEEE 802.11 a/b/g/n/ac standard and provides the maximum PHY rate up to 287Mbps, offering feature-rich wireless connectivity at high standards, and delivering reliable, cost-effective, high throughput from an extended distance.

1.1 Features

- Operating Frequencies: 2.4~2.4835GHz or 5.15~5.25GHz
- Wireless PHY rate can reach up to 287Mbps with 20/40MHz bandwidth
- Host Interface is USB2.0
- Support STA, AP, WLAN Direct modes concurrently
- Support BT Low Energy mode only
- Connect to external antenna through IPEX-1 / MHF-1 connector

1.2 Block Diagram

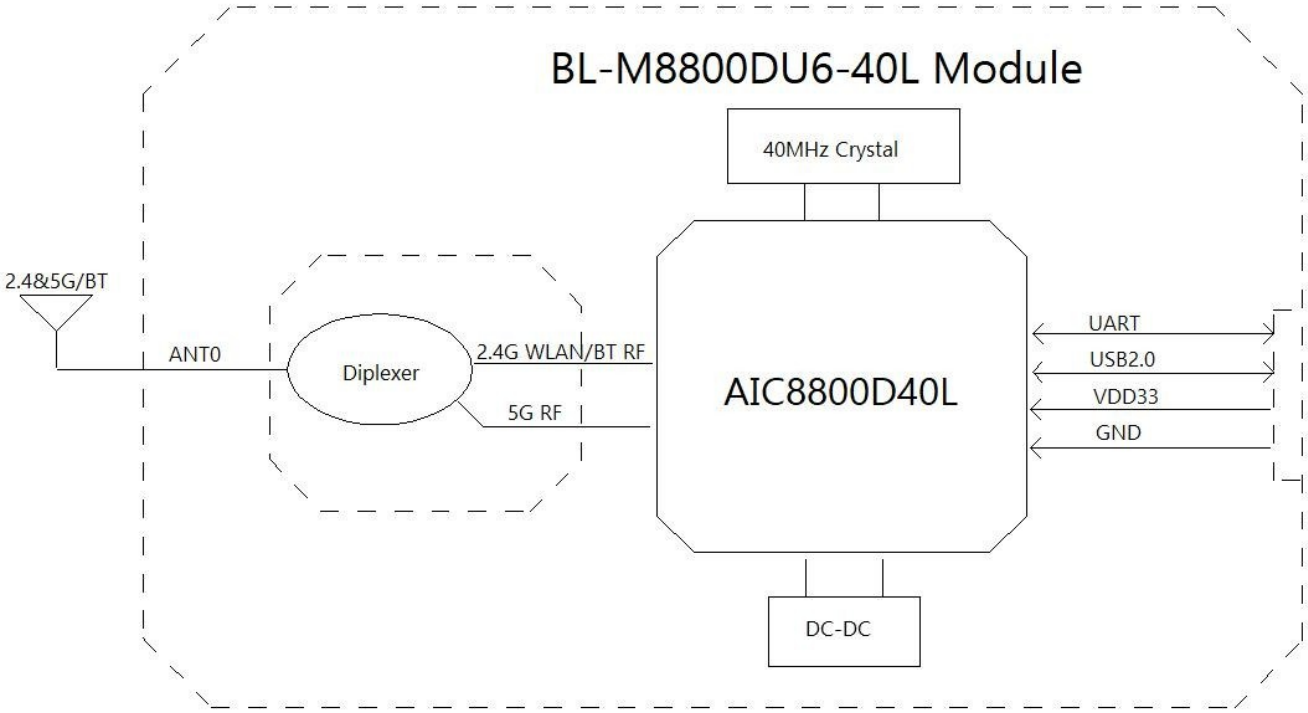

1.3 General Specifications

Module Name	BL-M8800DU6-40L
Chipset	AIC8800D40L
WLAN Standards	IEEE802.11a/b/g/n/ac
Host Interface	USB2.0 for WLAN & Bluetooth
Antenna	Connect to the external antenna through IPEX-1 / MHF-1 connector
Dimension	13.0*12.3*2.1mm (L*W*H; Tolerance: ±0.3mm_L/W, ±0.2mm_H)
Power Supply	3.3V±0.2V main power supply @700mA (Max)
Operation Temperature	-20℃ to +70℃
Operation Humidity	10% to 95% RH (Non-Condensing)

2. Pin Assignments

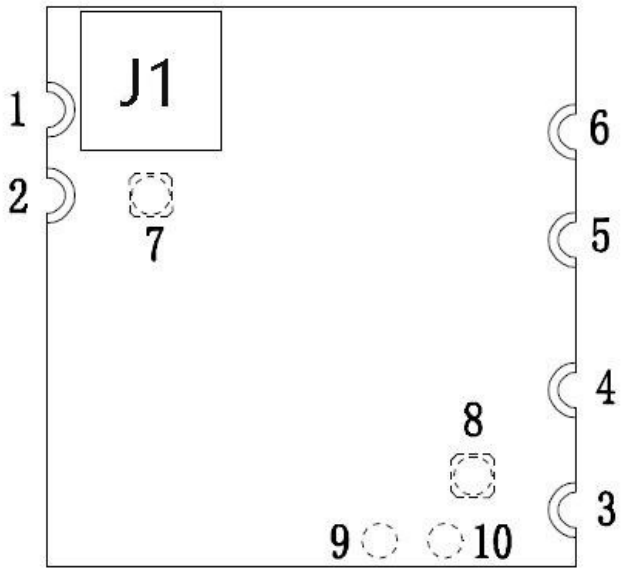

(Top view)

2.1 Pin Definition

No	Pin Name	Type	I/O Level	Module Pin Description
1	GND	RF	/	RF Ground connections

2	ANT0	-	/	NC (Reserved RF Pad)
3	VDD33	P	/	3.3V main power supply
4	USB_DM	A I/O	/	USB 2.0 Device High Speed Interface differential pair
5	USB_DP	A I/O	/	USB 2.0 Device High Speed Interface differential pair
6	GND	P	/	Ground connection
7	GND	RF	/	Auxiliary RF Ground connection PAD for ANT (It can be left floating, but grounding is strongly recommended to enhance ground connectivity and avoid RF interference)
8	GND	P	/	Auxiliary Ground connection PAD for power and USB (It can be left floating, but grounding is strongly recommended to reduce the power loop area and avoid interference with RF)
9	UART0_RX	I	VDD33	High-Speed UART Data In (Debug pin)
10	UART0_TX	O	VDD33	High-Speed UART Data Out (Debug pin)
	J1	RF	/	IPEX-1 / MHF-1 connector for 2.4G WLAN/5G WLAN/2.4G BT ANT

P: Power or Ground; I: Input; O :Output; A I/O: Analog In/Output; RF: Analog RF Port or RF Ground

3. Electrical and Thermal Specifications

3.1 Recommended Operating Conditions

Parameters		Min	Typ	Max	Units
Ambient Operating Temperature		-20	25	70	℃
External Antenna VSWR			1.7	2.1	/
Supply Voltage	VDD33	3.1	3.3	3.5	V

3.2 DC Electrical Specification (Recommended Operation Conditions)

Symbol	Description	Min	Typ	Max	Units
VIL	CMOS Low Level Input Voltage	0	--	0.3*VDD33	V
VIH	CMOS High Level Input Voltage	0.7*VDD33	--	VDD33	V
VTH	CMOS Threshold Voltage	--	0.5*VDD33	--	V

3.3 Current Consumption

Conditions : USB,VDD33=3.3V; Ta:25℃;			
Use Case	VDD33 Current		
	Typ(I_{RMS})	Max(I_{Peak})	Units
WLAN Unassociated (Linux USB Driver)	82	87	mA
2.4G WLAN throughput 180Mbps (Linux USB Driver)	181	340	mA
5G WLAN throughput 180Mbps (Linux USB Driver)	238	540	mA
2.4G 11b 1Mbps TX@18dBm (TX RF test)	88	295	mA
2.4G 11g 6Mbps TX@18dBm (TX RF test)	112	343	mA
2.4G 11n HT20_MCS0 TX@17dBm (TX RF test)	106	335	mA
5G 11a 6Mbps TX@17dBm (TX RF test)	168	519	mA
5G 11n HT20_MCS0 TX@17dBm (TX RF test)	163	527	mA
BT LE_1M TX@6dBm (BT RF test, WLAN disable)	40	52	mA
BT LE_1M RX Active (BT RF test, WLAN disable)	25	33	mA

4. WLAN & Bluetooth RF Specifications

4.1 2.4G RF Specification

Conditions : VDD33=3.3V ; Ta:25℃	
Features	Description
WLAN Standard	IEEE 802.11b/g/n
Frequency Range	2.4~2.4835GHz (2.4GHz ISM Band)
Channels	Ch1~Ch13 (For 20MHz Channels)

Modulation	802.11b (DSSS): DBPSK, DQPSK, CCK; 802.11g (OFDM): BPSK, QPSK, 16QAM, 64QAM; 802.11n (OFDM): BPSK, QPSK, 16QAM, 64QAM;
Data Rate	802.11b: 1, 2, 5.5, 11Mbps; 802.11g: 6, 9, 12, 18, 24, 36, 48, 54Mbps; 802.11n (HT20): MCS0~MCS7(1T1R_SISO) 6.5~72.2Mbps; 802.11n (HT40): MCS0~MCS7(1T1R_SISO) 13.5~150Mbps;
Frequency Tolerance	≦ ±20ppm

2.4G Transmitter Specifications (TX power tolerance calibrated, customers can define the target TX power within recommended range by modifying configuration file of the driver software, Customers must define the TX power same or lower than recommended Target TX Power as below.)

TX Rate	Recommended Target TX Power (dBm)	TX Power Tolerance (dBm)	EVM (dB)
802.11b@1Mbps	18	±2	≦-10
802.11b@11Mbps	18	±2	≦-10
802.11g@6Mbps	18	±2	≦-10
802.11g@54Mbps	16	±2	≦-25
802.11n@HT20_MCS0	17	±2	≦-10
802.11n@HT20_MCS7	15	±2	≦-28
802.11n@HT40_MCS0	17	±2	≦-10
802.11n@HT40_MCS7	15	±2	≦-28

2.4G Receiver Specifications

RX Rate	Min Input Level (Typ. dBm)	Max Input Level (Typ. dBm)	PER
802.11b@1Mbps	-96	-5	< 8%
802.11b@11Mbps	-88	-5	< 8%
802.11g@6Mbps	-92	-5	< 10%
802.11g@54Mbps	-75	-5	< 10%
802.11n@HT20_MCS0	-92	-5	< 10%
802.11n@HT20_MCS7	-73	-5	< 10%
802.11n@HT40_MCS0	-89	-5	< 10%

802.11n@HT40_MCS7	-71	-5	< 10%

4.2 5G WLAN RF Specification

Conditions: VDD33=3.3V; Ta:25℃	
Features	**Description**
WLAN Standard	IEEE 802.11a/n/ac
Frequency Range	5.15~5.25GHz (5GHz ISM Band)
Channels	Ch36, Ch40, Ch44, Ch48 (For 20MHz Channels) Ch38, Ch46 (For 40MHz Channels) Ch42 (For 80MHz Channels)
Modulation	802.11a (OFDM): BPSK, QPSK, QAM16, QAM64; 802.11n (OFDM): BPSK, QPSK, QAM16, QAM64; 802.11ac (OFDM): BPSK, QPSK, QAM16, QAM64, QAM256;
Data Rate	802.11a: 6, 9, 12, 18, 24, 36, 48, 54Mbps; 802.11n (HT20): MCS0~MCS7 6.5~72.2Mbps; 802.11n (HT40): MCS0~MCS7 13.5~150Mbps; 802.11ac (VHT20): MCS0~MCS8(1T1R) 6.5~86.7Mbps; 802.11ac (VHT40): MCS0~MCS9(1T1R) 13.5~200Mbps;
Frequency Tolerance	≦ ±20ppm

5G Transmitter Specifications (TX power tolerance calibrated, customers can define the target TX power within recommended range by modifying configuration file of the driver software, Customers must define the TX power same or lower than recommended Target TX Power as below.)

TX Rate	Recommended Target TX Power (dBm)	TX Power Tolerance (dBm)	EVM (dB)
802.11a@6Mbps	17	±2	≦-10
802.11a@54Mbps	16	±2	≦-25

802.11n@HT20_MCS0	17	±2	≦-10
802.11n@HT20_MCS7	15	±2	≦-28
802.11n@HT40_MCS0	17	±2	≦-10
802.11n@HT40_MCS7	15	±2	≦-28
802.11ac@VHT_40M_MCS0	16	±2	≦-10
802.11ac@VHT_40M_MCS9	14	±2	≦-32
5G Receiver Specifications			
RX Rate	**Min Input Level (Typ. dBm)**	**Max Input Level (Typ. dBm)**	**PER**
802.11a@6Mbps	-90	-5	< 10%
802.11a@54Mbps	-74	-5	< 10%
802.11n@HT20_MCS0	-90	-5	< 10%
802.11n@HT20_MCS7	-71	-5	< 10%
802.11n@HT40_MCS0	-88	-5	< 10%
802.11n@HT40_MCS7	-68	-5	< 10%
802.11ac@VHT_40M_MCS0	-87	-5	< 10%
802.11ac@VHT_40M_MCS9	-62	-5	< 10%

4.3 Bluetooth RF Specification

Conditions: VDD33 =3.3V; Ta:25℃	
Features	**Description**
Bluetooth Specification	Bluetooth Core Specification v5.4/v4.2/v4.0
Frequency Range	2.4~2.4835GHz(2.4GHz ISM Band)
Channels	Blue Low Energy: Ch0~Ch39 (For 2MHz Channels);
Power Classes	Bluetooth Low Energy: Class1.5;

Data Rate & Modulation	LE_125Kbps: GFSK (Coded_S=8); LE_500Kbps: GFSK (Coded_S=2); LE_1Mbps: GFSK (Uncoded); LE_2Mbps: GFSK (Uncoded);

Bluetooth Transmitter Specifications			
Items	**Min (dBm)**	**Typ (dBm)**	**Max (dBm)**
TX Power			
LE_125/500K	3	7	10
LE_1M	3	7	10
LE_2M	3	7	10
LE_1M Modulation Characteristics			
Δf1avg	225KHz	250.7KHz	275KHz
Δf2avg	185KHz	252.9KHz	275KHz
Δf2max	185KHz	245.5KHz	/
Δf2avg/Δf1avg	0.8	0.98	/
LE_2M Modulation Characteristics			
Δf1avg	450KHz	494KHz	550KHz
Δf2avg	370KHz	504KHz	550KHz
Δf2max	370KHz	529KHz	/
Δf2avg/Δf1avg	0.8	1.1	/

Bluetooth Receiver Specifications				
Items	**Sensitivity**		**Maximum Input Level**	
	Input Level (Typ. dBm)	**PER**	**Input Level (Typ. dBm)**	**PER**
LE_125/500K	-90	≦5%	-5	≦5%
LE_1M	-88	≦5%	-5	≦5%
LE_2M	-84	≦5%	-5	≦5%

5. Mechanical Specifications

5.1 Module Outline Drawing（units:mm）

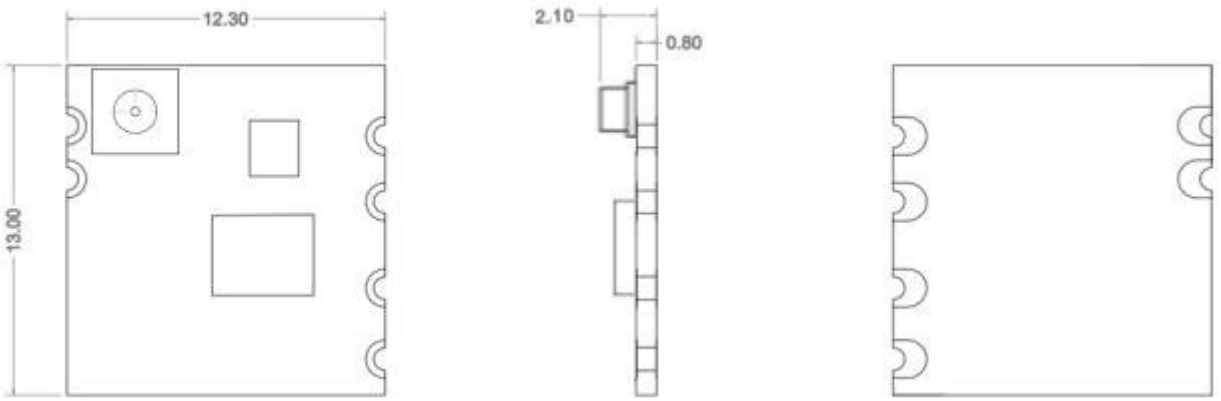

(Top View) (Side View) (Bottom View)

Module dimension: 13.0*12.3*2.1mm (L*W*H; Tolerance: ±0.3mm_L/W, ±0.2mm_H)
IPEX-1 / MHF-1 connector dimension: 2.6*3.0*1.2mm (L*W*H, Ø2.0mm)

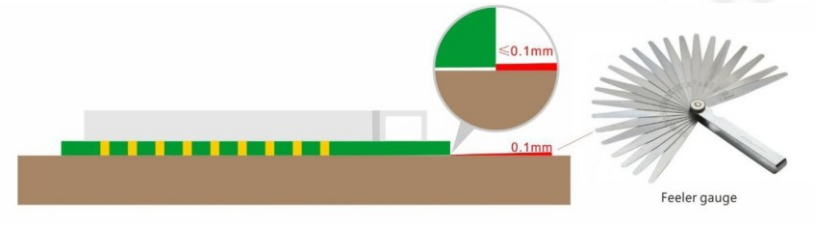

Module Bow and Twist：≤0.1mm

5.2 Mechanical Dimensions（units:mm）

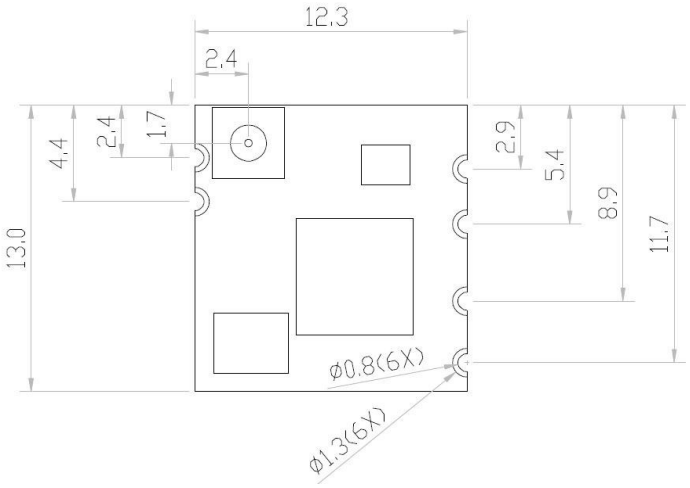

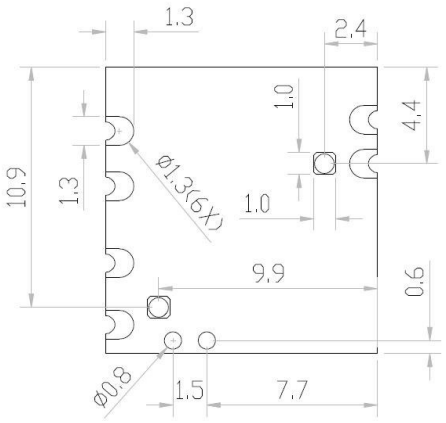

(Top View) (Bottom View)

6. Application Information

6.1 Typical Application Circuit

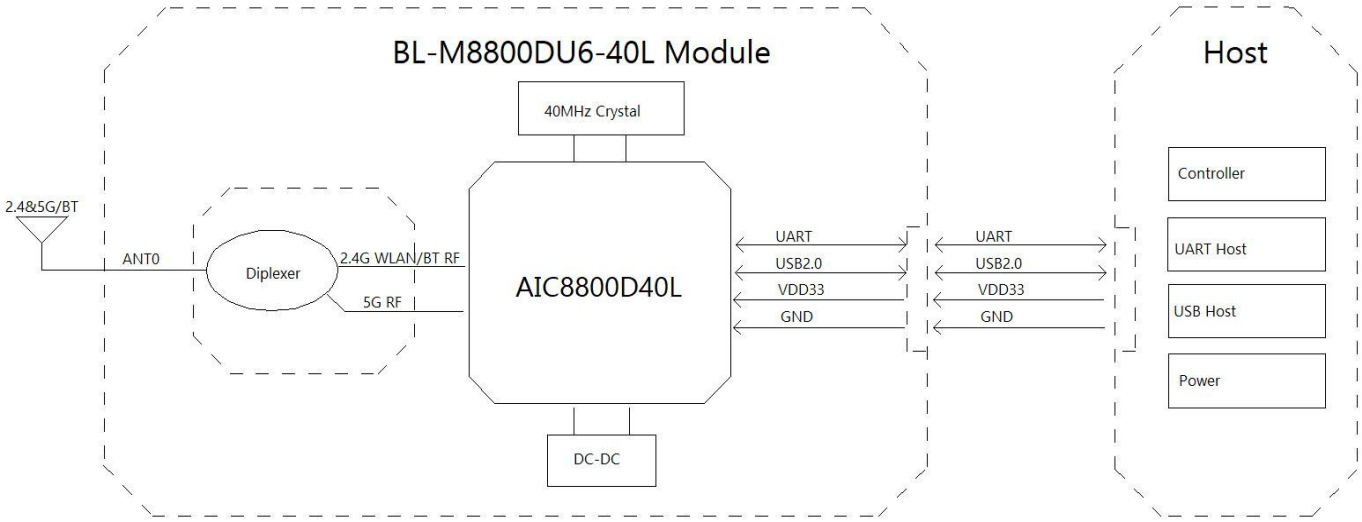

6.2 HW Application Note

6.2.1 VDD33 Power requirement:

A、DC 3.1~3.5V & Ripple Voltage <100mV power supply input, Maximum RMS current≥500mA and Maximum Peak current≥700mA.

B、For achieve fast transient response，a current mode buck converter recommended.

C、On customer's motherboard, use 10uF and 100nF MLCC capacitors close to the module's VDD33 Pin for power input decoupling. Each GND Pin has three close vias to ensure connectivity and thermal conductivity.

6.2.2 USB interface Design Guidelines:

A、The module provides a USB device interface which is compatible with USB2.0 specification, High-Speed mode supports data transmission rate up to 480Mbps.

B、On customer's motherboard, PCB traces of the USB high-speed signal pair should be maintain 90 Ω differential impedance, structure of "Differential Coated Coplanar Waveguide With Ground" with the advantages of impedance control and GND surrounding isolation interference may be an ideal choice. To avoid interference, USB signal pair must be far away from power, RF and other signals, GND copper can be used to surround and isolate them.

C、PCB traces of the USB high-speed signal pair as short as possible, as far away from other signal as possible, minimize the length mismatch of signal pair, avoid layer change and maintain a complete reference layer to reduces signal reflections and impedance changes.

D、If It is necessary to change layers for USB signal pair routing, use GND vias close to signal pair's vias as the shortest return path.

6.3 Recommend PCB Layout Footprint(units:mm)

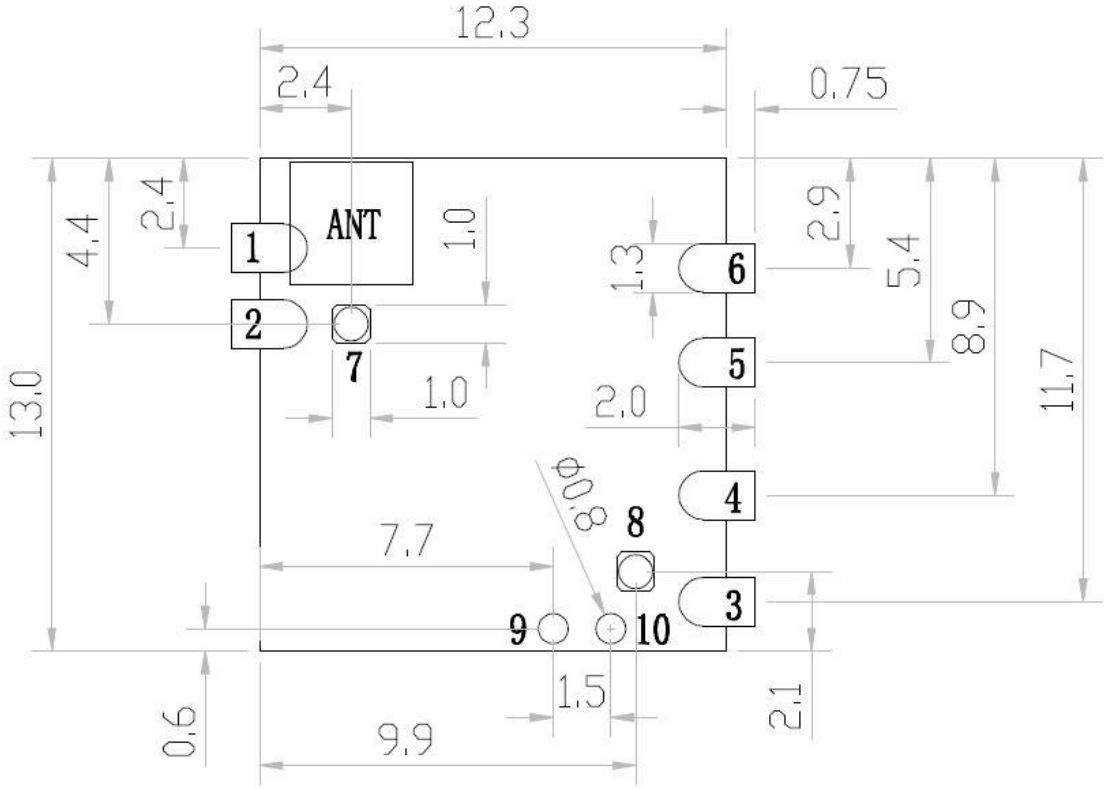

(Design Unit: mm)

6.4 Reflow Soldering Standard Conditions

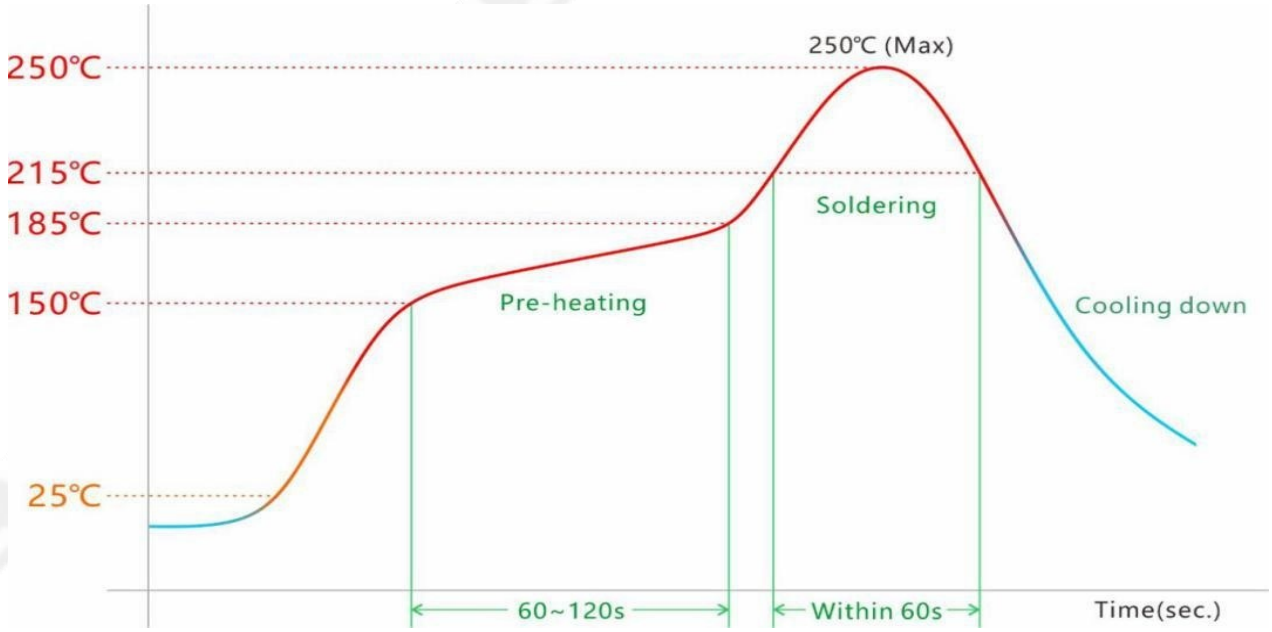

Please use the reflow within 2 times.

Set up the highest temperature within 250℃.

7. Key Components Of Module

No.	Parts	Specification	Manufacturer	Note
1	Chipset	AIC8800D40L	AIC Semiconductor (Shanghai) CO.,LTD	
2	PCB	BL-M8800DU6	SHEN ZHEN QILI ELECTRON CO.,LTD	
			Quzhou Sunlord Electronics Co.,Ltd	
			ShenZhen Tie Fa Technology Limited	
3	Crystal	40MHz-3225	LUCKI CM ELECTRONICS CO.,LTD	
			Chengde oscillator Electronic Technology CO.,LTD	
			JinHua East Crystal Electronic CO.,LTD	
			HUBEI TKD CRYSTAL ELECTRONIC SCIENCE AND TECHNOLOGY CO.,LTD	
4	Diplexer	DIP1608	Shenzhen Sunlord Electronics Co.,Ltd	
			Dongguan Hekang Electronics Co.,LTD	
			Shenzhen FTR Technologies CO., LTD	
			Walsin Technology Corporation	

8. Package and Storage Information

8.1 Package Dimensions

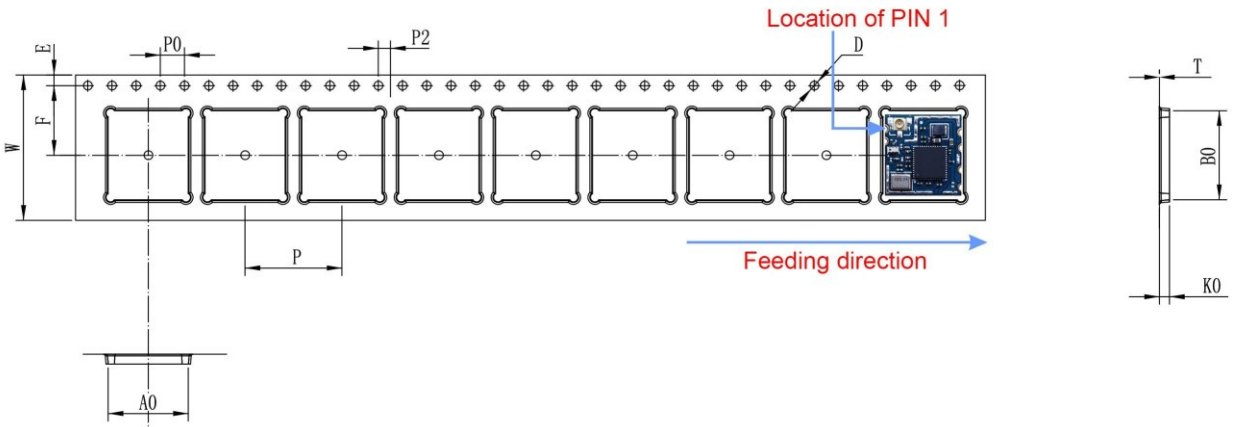

ITEM	W	A0	B0	K0	E	F	P	P0	P2	D	T
DIM	24.00+0.3	12.70±0.1	13.60±0.1	2.50±0.1	1.75±0.1	11.5±0.1	20.00±0.1	4.00±0.1	2.00±0.1	Ø1.5±0.1	0.30±0.05

Package specification:

1. 1,000 modules per roll and 5,000 modules per box.
2. Outer box size: 37.5*36*29cm.
3. The diameter of the blue environment-friendly rubber plate is 13 inches, with a total thickness of 28mm (with a width of 24mm carrying belt).
4. Put 1 package of dry agent (20g) and 1 humidity card in each anti-static vacuum bag.
5. Each carton is packed with 5 boxes.

8.2 Storage Conditions

Absolute Maximum Ratings:

Storage temperature: -40℃ to +85℃
Storage humidity: 10% to 95% RH (Non-Condensing)

Recommended Storage Conditions:

Storage temperature: 5℃ to +40℃
Storage humidity: 20% to 90% RH

Please use this Module within 12month after vacuum-packaged.

The Module shall be stored without opening the packing.
After the packing opened, the Module shall be used within 72hours.
When the color of the humidity indicator in the packing changed,
the Module shall be baked before soldering.
Baking condition: 60℃, 24hours, 1time.

ESD Sensitivity:

ESD Protection: 2KV(HBM, Maximum rating)
The Module is a static-sensitive electronic device.
Do not operate or store near strong electrostatic fields.
Take proper ESD precautions!

ESD CAUTION

Caution: The user is cautioned that changes or modifications not expressly approved by the party responsible for compliance could void the user's authority to operate the equipment.

This device complies with Part 15 of the FCC Rules. Operation is subject to the following two conditions: (1) this device may not cause harmful interference, and (2) this device must accept any interference received, including interference that may cause undesired operation.

NOTE: This equipment has been tested and found to comply with the limits for a Class B digital device, pursuant to Part 15 of the FCC Rules. These limits are designed to provide reasonable protection against harmful interference in a residential installation. This equipment generates, uses and can radiate radio frequency energy and, if not installed and used in accordance with the instructions, may cause harmful interference to radio communications. However, there is no guarantee that interference will not occur in a particular installation.
If this equipment does cause harmful interference to radio or television reception, which can be determined by turning the equipment off and on, the user is encouraged to try to correct the interference by one or more of the following measures:
-- Reorient or relocate the receiving antenna.
-- Increase the separation between the equipment and receiver.
-- Connect the equipment into an outlet on a circuit different from that to which the receiver is connected.
-- Consult the dealer or an experienced radio/TV technician for help.

FCC Radiation Exposure Statement:
This equipment complies with FCC radiation exposure limits set forth for an uncontrolled environment. This transmitter must not be co-located or operating in conjunction with any other antenna or transmitter.
This equipment should be installed and operated with a minimum distance of 20cm between the radiator and your body.

The module in this product is labeled with its own FCC ID. The FCC ID is not visible when the module is installed inside another device. Therefore, the outside of the device into which the module is installed must also display a label referring to the module. The final end device must be labeled in a visible area with the following
"Contains FCC ID: 2ANCG-M8800DU6"

The user manual for LE-LAN devices shall contain instructions related to the restrictions mentioned in the above sections, namely that:
i. the device for operation in the band 5150–5250 MHz is only for indoor use to reduce the potential for harmful interference to co-channel mobile satellite systems;
ii. for devices with detachable antenna(s), the maximum antenna gain permitted for devices in the bands 5250-5350 MHz and 5470-5725 MHz shall be such that the equipment still complies with the e.i.r.p. limit;
iii. for devices with detachable antenna(s), the maximum antenna gain permitted for devices in the band 5725-5850

MHz shall be such that the equipment still complies with the e.i.r.p. limits as appropriate; and
iv. where applicable, antenna type(s), antenna models(s), and worst-case tilt angle(s) necessary to remain compliant with the e.i.r.p. elevation mask requirement set forth in section 6.2.2.3 shall be clearly indicated.
This equipment should be installed and operated with a minimum distance of 20cm between the radiator and your body.
Cet équipement doit être installé et utilisé à une distance minimum de 20 cm entre l' antenne et votre corps.