KTX2.0300
MAN
Operation and Installation Manual

Doc.-No.:	**KTX2.A-MAN**
Issue:	**0202**
ECR-No.:	**KTX2.A-ECR.0202**
Date:	**2019-04-17**
MoC:	**0**

Document Release

Function	Name	Date	Signature
Prepared by	Uwe Mathes	2019-04-17	i.V.
Checked by	Florian Holzner	2019-04-17	i.V.
Approved by	Thomas Eilers	2019-04-17	i.V.

© TQ-Systems GmbH. All information contained in this documents have to be treated strictly confidential. The transfer of presentations and know-how to third parties requires the prior written consent of TQ-Systems GmbH.

KTX2

Mode-S Transponder

Standard

KTX2-S (Standard) with ADS-B with Part-No 304110

Operation and Installation Manual

© TQ-Systems GmbH. All information contained in this documents have to be treated strictly confidential. The transfer of presentations and know-how to third parties requires the prior written consent of TQ-Systems GmbH.

Revision List

Revision	Date	Topic
0100	24.03.2017	Initial Release
0101	20.02.2018	Amendments for extended Squitter and maintenance
0201	10.04.2019	Change due to new microcontroller and new functionalities according to EUROCAE ED-102A / RTCA DO-260B
0202	17.04.2019	Amendment of Software License Clearing and added Cap. 10

Service Bulletins (SB)

Service Bulletins must be inserted in the manual and added to this table.

No SB	No Rev.	Release date	Date Added	Name

© TQ-Systems GmbH. All information contained in this documents have to be treated strictly confidential. The transfer of presentations and know-how to third parties requires the prior written consent of TQ-Systems GmbH.

Change History

Product Revision	Date	Description of Change
0300	09.04.2019	Base version for KTX2-S (Standard) with ADS-B with Part-No 304110

© TQ-Systems GmbH. All information contained in this documents have to be treated strictly confidential. The transfer of presentations and know-how to third parties requires the prior written consent of TQ-Systems GmbH.

Table of Contents

1. General ... 7
1.1. Symbols ... 7
1.2. Abbreviations ... 8
1.3. Customer Support ... 9
1.4. Features ... 10
2. Operation ... 11
2.1. Controls and Display on the Screen ... 11
2.1.1. Controls ... 12
2.1.2. Indications ... 13
2.1.3. Operation menu structure ... 14
2.1.4. ON/OFF ... 15
2.1.5. Adjusting the Squawk ... 16
2.1.6. Transponder-Modes ... 17
2.1.7. VFR – Squawk ... 17
2.1.8. Squawk Ident (ID, SPI) ... 18
2.1.9. Flight/Ground Indication ... 18
2.2. Adjustable parameters in operation mode ... 19
2.2.1. Flight ID ... 19
2.2.2. Flight ID ... 19
2.2.3. GNSS Data ... 20
2.2.4. Extended Squitter ... 21
3. Set-Up ... 22
3.1. Entering Set Up ... 24
3.1.1. Display brightness ... 24
3.1.2. Set Flight-IDentifier (FID) ... 25
3.1.2.1. Multiple Flight ID's and Aircraft addresses ... 26
3.1.3. Aircraft Address (AA) ... 27
3.1.4. Device Parameter ... 28
3.1.4.1. Aircraft Category ... 29
3.1.4.2. Ground Switch ... 30
3.1.4.3. Speed Category ... 30
3.1.4.4. Select GNSS Device ... 31
3.1.4.5. Select Length/Width ... 32
3.1.4.6. GNSS Antenna Offset ... 32
3.1.5. Modify VFR ... 33
3.1.6. Factory Reset ... 34
3.1.7. Test Menu ... 34
3.1.7.1. Altitude offset ... 35
3.1.7.2. Test Mode ... 35
3.1.7.3. Device Info ... 35
4. Errors and Warnings ... 36
4.1. Setup Error ... 36
4.2. Critical Errors ... 36
4.2.1. Error FPGA ... 37
4.2.2. Internal Communication failure ... 37
4.2.3. Do System Restart ... 37
4.3. General Failure ... 37
4.3.1. CRC Failure ... 37
4.4. Warnings ... 38

© TQ-Systems GmbH. All information contained in this documents have to be treated strictly confidential. The transfer of presentations and know-how to third parties requires the prior written consent of TQ-Systems GmbH.

4.4.1. Battery Warning ... 38
4.4.2. Antenna Warning ... 38
4.4.3. TRX Warning ... 39
5. Installation ... 40
5.1. Equipment Connections ... 40
5.1.1. Electrical Connections ... 40
5.1.2. Mutual Suppression ... 40
5.1.3. Ground Switch ... 40
5.1.4. Static Air Port ... 40
5.1.5. Interface ... 41
5.2. Wiring ... 42
5.2.1. Conductor Cross Section ... 42
5.2.2. Wiring Scheme ... 42
6. Drawings ... 43
7. Technical Data ... 44
7.1. General ... 44
7.2. Transmitter - Receiver ... 45
8. FCC related issues ... 46
8.1. Radiofrequency radiation exposure Information: ... 46
8.2. Notice ... 46
8.3. Compliance ... 46
8.4. Modifications ... 46
9. Maintenance ... 47
9.1. Periodic Maintenance ... 47
9.2. Repair ... 47
9.3. Cleaning ... 47
10. Software License Conformity ... 48

List of Figures

Figure 1: Display Diagram ... 11
Figure 2: Controls ... 12
Figure 3: Indicators ... 13
Figure 4: Operational menu structure ... 14
Figure 5: Extended Squitter ... 21
Figure 6: Button functions in setup-mode ... 22
Figure 7: Setup menu structure ... 23
Figure 8: Wiring ... 42
Figure 9: Dimensions of KTX2-S Standard round format ... 43
Figure 10: Technical Data ... 44
Figure 11: Transmitter receiver ... 45

© TQ-Systems GmbH. All information contained in this documents have to be treated strictly confidential. The transfer of presentations and know-how to third parties requires the prior written consent of TQ-Systems GmbH.

1. General

This manual contains information about the physical, mechanical and electrical characteristics, installation and operation of the Mode S Transponder KTX2.

1.1. Symbols

	DANGER: Advices whose non-observance can cause radiation damage to the human body or ignition of combustible materials.

	ATTENTION: Advices whose non-observance can cause damage to the device or other parts of the equipment. or reduce the correct functionality of the device.

	INFORMATION

© TQ-Systems GmbH. All information contained in this documents have to be treated strictly confidential. The transfer of presentations and know-how to third parties requires the prior written consent of TQ-Systems GmbH.

1.2. Abbreviations

Abb.	Meaning	Explanation
FID	Flight ID	Flightplan Number or if not assigned Registration Number of aircraft
SPI	Special Position Identification (ID)	Activation on request by controllers „Squawk Ident“, transmits SPI Pulse for 18 seconds, which highlights the respective traffic item on the controllers radar screen
AA	Aircraft Address	Assigned ICAO 24 bit address
AC	Aircraft Category	Defines aircraft type into specific categories
RI	Reply Information	Classified air speed
ADS-B	Automatic Dependent Surveillance Broadcast	-

© TQ-Systems GmbH. All information contained in this documents have to be treated strictly confidential. The transfer of presentations and know-how to third parties requires the prior written consent of TQ-Systems GmbH.

1.3. Customer Support

In order to facilitate a rapid handling of returned shipments, please send your request at the email address below. Additional information and FAX number can be found on the TQ Avionics web portal:

www.tq-avionics.com

	Any suggestions for improvement of our manuals are welcome. Contact: info@tq-avionics.com

	Information on software updates are available at TQ. www.tq-avionics.com

© TQ-Systems GmbH. All information contained in this documents have to be treated strictly confidential. The transfer of presentations and know-how to third parties requires the prior written consent of TQ-Systems GmbH.

1.4. Features

	In order to operate the Mode-S transponder it is necessary to request (in time) an ICAO 24-Bit Aircraft Address at the responsible National Aviation Authorities. The received code must be configured within the transponder (see chapter. 3.1.2 “Flight-ID (FID) & Set-Up”).

- Class 1 Level 2els Non-Diversity Mode-S-Transponder for ground based interrogations at 1030 MHz and response at 1090 MHz
- Replies to Secondary Radar Interrogations
    - Mode-A replies with a Squawk (one of 4096 possible Codes; e.g. flight plan number, Squawk assigned by a Controller or the VFR Squawk).
    - Mode C replies, including Encoded Flight Level.
    - Mode S replies, including Aircraft Address and Flight Level.
    - Event Squitter, containing Identification Information.
    - Extended Squitter, including position data.
- IDENT capability for activating the Special Position Identification“- Pulse (SPI) for 18 seconds, which is requested by the Controller „Squawk Ident“
- Maximum flight level 30 000ft; maximum airspeed 250kt
- Display information contains Squawk code, mode of operation and pressure altitude.
- Temperature compensated high precision piezo-resistive pressure sensor
- RS-232 data port enabling connection with mutual suppression and On the Ground (weight on wheels) inputs. In addition, an appropriate GPS receiver for “extended squitter” can be connected.
- 8 storable entries for AA-/AC-Code, FID,
- Ground-Switch support, RI-Code.

© TQ-Systems GmbH. All information contained in this documents have to be treated strictly confidential. The transfer of presentations and know-how to third parties requires the prior written consent of TQ-Systems GmbH.

2. Operation

2.1. Controls and Display on the Screen

Figure 1: Display Diagram

© TQ-Systems GmbH. All information contained in this documents have to be treated strictly confidential. The transfer of presentations and know-how to third parties requires the prior written consent of TQ-Systems GmbH.

2.1.1. Controls

Key	Designation	Function
	ON/OFF	Push = ON. This switch is mechanically locked until it is pushed a second time.
	VFR	Activate/deactivate VFR Squawk (press shortly) Store the standby Squawk as VFR/VFRW-Squawk (press button 3 s) see chapter “2.6 VFR – Squawk”.
	CHANGE	1. Exchange of the active and standby-Squawk 2. Works as cursor back button when entering values and also for navigating backwards through the configuration menu.
	IDENT	„Squawk Ident“, sends Ident marking (SPI) for 18s (in normal mode) see chapter. “2.9 Flight- ID (FID) & Set-Up”
	MODE	Select Transponder-Mode ACS, A-S or Standby (see chapter “2.4 Transponder-Modes”)
	Rotary knob	1. Enter values at current cursor position, select options; set standby Squawk 2. Works as cursor forward button when entering values and also for navigating forward through the configuration menu.

Figure 2: Controls

© TQ-Systems GmbH. All information contained in this documents have to be treated strictly confidential. The transfer of presentations and know-how to third parties requires the prior written consent of TQ-Systems GmbH.

2.1.2. Indications

Indication	Meaning	Remark
	Transponder is transmitting Mode-A/C Replies on Interrogations	Appears per reply
	Transponder is transmitting Mode-S Replies on Interrogations	Appears per reply
	Transponder is locked by a ground station and will be directly addressed	Appears at every addressed reply
	Extended Squitter	Status of Extended Squitter transmission
	Active Squawk	
	Battery power too low	Blinking
	Transmits IDENT- Marking	ID („Squawk Ident“) has been pressed – active for 18s
	Flight Level	Flight Level (in 100ft steps)
	Mode display (STBY, ON, GND, ALT)	see chapter. 2.1.6 Transponder-Modes
	Standby-Squawk	Can be changed with active Squawk by pushing the UP/DOWN (toggle) button

Figure 3: Indicators

© TQ-Systems GmbH. All information contained in this documents have to be treated strictly confidential. The transfer of presentations and know-how to third parties requires the prior written consent of TQ-Systems GmbH.

2.1.3. Operation menu structure

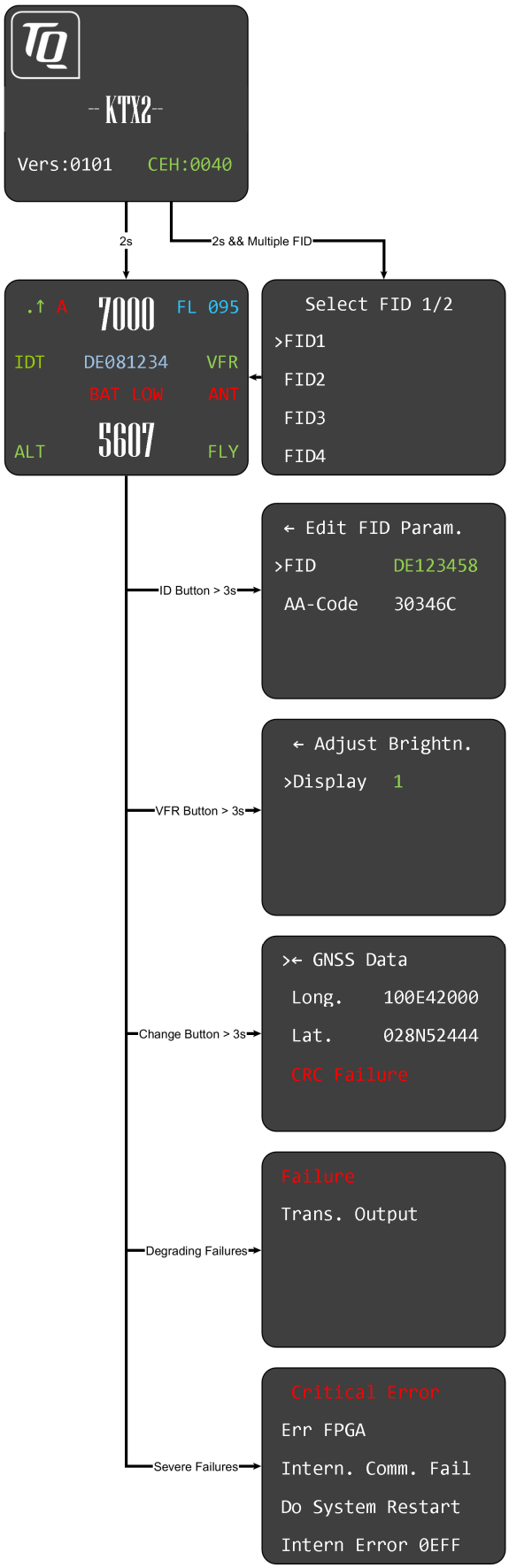

Figure 4: Operational menu structure

© TQ-Systems GmbH. All information contained in this documents have to be treated strictly confidential. The transfer of presentations and know-how to third parties requires the prior written consent of TQ-Systems GmbH.

2.1.4. ON/OFF

The device is switched on/off by pushing the mechanically locked key. After power up, the display appears as follows (example):

Device Name

-- KTX2 --

Software-Version
e.g. V.0101

Firmware-Version
e.g. FPGA: 6.0

After approx. 2 seconds the normal operation window appears and the transponder will enter the mode ALT. If a weight on wheels switch is installed and the aircraft is on ground the mode GND will be set.

No GND switch installed

GND-switch installed, on GND

© TQ-Systems GmbH. All information contained in this documents have to be treated strictly confidential. The transfer of presentations and know-how to third parties requires the prior written consent of TQ-Systems GmbH.

In case that multiple Flight ID's are present, the screen will first display the selection menu for one of the Flight ID's:

```
← Flight ID:1/2
>CallSign1
 CallSign2
 CallSign3
 CallSign4
```

Select the correct Flight ID by rotating the rotary knob to the one you chose and confirm by pushing. The screen will switch automatically to the normal operation window.

2.1.5. Adjusting the Squawk

When pushing the rotating knob in the normal operating mode, the first number of the stand-by squawk turns green, and can be adjusted by rotating the rotary knob. Pushing the rotary knob will save the selected number and jump to the next digit which also will turn green during adjustment.

Continue with the remaining numbers in this way until the desired squawk is set.

With the toggle button you can turn the stand-by squawk into the active squawk.
The active squawk is always on the top line.

© TQ-Systems GmbH. All information contained in this documents have to be treated strictly confidential. The transfer of presentations and know-how to third parties requires the prior written consent of TQ-Systems GmbH.

2.1.6. Transponder-Modes

The active mode is displayed at the bottom left corner.

STBY	Transponder is on but does not respond to any interrogation.
GND	Transponder responds to Mode-S interrogations.
ON	Transponder responds to all interrogations, only altitude is not transmitted.
ALT	Transponder responds to all interrogations.

During the flight the Mode ALT should always be set, unless the air traffic control gives other instructions.

While rolling on the ground the transponder should be set to GND, unless the installation includes a weight on wheels switch. In this case, the mode changes automatically.

The Mode-selection is done by (repeatedly) pushing the MDE button.

To enable or disable the Extended Squitter, press the MDE button for more than 3 seconds.

2.1.7. VFR – Squawk

The factory setting of the VFR transponder code is 7000. The VFR transponder code however can be defined in accordance with local requirements, see setup menu chapter 3.1.5.

To activate the VFR-Squawk push the VFR button. VFR is then indicated on the display as the active squawk.

© TQ-Systems GmbH. All information contained in this documents have to be treated strictly confidential. The transfer of presentations and know-how to third parties requires the prior written consent of TQ-Systems GmbH.

2.1.8. Squawk Ident (ID, SPI)

On request of the air traffic control, push the ID button (when not in the STBY mode).

Transmission of the ID signal will last for 18 seconds and “IDT” is displayed above the mode and left side of the Flight ID.

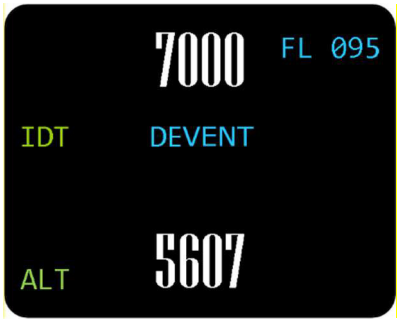

2.1.9. Flight/Ground Indication

Aircrafts with AIR/GROUND switches display “FLY” (Flight) or “GND” (Ground) in the lower right corner.

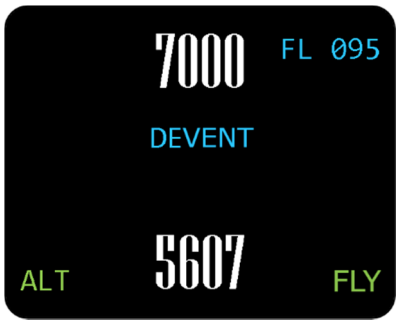

This function must be activated in the set-up procedure (see chap. 3.1.4.2).

When this function is not activated, there are no indications on the display and modes must be manually selected in accordance with chapter 2.1.6.

© TQ-Systems GmbH. All information contained in this documents have to be treated strictly confidential. The transfer of presentations and know-how to third parties requires the prior written consent of TQ-Systems GmbH.

2.2. Adjustable parameters in operation mode

2.2.1. Flight ID

To modify the Flight ID during operation, push the ID button for at least 3 seconds.

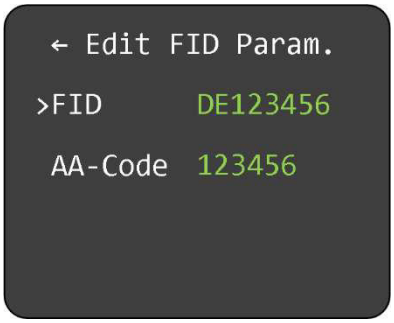

The parameters can be adjusted in the same way like described in chapter 3.1.2.

2.2.2. Flight ID

To modify the display brightness during operation, push the VFR button for at least 3 seconds.

The menu appears, brightness can be adjusted by turning and pushing the rotary knob in the same way as described in setup menu (see chap. 2.1.1).

© TQ-Systems GmbH. All information contained in this documents have to be treated strictly confidential. The transfer of presentations and know-how to third parties requires the prior written consent of TQ-Systems GmbH.

2.2.3. GNSS Data

The actual GNSS data can be displayed when pushing the toggle button for at least 3 seconds:

```
>← GNSS Data
 Long.    100E42000
 Lat.     028N52444
```


© TQ-Systems GmbH. All information contained in this documents have to be treated strictly confidential. The transfer of presentations and know-how to third parties requires the prior written consent of TQ-Systems GmbH.

2.2.4. Extended Squitter

The Symbols for Extended Squitter show the current operational status of ES transmission:

Indication	Function	Description
	Extended Squitter on. Letter “A” appears white	ADS-B out function is active and transmitting messages
	Extended Squitter on. Letter “A” appears yellow	ADS-B out function is active but not transmitting messages
	Extended Squitter on Letter “A” appears red	ADS-B out function is active and transmitting type ZERO position messages or no position messages due to missing position data (longitude, altitude, latitude)
	Extended Squitter off Letter “A” disappears	No transmitting data

Figure 5: Extended Squitter

© TQ-Systems GmbH. All information contained in this documents have to be treated strictly confidential. The transfer of presentations and know-how to third parties requires the prior written consent of TQ-Systems GmbH.

3. Set-Up

Figure 6: Button functions in setup-mode

© TQ-Systems GmbH. All information contained in this documents have to be treated strictly confidential. The transfer of presentations and know-how to third parties requires the prior written consent of TQ-Systems GmbH.

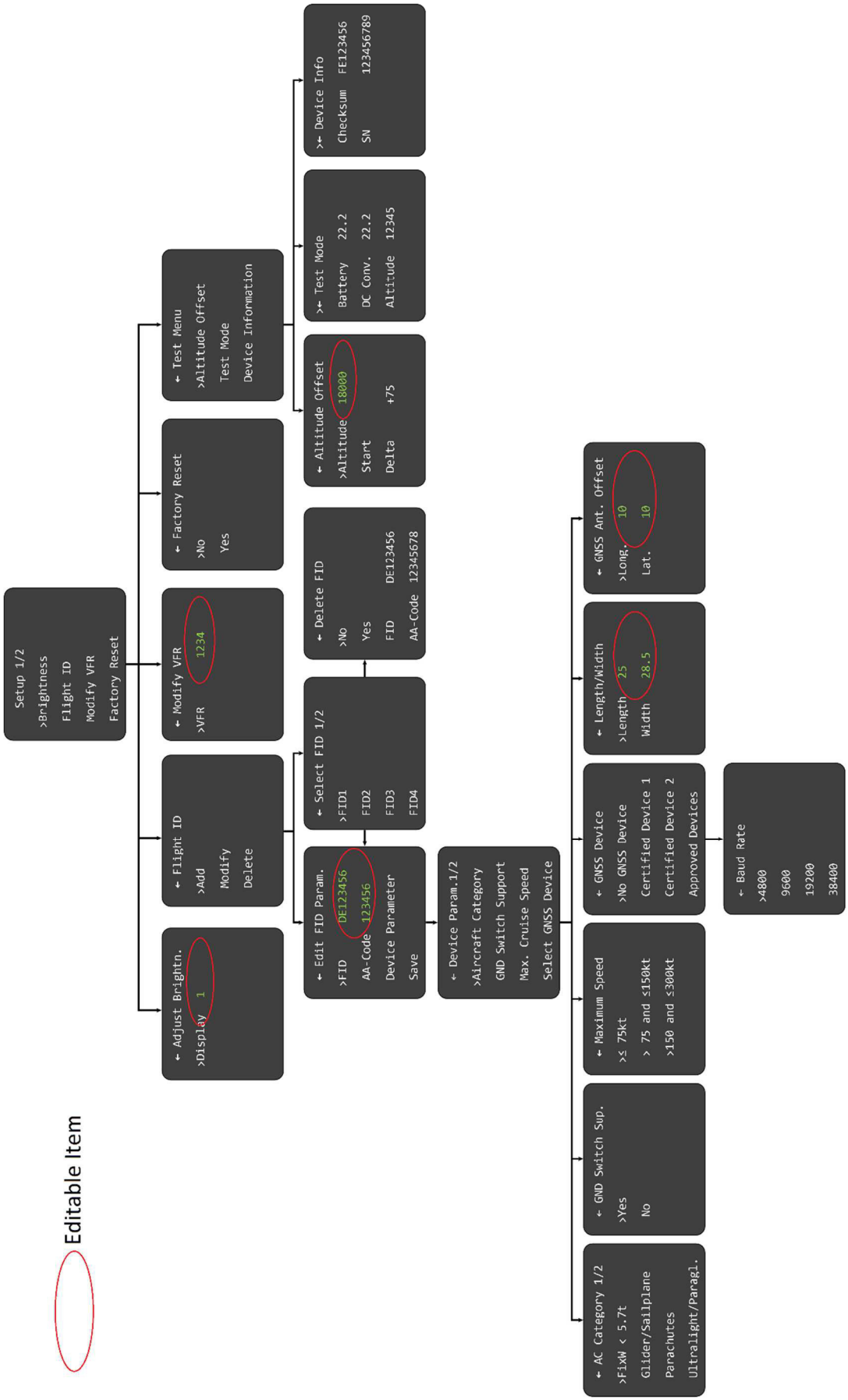

Figure 7: Setup menu structure

© TQ-Systems GmbH. All information contained in this documents have to be treated strictly confidential. The transfer of presentations and know-how to third parties requires the prior written consent of TQ-Systems GmbH.

3.1. Entering Set Up

To enter setup mode, press ID button during system startup.

The following menu appears:

```
   Setup 1/2
>Brightness
 Flight ID
 Modify VFR
 Factory Reset
```

```
   Setup 2/2
>Test Menu
```

Rotation of the rotary knob moves to the desired menu item.
Pushing the rotary knob selects the desired parameter to be modified.

3.1.1. Display brightness

Push the rotary knob to enter brightness sub menu.
Turning the rotary knob changes the value for brightness between 1 (lowest) to 5 (highest).
When selection is done, turn rotary knob to move cursor to “Adjust Brightness.” and leave menu by pushing the rotary knob.

```
   Setup 1/2
>Brightness
 Flight ID
 Modify VFR
 Factory Reset
```

```
← Adjust Brightn.
>Display   1
```


© TQ-Systems GmbH. All information contained in this documents have to be treated strictly confidential. The transfer of presentations and know-how to third parties requires the prior written consent of TQ-Systems GmbH.

3.1.2. Set Flight-IDentifier (FID)

Rotate the rotary knob to select Flight ID.

```
   Setup 1/2
 Brightness
>Flight ID
 Modify VFR
 Factory Reset
```

Push the rotary knob to enter Flight ID sub menu.

```
 ← Flight ID
>Add
 Modify
 Delete
```

Select “Add” to add a Flight ID, modify to modify or delete to delete a Flight ID by pushing the rotary knob.

In the “Add” sub menu the following screen appears:

```
 ← Edit FID Param.
>FID      DE123456
 AA-Code  123456
 Device Parameter
 Save
```

Press and rotate the rotary knob to enter the Flight ID. Press to jump to the next digit, rotate to select the desired character until the Flight ID is complete.

When selection is done, turn rotary knob to move cursor to “Save”, save configuration by pushing the rotary knob. Leave the menu entering the first line (“Edit FID Parameter”) and by pushing the rotary knob.

© TQ-Systems GmbH. All information contained in this documents have to be treated strictly confidential. The transfer of presentations and know-how to third parties requires the prior written consent of TQ-Systems GmbH.

ICAO regulations require Mode-S data to contain a valid flight identification (FID), to ensure automatic exchange of flight plan and radar data. Commercial flights usually have their own FIDs. General aviation FIDs should be the registration letters or numbers of the aircraft. The FID must not be confused with the 24-bit Aircraft Address. The FID is left aligned and shown in green characters. The FID may not contain blanks however the non-used most right characters must be blank. The FID must start with the nationality code.

	Enter FID left-aligned, without any blanks or dashes (!), e.g. DENWS for the marking D-ENWS. The last remaining digits shall be filled with blanks.

	FID containing blanks characters are invalid. Missing FID disables mode-S operation and A/C-mode only will be engaged. See chapter “4 Self-Test, Errors and Warnings”

3.1.2.1. Multiple Flight ID’s and Aircraft addresses

In case, the KTX2 transponder is used for multiple aircraft (e.g. in a portable station as used in hot-air/gas filled balloons), up to eight FID’s can be stored in the KTX2 memory.
To every Flight ID, of course the appropriate Aircraft Address must be assigned in the same way than for the use of one FID only.

In case multiple FID’s are stored in the memory, the KTX2 will prompt you to select one of the stored FIDs each time it is turned on, before it goes into normal operating mode:

```
   Select FID
>FID 1
 FID 2
```

Further Flight ID’s are to be stored in the same way, like under chapter 3.1.2

If all eight possible ID’s have been stored, the following message appears:

© TQ-Systems GmbH. All information contained in this documents have to be treated strictly confidential. The transfer of presentations and know-how to third parties requires the prior written consent of TQ-Systems GmbH.

```
Notification
Limit FID reached
```

3.1.3. Aircraft Address (AA)

Note:
Before you can enter the Aircraft Address, the Flight ID needs to be defined.

Rotate the rotary knob to select Flight ID.

```
  Setup 1/2
 Brightness
>Flight ID
 Modify VFR
 Factory Reset
```

Push the rotary knob to enter Flight ID sub menu.

```
 ← Flight ID
>Add
 Modify
 Delete
```

Select “Add” by pushing the rotary knob.

© TQ-Systems GmbH. All information contained in this documents have to be treated strictly confidential. The transfer of presentations and know-how to third parties requires the prior written consent of TQ-Systems GmbH.

In the “Add” sub menu the following screen appears:

```
 ← Edit FID Param.
 FID      DE123456
>AA-Code  123456
 Device Parameter
 Save
```

Rotate the rotary knob to enter the AA-Code submenu. Press to jump to the next digit, rotate to select the desired character until the Aircraft Address is complete.

When code is complete, turn rotary knob to move cursor to “Save”, save configuration by pushing the rotary knob. Leave the menu entering the first line (“Edit FID Param.”) and by pushing the rotary knob.

3.1.4. Device Parameter

The submenu "Device Parameter" can also be accessed via the submenu "Flight ID":

Rotate the rotary knob to select Flight ID.

```
   Setup 1/2
 Brightness
>Flight ID
 Modify VFR
 Factory Reset
```

Push the rotary knob to enter Flight ID sub menu.

```
 ← Flight ID
>Add
 Modify
 Delete
```

Select “Add” by pushing the rotary knob.

© TQ-Systems GmbH. All information contained in this documents have to be treated strictly confidential. The transfer of presentations and know-how to third parties requires the prior written consent of TQ-Systems GmbH.

In the “Add” sub menu the following screen appears:

```
← Edit FID Param.
FID       DE123456
AA-Code   123456
>Device Parameter
Save
```

Rotate the rotary knob and push to enter the Device Parameter Submenu.

The following screen appears:

```
← Device Param.1/2
>Aircraft Category
GND Switch Support
Max. Cruise Speed
Select GNSS Device
```

Page 1

```
Device Param.2/2
>Length/Width
GNSS Ant. Offset
```

Page 2

3.1.4.1. Aircraft Category

Push the rotary knob to enter the “Aircraft Category submenu. The following screen appears:

```
← AC Category 1/2
>FixW < 5.7t
Glider/Sailplane
Parachutes
Ultralight/Paragl.
```

Page 1

```
AC Category 2/2
>UAV
Gas Filled
```

Page 2

Make the selection which fits to the category of your aircraft by rotating to the appropriate category. Confirm by pushing the rotary knob. Leave the menu in the usual way.

© TQ-Systems GmbH. All information contained in this documents have to be treated strictly confidential. The transfer of presentations and know-how to third parties requires the prior written consent of TQ-Systems GmbH.

Note:
The KTX2 is not yet certified for A/C FixW>5.7t, speed >250kts and helicopters (RotorCr). Therefore, these items are not yet selectable.

3.1.4.2. Ground Switch

The next submenu is activates / deactivates AIR/GND switch function. YES/NO can be selected by rotating the rotary knob, push to confirm.

```
 ← GND Switch Sup.
>Yes
 No
```

3.1.4.3. Speed Category

In the next submenu you should select the typical cruising speed range of your aircraft.

```
 ← Maximum Speed
>≤ 75kt
 > 75 and ≤150kt
 >150 and ≤300kt
```

Select the appropriate value for your aircraft by rotating the rotary knob and push to confirm. Leave the menu by moving the cursor to the upper line by rotating the rotary knob and push.

© TQ-Systems GmbH. All information contained in this documents have to be treated strictly confidential. The transfer of presentations and know-how to third parties requires the prior written consent of TQ-Systems GmbH.

3.1.4.4. Select GNSS Device

In case the KTX2's extended squitter function is used, an appropriate WAAS GPS source needs to be connected (see chapter 5 wiring).

Note:
In countries and airspace, where ADS-B (out) function is mandatory (e.g. USA) full compliance with those regulations (e.g. FAA 2020 mandate) is granted with the KTX2 in connection with the NexNav Mini WAAS GPS receiver. This normally is the right choice for TC'd aircraft.

Other aircraft voluntarily equipped with ADS-B like experimentals, gliders, ultralights etc. may be equipped with an appropriate low-cost WAAS GPS source. It is encouraged to use only GPS receivers recommended by TQ.

After jump to the "Select GNSS Device", the following screen appears:

```
 ← GNSS Device
>No GNSS Device
 NexNav mini
 Approved Device
```

- If no WAAS GPS is connected, select "No GNSS Device".
- If a NexNav mini is connected, select "NexNav mini"
- "Approved Device" shall be selected, if a recommended WAAS GPS source capable of the GPRMC-sentence (as defined in the NMEA 0183 protocol) which contains the position information as well as velocity, track, date and time is used.

In the "Approved device" menu, there is another submenu, where the appropriate Baud Rate for the GNSS device can be selected:

```
 ← Baud Rate
>4800
 9600
 19200
 38400
```


© TQ-Systems GmbH. All information contained in this documents have to be treated strictly confidential. The transfer of presentations and know-how to third parties requires the prior written consent of TQ-Systems GmbH.

When settings have been done, leave the menu by moving the cursor to the upper line by rotating the rotary knob and push.

3.1.4.5. Select Length/Width

After entering the “length/Width” menu, the following screen appears.

```
 ← Length/Width
>Length   25
 Width    28.5
```

The values to be entered are in meters (rounded) for example:
Aircraft length is 7,5m, the entry shall be 08.
Aircraft width (wingspan) is 9,4m, the entry shall be 09.4

When the correct value has been entered, leave the menu by moving the cursor to the upper line by rotating the rotary knob and push.

3.1.4.6. GNSS Antenna Offset

```
 ← GNSS Ant. Offset
>Long.     10
 Lat.     +10
```

Within the antenna offset menu, the longitudinal and lateral position of the GPS Antenna is to be entered. While mainly important for large aircraft, the values can be entered for small aircraft as well.

© TQ-Systems GmbH. All information contained in this documents have to be treated strictly confidential. The transfer of presentations and know-how to third parties requires the prior written consent of TQ-Systems GmbH.

- Longitudinal offset: Enter the distance in meters of the GPS antenna from the NOSE of the aircraft.
- Lateral offset: Enter the lateral distance of the GPS antenna from the longitudinal (Roll) axis of the aircraft. For most small aircraft “00” is correct. In case an antenna offset is applicable, the position to the left side of the aircraft will require a negative sign, to the right a positive sign.

When the correct value has been entered, leave the menu by moving the cursor to the upper line by rotating the rotary knob and push.

3.1.5. Modify VFR

In setup mode, move to “Modify VFR” by rotating the rotary knob and push to enter the submenu.

```
  Setup 1/2
 Brightness
 Flight ID
>Modify VFR
 Factory Reset
```

The following menu appears:

```
← Modify VFR
>VFR        1234
```

Pushing and rotating the rotary knob selects and modifies the digits.

Note:
Make sure, that you enter the correct VFR Squawk for the particular country where your aircraft is operated.

Examples:
Germany: VFR Squawk = 7000
USA: VFR Squawk = 1200

© TQ-Systems GmbH. All information contained in this documents have to be treated strictly confidential. The transfer of presentations and know-how to third parties requires the prior written consent of TQ-Systems GmbH.

3.1.6. Factory Reset

```
 ← Factory Reset
>No
 Yes
```

In certain cases it may be necessary to perform a factory reset.

If you select “Yes” and confirm by pushing the rotary knob, the system will do a factory reset. You will be prompted to restart the transponder.

3.1.7. Test Menu

```
   Setup 2/2
>Test Menu
```

The Test Menu incorporates the following submenus:

```
 ← Test Menu
>Altitude Offset
 Test Mode
 Device Information
```


© TQ-Systems GmbH. All information contained in this documents have to be treated strictly confidential. The transfer of presentations and know-how to third parties requires the prior written consent of TQ-Systems GmbH.

3.1.7.1. Altitude offset

```
 ← Altitude Offset
>Altitude   18000
 Start
 Delta      +75
```

3.1.7.2. Test Mode

The Test Mode displays three parameters:

- Operating voltage (Battery)
- DC Converter voltage
- Altitude (in feet)

```
>← Test Mode
 Battery    22.2
 DC Conv.   22.2
 Altitude   12345
```

3.1.7.3. Device Info

The submenu “Device Info” displays the checksum of the software / firmware and the serial number of the device.

```
>← Device Info
 Checksum   FE123456
 SN         123456789
```


© TQ-Systems GmbH. All information contained in this documents have to be treated strictly confidential. The transfer of presentations and know-how to third parties requires the prior written consent of TQ-Systems GmbH.

4. Errors and Warnings

The KTX2 distinguishes 3 types of anomalies:

- Warnings
- Setup Errors
- Elementary Function Errors

4.1. Setup Error

If no FID-Code (Flight ID) and the corresponding Aircraft Address (AA-Code) is entered or uncomplete, the following displays will appear after switching on the transponder:

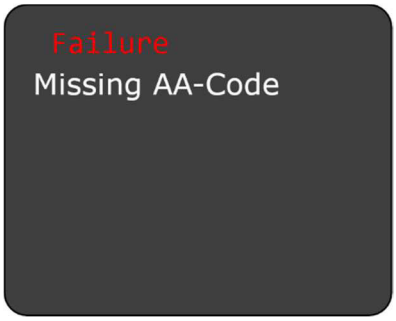

Enter appropriate FID and AA-Code in accordance with chapters 3.1.2 and 3.1.3.

Note:
As long no FID / AA is set, the transponder will operate in A/C mode only.

4.2. Critical Errors

In case a critical error is present, the following messages can appear:

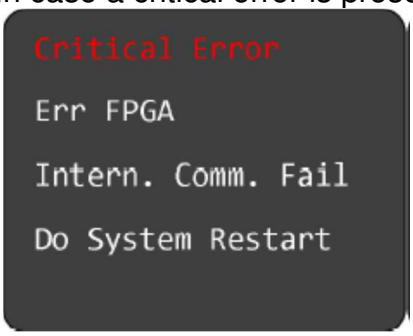

© TQ-Systems GmbH. All information contained in this documents have to be treated strictly confidential. The transfer of presentations and know-how to third parties requires the prior written consent of TQ-Systems GmbH.

4.2.1. Error FPGA

Severe failure. No access to FPGA. Send Unit for servicing.

4.2.2. Internal Communication failure

Severe failure. Send Unit for servicing.

4.2.3. Do System Restart

Switch device off and on again

4.3. General Failure

```
 Failure
Trans. Output
```

No output of transponder. Severe failure. Check environment. If no root cause can be discovered, send unit for servicing.

4.3.1. CRC Failure

```
>← GNSS Data
 Long.    100E42000
 Lat.     028N52444
 CRC Failure
```


© TQ-Systems GmbH. All information contained in this documents have to be treated strictly confidential. The transfer of presentations and know-how to third parties requires the prior written consent of TQ-Systems GmbH.

Data from GPS source not sufficient (no or not enough satellites)

4.4. Warnings

4.4.1. Battery Warning

In case the on board voltage falls below 11VDC, the following warning appears:

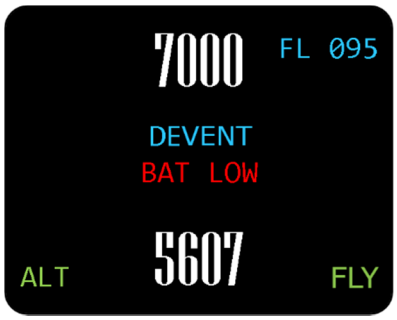

Take appropriate measures before the unit fails due to low voltage. The KTX2 is designed to operate above 9 VDC. Do not operate the unit below 9 volts.

4.4.2. Antenna Warning

In case of bad antenna adaption or antenna failure, the following message appears:

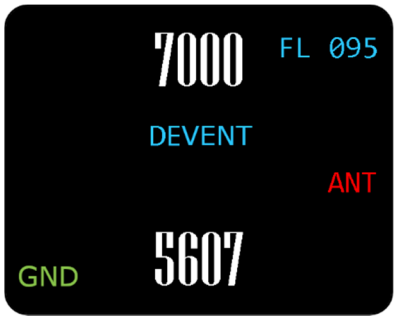

Check your antenna installation (cable, connectors etc.) to resolve the problem before next flight.

© TQ-Systems GmbH. All information contained in this documents have to be treated strictly confidential. The transfer of presentations and know-how to third parties requires the prior written consent of TQ-Systems GmbH.

4.4.3. TRX Warning

In case of weak transmitter signal, the following screen appears:

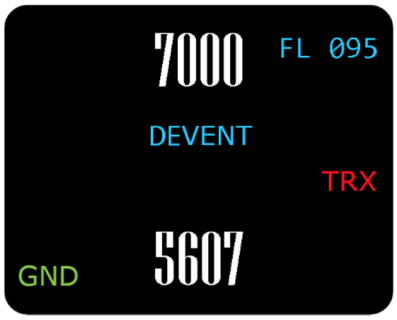

Weak transmitter power – Output power limited.

Degrading Failure. Check antenna installation including cable, plugs etc.

In order to be serviced, a defective transponder needs to be shipped to the nearest service station. For addresses see the TQ General Aviation website:

https://www.tq-general-aviation.com/en/Service

© TQ-Systems GmbH. All information contained in this documents have to be treated strictly confidential. The transfer of presentations and know-how to third parties requires the prior written consent of TQ-Systems GmbH.

5. Installation

5.1. Equipment Connections

5.1.1. Electrical Connections

The 15pin D-SUB connector at the rear side of the unit includes all electrical connections, except for the antenna.

<u>The plus cable must be protected with a 3A slow blow fuse!</u>

5.1.2. Mutual Suppression

Other equipment on board (e.g. DME) may transmit in the same frequency band as the transponder.

If such a device is installed a single wire bus (Suppression = active at

+12V) shall be installed in order to protect the receiving parts of the different devices from in-band transmissions.

Mutual suppression is a pulse that is sent to the other equipment to suppress transmission of a competing transmitter for the duration of the pulse train transmission. The transponder transmission may be suppressed by an external source and vice versa.

To activate mutual suppression the SUPP_I/O requires a +12V source from the other equipment.

Note:

All equipment connected to the suppression line must be re-inspected and reapproved before operation from a qualified avionic technician. Use shielded line.

5.1.3. Ground Switch

If a Ground-Switch is connected (and activated in the Setup), the transponder is enabled to distinguish between weight-on-wheel (On the Ground) and (In-Flight) conditions. In the weight-on-wheel condition the transponder automatically enters the Standby mode.

In order to complete this installation the input “FLY-GND“ must be connected to a switch, which connects the input with “GND“ in case there is weight on wheels, or remains open during flight.

This option must additionally be activated in the Setup. For details on configuration please refer to chapter 3.1.4.2.

5.1.4. Static Air Port

© TQ-Systems GmbH. All information contained in this documents have to be treated strictly confidential. The transfer of presentations and know-how to third parties requires the prior written consent of TQ-Systems GmbH.

Connect the static air connection on the back of the transponder to the static port and ensure a tight connection with a suitable hose clamp.

5.1.5. Interface

A GPS source can be connected to the serial interface (RS232) providing GPS position data (Extended Squitter) for use of ADS-B out.

Requirements:

- Required GPS hardware:
  - NexNav Mini (Part-No. 21.000) which turns the units into FAA 2020 mandate compliant device as required for TC'd aircraft.

  or

  - Standard NMEA0183 RMC data stream including the RMC-sub-format (4800/9600/38400 Baud).
- GPS hardware needs to be connected to pins 2 and 13. Power supply needs to be provided separately considering the required operating voltage for the GPS hardware.

Note:
For Connection to the NexNav Mini, a proprietary cable is available from TQ. Please contact you dealer for more information.

If a standard NMEA0183 WAAS GPS source is sufficient for your aircraft (LSA, Experimental, Ultralight etc.) you should consider recommended brands by TQ to avoid incompatibilities or malfunctions.

The WAAS GPS hardware used needs to be selected in the setup menu (see chap. 3.1.4.4).

© TQ-Systems GmbH. All information contained in this documents have to be treated strictly confidential. The transfer of presentations and know-how to third parties requires the prior written consent of TQ-Systems GmbH.

5.2. Wiring

5.2.1. Conductor Cross Section

Power Supply (Power, GND):	AWG20 (0,62 mm²)
Signals:	AWG22 (0,38 mm²)

The conductors must be approved for aircraft use. Recommended Quality:

MIL-Spec 22759/34, (Spec 55) 20AWG / 22AWG

Crimped D-Sub connector is always preferred against soldered connectors. Original TQ harness comply with common aviation wiring standards. Consult your approved aviation shop for installation details.

5.2.2. Wiring Scheme

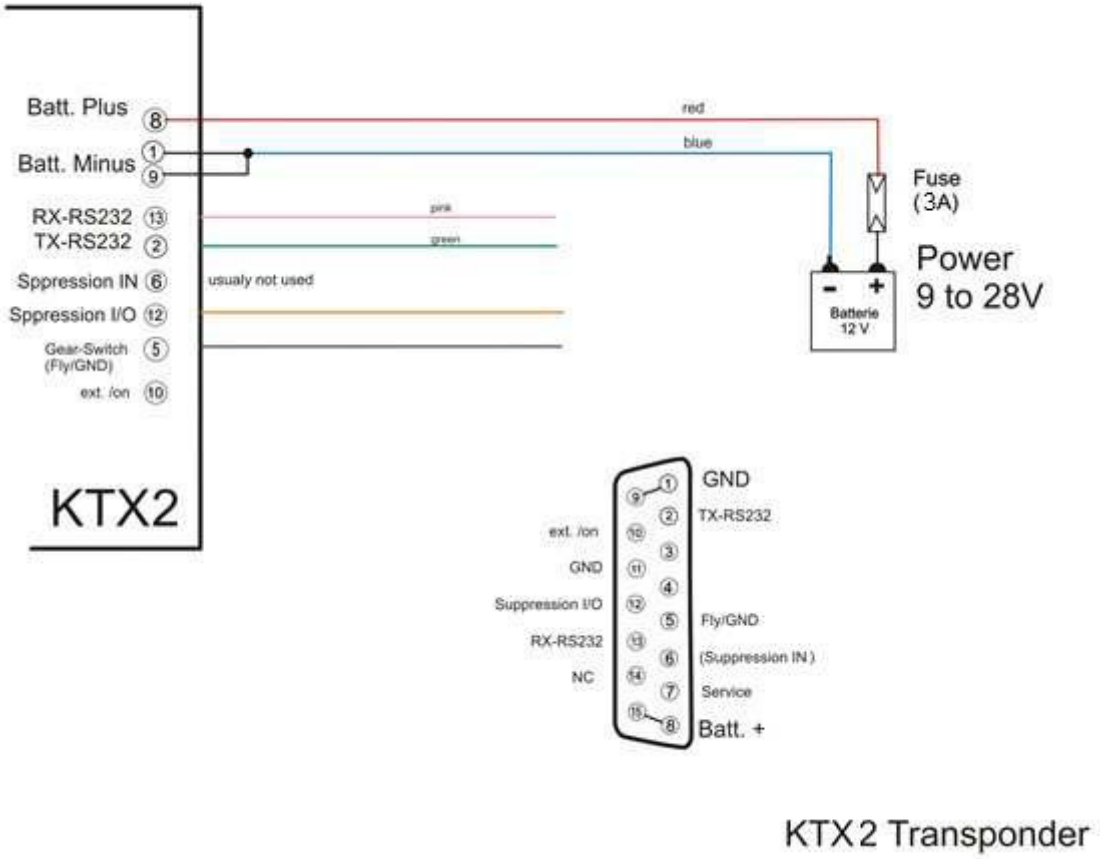

Figure 8: Wiring

© TQ-Systems GmbH. All information contained in this documents have to be treated strictly confidential. The transfer of presentations and know-how to third parties requires the prior written consent of TQ-Systems GmbH.

6. Drawings

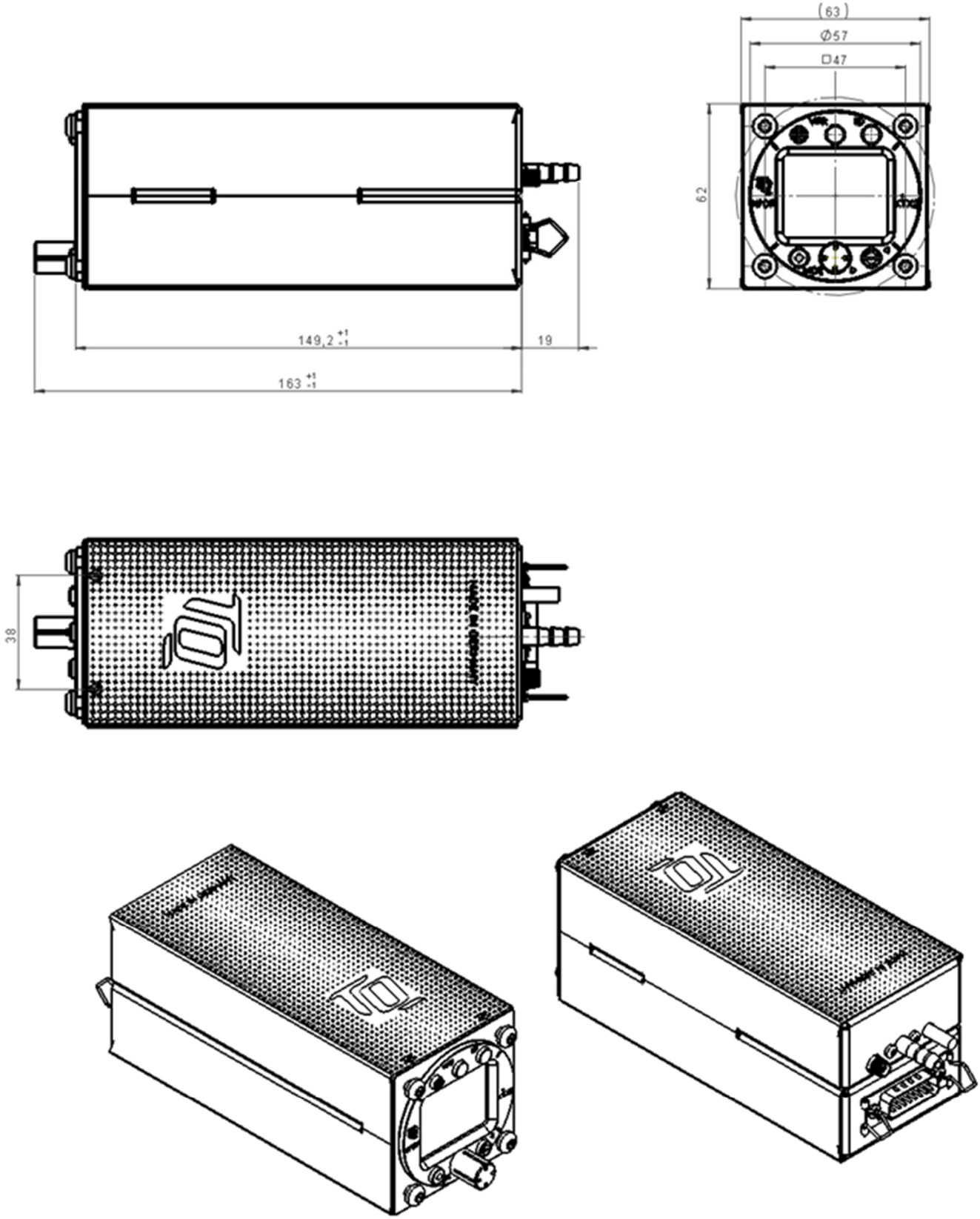

Figure 9: Dimensions of KTX2-S Standard round format

© TQ-Systems GmbH. All information contained in this documents have to be treated strictly confidential. The transfer of presentations and know-how to third parties requires the prior written consent of TQ-Systems GmbH.

7. Technical Data

7.1. General

Designation	
Authorization	EASA.21O.10069784
Certification	ETSO-C112d / TSO-C112d ETSO-C88a / TSO-C88a ETSO-C166b / TSO-C166b
Compliance	RTCA DO-181E /. ED-73E / Level 2els,Class 1 RTCA DO-178C/ ED-12C Level D RTCA DO-254 / ED80 Level C RTCA DO-160G / ED-14G RTCA DO-260B / ED102A Class B1S SAE AS8003 FCC ID: 2ANFF-KTX2S
Dimensions KTX2	63 x 62 x 149 (2.48” x 2.44” x 5.86”) pure housing
Weight	KTX2 0.381 kg
Mounting	KTX2: cut-out Ø 57 mm (2¼”)
Temperature ranges: **Operation** **Storage**	 -20 °C to +55 °C -55 °C to +85 °C
MAX. flight level	30 000ft
Vibration	DO-160G, Cat. S, Vibration Curve M
Humidity	RTCA DO-160G, Cat. A
Shock	6G operation 20G crash safety
RTCA DO-160F ENV. CAT.	[C4Z]CAB[SM]XXXXXXZ[BBB][AC]TTB[B2F2]XXAX
Power supply **Power consumption**	9 VDC to 33VDC (test @ 12VDC) • depending on the No of requests = 0.2 to 1.0A • Illumination 0.02A
Fuse	External fuse required: 3A, slow-blow
Compass security distance	300 mm

Figure 10: Technical Data

© TQ-Systems GmbH. All information contained in this documents have to be treated strictly confidential. The transfer of presentations and know-how to third parties requires the prior written consent of TQ-Systems GmbH.

7.2. Transmitter - Receiver

TRANSMITTER	
Receiver Characteristics: Sensitivity	RF input power level resulting in a 90 % reply rate: ■ MTL for ATCRBS and ATCRBS/Mode S All-Call interrogations: -74dBm ±3dB. ■ MTL for Mode S interrogations: -74dBm ± 3dB.
Reply transmission frequency	1090 ± 1MHz
RF Peak Power Output	≥ 24dBW (250 W) at antenna base (with maximum cable attenuation of 1,5dB)
Squitter	Transmitted at random intervals uniformly distributed over the range from 0.8 to 1.2 seconds, full self- verification of data and occurrence

RECEIVER	
ICAO 24-bit Aircraft Address (Hex-Code)	Aircraft Address as assigned by National Aviation Authority
FID	Flight ID: Flight Plan call sign or aircraft registration marking
Pressure Altitude	Up to 30 000ft in 25ft increments in-flight / on-ground
Flight Status	Reports the available data and means by which the transponder can report.

Figure 11: Transmitter receiver

© TQ-Systems GmbH. All information contained in this documents have to be treated strictly confidential. The transfer of presentations and know-how to third parties requires the prior written consent of TQ-Systems GmbH.

8. FCC related issues

8.1. Radiofrequency radiation exposure Information:

This transponder complies with FCC radiation exposure limits set forth for an uncontrolled environment. This transponder should be installed and operated with minimum distance of 200 mm between the radiator and your body.

This transmitter must not be co-located or operating in conjunction with any other antenna or transmitter.

8.2. Notice

This transponder has been tested and found to comply with the limits for a Class B digital device, pursuant to Part 15 of the FCC Rules. These limits are designed to provide reasonable protection against harmful interference in a residential installation. This transponder generates, uses and can radiate radio frequency energy and, if not installed and used in accordance with the instructions, may cause harmful interference to radio communications. However, there is no guarantee that interference will not occur in a particular installation. If this equipment does cause harmful interference to radio or television reception, which can be determined by turning the equipment off and on, the user is encouraged to try to correct the interference by one or more of the following measures:

- Reorient or relocate the receiving antenna.
- Increase the separation between the equipment and receiver.
- Connect the equipment into an outlet on a circuit different from that to which the receiver is connected.
- Consult the dealer or an experienced radio/TV technician for help.

8.3. Compliance

Notice: This device complies with Part 15 of the FCC Rules and with Industry Canada licence-exempt RSS standard(s).

Operation is subject to the following two conditions:

(1) this transponder may not cause harmful interference, and

(2) this transponder must accept any interference received, including interference that may cause undesired operation.

8.4. Modifications

Note:
Changes or modifications made to this transponder not expressly approved by TQ-Systems GmbH may void the FCC authorization to operate this equipment.

© TQ-Systems GmbH. All information contained in this documents have to be treated strictly confidential. The transfer of presentations and know-how to third parties requires the prior written consent of TQ-Systems GmbH.

9. Maintenance

9.1. Periodic Maintenance

The KTX2 Mode-S Transponder has been designed and manufactured to allow “on condition maintenance”. This means that there are no periodic service requirements necessary to maintain continued airworthiness, and no maintenance is required as long as it does properly perform its intended function. When service is required, a complete performance test shall be accomplished following any repair action. Repairs shall only be carried out in accordance with TQ-Systems GmbH service procedures.

9.2. Repair

Only exchange and flat repair of the equipment is permitted. In case of equipment malfunction, the unit must be sent to the manufacturer. Refer to section “1.2 Customer Service”.

9.3. Cleaning

Clean the display only with, lint-free cloth and an eyeglass lens cleaner that is specified as safe for anti-reflective coatings.

© TQ-Systems GmbH. All information contained in this documents have to be treated strictly confidential. The transfer of presentations and know-how to third parties requires the prior written consent of TQ-Systems GmbH.

10. Software License Conformity

Licensing conditions for Software which are developed or sold by the TQ Group companies, may contain free software components and open source software components. Specific software licensing conditions apply for these components. The license conditions which are relevant for the respective product can be found in the product documentation (e. g. order confirmation, product description, specification).

Information to TQ Systems software licenses can be found under

https://www.tq-group.com/en/Licensing-conditions-for-Software

For the Mode S Transponder KTX2 a software license clearing has been established in the TQ Systems license conformity review for the following.

Zlib
MIT
BSD-3-Clause
BSD-style
BSD
WebM
Freeware
ATT-style
GPL-3.0+-with-GCC-exception
TQSSLAv1.0.2

© TQ-Systems GmbH. All information contained in this documents have to be treated strictly confidential. The transfer of presentations and know-how to third parties requires the prior written consent of TQ-Systems GmbH.

TQ-Systems GmbH
Support E-mail: support.ktx@tq-group.com
Internet: www.tq-avionics.com

© TQ-Systems GmbH. All information contained in this documents have to be treated strictly confidential. The transfer of presentations and know-how to third parties requires the prior written consent of TQ-Systems GmbH.