DIGITAL PROPORTIONAL SYSTEM

2.4GHZ MT-203

SYSTEM SPECIFICATIONS

Transmitter

Model: MT-203T

RF Output Power: <100mW

Operating Voltage: 4.8 or 6V

Power Supply: 4 Cell Alkaline/Ni-Cd/Ni-MH

Weight: 8 oz(227g) with Alkalines

Frequency: 2.4GHz

Receiver

Model: MT-203RE

Frequency: 2.4GHz

Operating Voltage: 6.0~8.4V(Ni-cd)
6.0~7.4V(Li-poly 2s)

Weight: 0.26oz (7.4g)

Dimensions: 1.38 x 1 x 0.55in (35.1 x 25.3 x 14 mm)

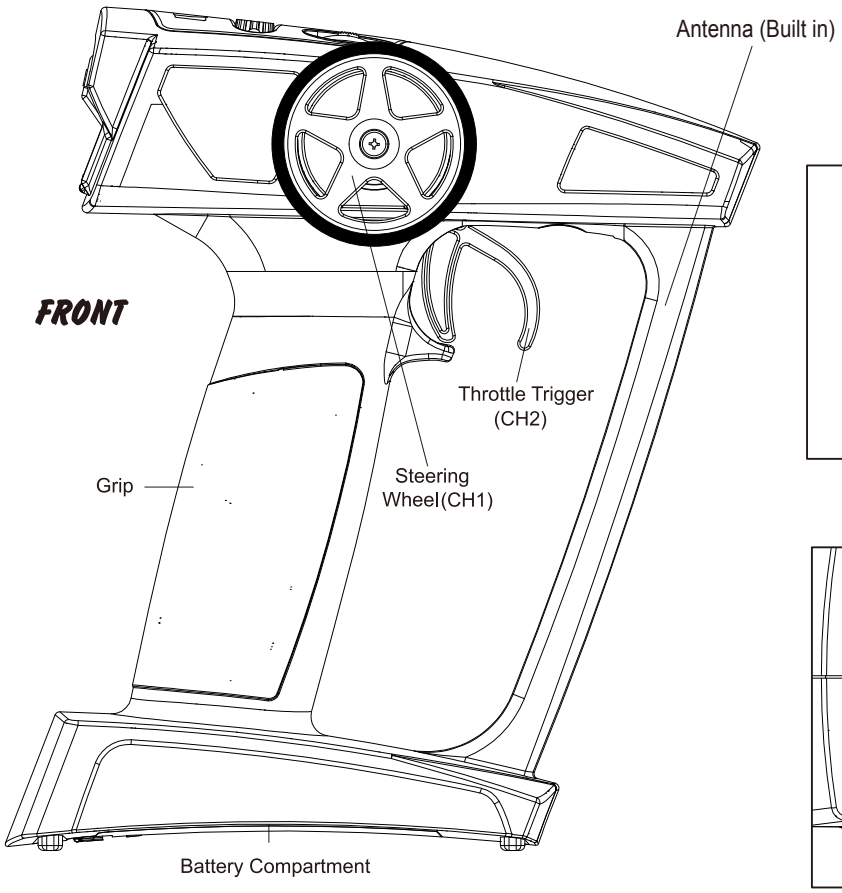

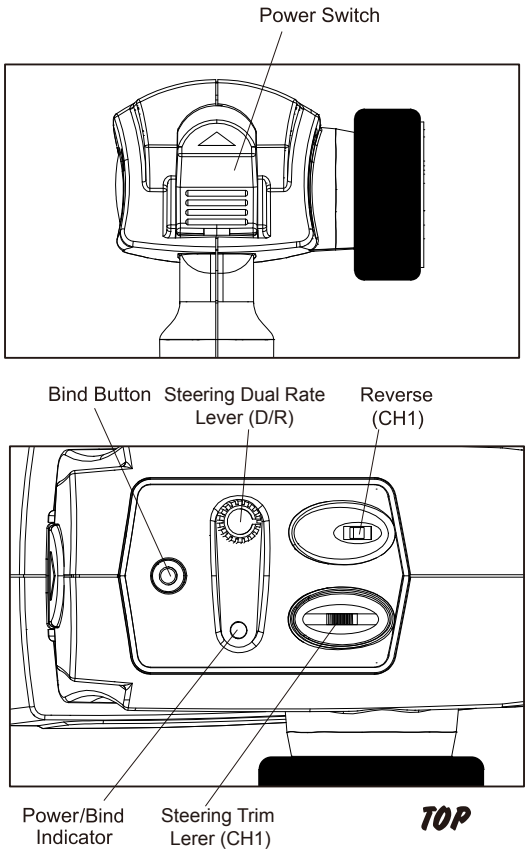

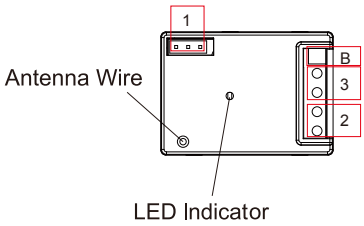

CONNECTION

"1": Connects to the steering servo
"2": Motor connector
"3": Battery connector
"B": Power switch

MT-203T：

1.CH1(Steering) Trim：

Steering neutral adjustments can be made by moving the steering trim lever to the left or right.

When you install a servo, always check to be sure the servo is at its neutral position. Adjust the servo horn position and linkage so both are parallel. Be sure the steering trim on the transmitter is at the neutral position.

2.CH1(Steering Dual-Rate)D/R：

Use this function to adjust the steering travel of your model. If the model understeers while cornering, add steering by rotating the CW side of the D/R knob. When the model oversteers, take away steering by rotating the C.CW side of the D/R knob.

3.CH1(Steering)Reverse：

If the servo operate in the opposite direction,moving the reverse lever

for the servo reversing.

4.Low Battery Indicator：

If the transmitter battery voltage drops below 4.2V the LED will be flashed.

MT-203RE：Receiver+ESC for 1/18 Car

1.CH1(Steering)Output：Connect the servo for steering operation.

2.Battery connector： Connects to the battery.Red is plus＋,Black is minus－. For Ni-cd battery 5～7cells(6.0～8.4V) or Lithium-Poly battery 2S(7.4V)

3.Motor connector：Connect to the motor.

4.CH2(Throttle) Operation：Forward 、reverse and brake are all linear.

When switched to reverse operation just returning the throttle trigger from the brake position to the neutral position.

5.Low-battery&Heat protection：When the battery voltage drops below 5.5V or the FET are over heat,the motor will shut off and the LED will be rapid flash.

MT-203T&MT-203RE Bind：

Binding Process

1.Turn the transmitter power on while pressing the bind sw.

2.The transmitter Red LED will flashing for 20 seconds.

3.Plug the battery into the MR-202, then turn on the power while the transmitter LED is flashing.

4.When the LED on the receiver unit is steady light ,binding is complete.

5.When the binding procedure is successful, the LED on the receiver will stay solid red when both the transmitter and receiver are turned on.

MT-203T LED Display

LED ON：Power on

LED Rapid Flash：Battery low

LED Slow Flash：Bind mode

MT-203RE LED Display

LED OFF：Indicates that the power is off or no signal reception

LED ON：Receiving signals

LED Rapid Flash：Battery low or heat protector is detected.

FCC Caution:

This device complies with part 15 of the FCC Rules. Operation is subject to the following two conditions: (1) This device may not cause harmful interference, and (2) this device must accept any interference received, including interference that may cause undesired operation.

Any Changes or modifications not expressly approved by the party responsible for compliance could void the user's authority to operate the equipment.

Note: This equipment has been tested and found to comply with the limits for a Class B digital device, pursuant to part 15 of the FCC Rules. These limits are designed to provide reasonable protection against harmful interference in a residential installation. This equipment generates uses and can radiate radio frequency energy and, if not installed and used in accordance with the instructions, may cause harmful interference to radio communications. However, there is no guarantee that interference will not occur in a particular installation. If this equipment does cause harmful interference to radio or television reception, which can be determined by turning the equipment off and on, the user is encouraged to try to correct the interference by one or more of the following measures:

-Reorient or relocate the receiving antenna.

-Increase the separation between the equipment and receiver.

-Connect the equipment into an outlet on a circuit different from that to which the receiver is connected.

-Consult the dealer or an experienced radio/TV technician for help.

The device has been evaluated to meet general RF exposure requirement. The device can be used in portable exposure condition without restriction.