Radiocontrolli
Wireless Modules

Sub 1GHz Multichannels Radio Transceiver

It is a low cost sub 1GHz multichannels transceiver designed for low-consumption wireless applications. The hardware is based on Texas Instruments CC1101 component.
Programmable from external microcontroller via SPI interface.
SMT Version

Operative Frequency Band : 915MHz

Technical Characteristics

Characteristics	MIN	TYP	MAX	UNIT
Supply Voltage	1.8	3	3.6	VDC
Supply Current (RX mode / TX mode)		18/30		mA
Supply Corrente Power Down mode		0.2		µA
Operative Frequency band		915		MHz
RF Power Output 50ohm		+10		dBm
RF Sensitivity (1.2 Kb/sec data rate)		- 112		dBm
Data Rate	1.2		500	Kbit/s
Operating Temperature Range	-20		+70	°C

For more information and details, please refer to the CC1101 Texas Instruments datasheet.
It uses an industrial high precision 26MHz crystal.

Applications :

- Wireless security systems
- Home and building automation
- Automatic Measure Reading
- Industrial Control and Monitoring
- Wireless Sensor Network

Feature :

- Bidirectional multichannel Link
- Low consumption technology

Radiocontrolli s.r.l refuses any responsibility for irregular uses of the devices and for any possible lack or inaccuracy of the data and reserves the right to change in whole or in part these information without notice.

Radiocontrolli Wireless Modules

Mechanicals Dimension (mm)

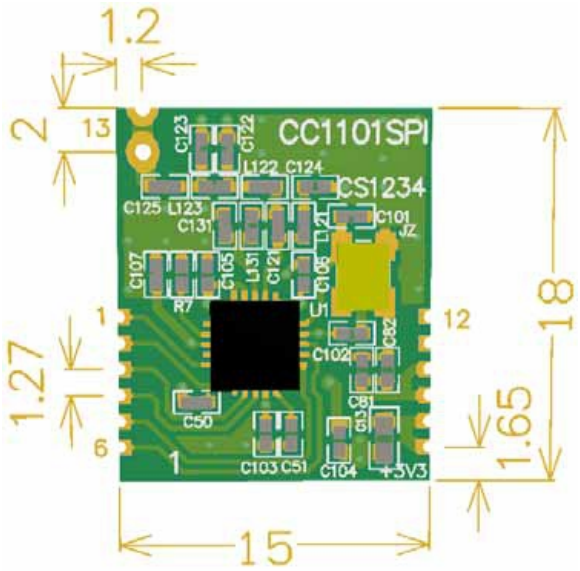

Pin Out RC-CC1101-SPI-SMT

Pads	Name	Description
1	SI	Serial Configuration interface SPI -----> Data Input
2	SCLK	Serial Configuration Interface SPI -----> Clock Input
3	S0	Serial Configuration Interface SPI -----> Data Output
4	GD02	Digital Output
5	GD00	Digital Output
6	CSn	Serial Configuration Interface SPI -----> Chip Select
7	VCC	Power Supply
8	VCC	Power Supply
9	GND	Gnd
10	GND	Gnd
11	NC	Not Used
12	NC	Not Used

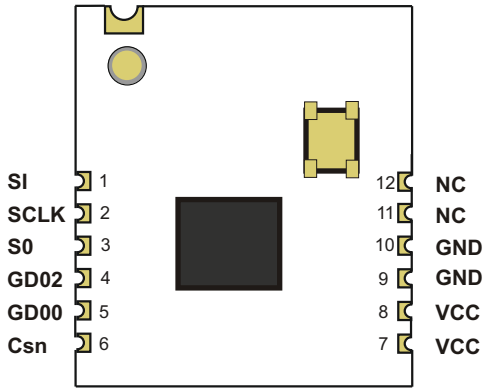

SCHEMATICS

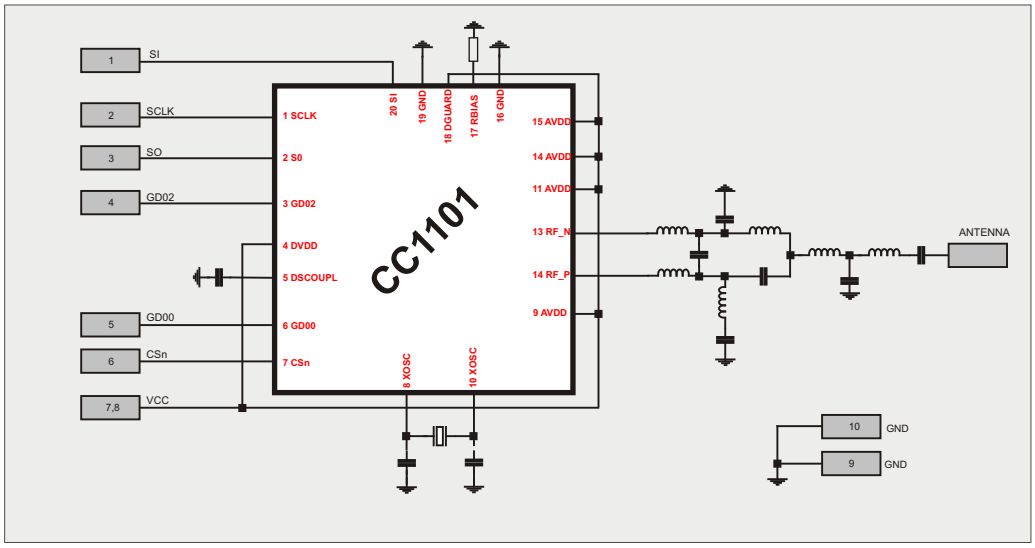

Radiocontrolli s.r.l refuses any responsibility for irregular uses of the devices and for any possible lack or inaccuracy of the data and reserves the right to change in whole or in part these information without notice.

Recommended Hardware design

1) Hardware

All unused pins should be left floating; do not ground.
All GND pins must be well grounded.
Traces should not be routed underneath the module.

2) Power Supply

The transceiver module must be powered from a regulated voltage.
It is recommended to keep the power supply line for VCC as short and low impedence as possible. Near the power pins it is recommended to insert a ceramic the decoupling capacitor (100nF).

3) Ground Plane

It is recommended to have a copper ground plane under the module. The ground plane should be unbroken.

4) Module Placement (PCB Antenna version)

The antenna on the PCB has an omnidirectional radiation pattern. To maximize antenna efficiency, an adequate grounding plane must be provided under the module. Instead the areas underneath and surrounding the antenna area must be free of copper.

Radiocontrolli s.r.l refuses any responsibility for irregular uses of the devices and for any possible lack or inaccuracy of the data and reserves the right to change in whole or in part these information without notice.

FCC Statement

This device complies with part 15 of the FCC rules. Operation is subject to the following two conditions:
(1) this device may not cause harmful interference, and (2) this device must accept any interference received, including
interference that may cause undesired operation.
Changes or modifications not expressly approved by the party responsible for compliance could void the user' s authority to operate the equipment.
NOTE: This equipment has been tested and found to comply with the limits for a Class B digital device, pursuant to part 15 of the FCC Rules. These limits are designed to provide reasonable protection against harmful interference in a residential installation. This equipment generates uses and can radiate radio frequency energy and, if not installed and used in accordance with the instructions, may cause harmful interference to radio communications. However, there is no guarantee that interference will not occur in a particular installation. If this equipment does cause harmful interference to radio or television reception, which can be determined by turning the equipment off and on, the user is encouraged to try to correct the interference by one or more of the following measures:

-Reorient or relocate the receiving antenna.

-Increase the separation between the equipment and receiver.

-Connect the equipment into an outlet on a circuit different from that to which the receiver is connected.

-Consult the dealer or an experienced radio/TV technician for help important announcement
Important Note:
Radiation Exposure Statement
This equipment complies with FCC radiation exposure limits set forth for an uncontrolled environment. This equipment should be installed and operated with minimum distance 20cm between the radiator and your body.
This transmitter must not be co-located or operating in conjunction with any other antenna or transmitter.
Country Code selection feature to be disabled for products marketed to the US/Canada.
This device is intended only for OEM integrators under the following conditions:
1.The antenna must be installed such that 20 cm is maintained between the antenna and users,and
2.The transmitter module may not be co-located with any other transmitter or antenna,
3.For all products market in US, OEM has to limit the operation channels in CH00 to CH41 for 902-928MHz band by supplied firmware programming tool. OEM shall not supply any tool or info to the end-user regarding to Regulatory Domain change. (if modular only test Channel 00-41).
As long as the three conditions above are met, further transmitter testing will not be required. However, the OEM integrator
is still responsible for testing their end-product for any additional compliance requirements required with this module installed.

Important Note:

In the event that these conditions cannot be met (for example certain laptop configurations or co-location with another
transmitter), then the FCC authorizations no longer considered valid and the FCC ID cannot be used on the final product. In these circumstances, the OEM integrator will be responsible for re-evaluating the end product (including the transmitter)
and obtaining a separate FCC authorization.

End Product Labeling

The final end product must be labeled in a visible area with the following" Contains FCC ID: **2ANH5-RC-CC1101-915**

Manual Information to the End User

The OEM integrator has to be aware not to provide information to the end user regarding how to install or remove this RF
module in the user's manual of the end product which integrates this module.
The end user manual shall include all required regulatory information/warning as show in this manual.

Radiocontrolli s.r.l refuses any responsibility for irregular uses of the devices and for any possible lack or inaccuracy of the data and reserves the right to change in whole or in part these information without notice.

Integration instructions for host product manufacturers according to KDB 996369 D03 OEM Manual v01

2.2 List of applicable FCC rules
CFR 47 FCC PART 15 SUBPART C has been investigated. It is applicable to the modular transmitter

2.3 Specific operational use conditions
This module is stand-alone modular. If the end product will involve the Multiple simultaneously transmitting condition or different operational conditions for a stand-alone modular transmitter in a host, host manufacturer have to consult with module manufacturer for the installation method in end system.

2.4 Limited module procedures

Not applicable

2.5 Trace antenna designs Not applicable
Not applicable

2.6 RF exposure considerations
This equipment complies with FCC radiation exposure limits setforth for an uncontrolled environment. This equipment should be installed and operated with minimum distance 20cm between the radiator & your body.

2.7 Antennas
This radio transmitter FCC ID: **2ANH5-RC-CC1101-915** has been approved by Federal Communications Commission to operate with the antenna types listed below, with the maximum permissible gain indicated. Antenna types not included in this list that have a gain greater than the maximum gain indicated for any type listed are strictly prohibited for use with this device.

Antenna No.	Type of antenna	Gain of the antenna	Frequency range
	Helical	0dBi	902-928MHz

2.8 Label and compliance information
The final end product must be labeled in a visible area with the following" Contains FCC ID: **2ANH5-RC-CC1101-915**

2.9 Information on test modes and additional testing requirements
Host manufacturer is strongly recommended to confirm compliance with FCC requirements for the transmitter when the module is installed in the host.

2.10 Additional testing, Part 15 Subpart B disclaimer
Host manufacturer is responsible for compliance of the host system with module installed with all other applicable requirements for the system such as Part 15 B.

Radiocontrolli s.r.l refuses any responsibility for irregular uses of the devices and for any possible lack or inaccuracy of the data and reserves the right to change in whole or in part these information without notice.