Radiocontrolli
Wireless Modules

Ultra Low Power sub 1GHz Multichannels Radio Transceiver

The **RC-CC1310-915-H** module is based on Texas Instruments CC1310F128 component. This device combines a flexible, very low power RF transceiver with a powerful 48 MHz Cortex M3 microcontroller in a platform supporting multiple physical layers and RF standard.

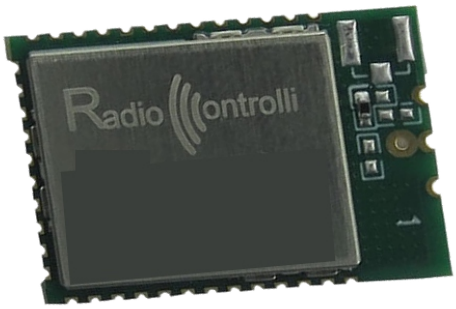

Sub-1Ghz technology is becoming one of the chief driving forces behind the **Internet of Things (Iot)**, in particular this type of module is ideal for this applications basically for the following reasons :

Ultra low power consumption, the consumption of this device is 5.5mA when receiving and 23.5mA when transmitting, in sleep mode the consumption is 0.6µA (microamps).

Long range operations, the sensitivity parameter is -110dBm at data rates of 50 kbps and down to -124dBm when the data rate is 0.625kbps.
Interference from other wireless communications can be overcome with 90dB of blocking.

All this ensure a robust signaling for long range communications.

SimpleLink-Easylink compatibility,ultra-low power platform designed (from TI) to easily implement the long-range connectivity with low power consumption on the Internet of Things projects (IoT).

TI-15.4 Stack, IEEE802.15.4e/g Standard Based Star Networking Software Designed for long range & robust star networks.

6LoWPAN compatibility with mesh network stack for **Contiki.**

Applications :

- Low-Power Wireless Systems
- Smart Grid and Automatic Meter Reading
- Home and Building Automation
- Wireless Sensor Network
- 6LoWPAN systems

Feature :

- IEEE 802.15.4g mode switch support
- Ultra Low consumption technology
- Powerful ARM Cortex M3
- Supported by the open platform Contiki 6LoWPAN.
- Very Small size

Radiocontrolli s.r.l refuses any responsibility for irregular uses of the devices and for any possible lack or inaccuracy of the data and reserves the right to change in whole or in part these information without notice.

RC-CC1310-XXX					
Parameter	Symbol	Min.	Typ.	Max.	Units
Operating Voltage	V_{CC}	1.8	3.00	3.8	VDC
Supply Current RX Mode	I_{CRX}		5.50		mA
Supply Current TX Mode	I_{CTX1}		13.40		mA
Supply Current TX Mode	I_{CTX2}		23.50		mA
Supply Current Standby Mode	I_{CSTB}		0,70		µA
Supply Current Shut Down Mode	I_{CSHU}		185		nA
Operative Frequency Band	F_{of}		915		MHz
Frequency Error	F_{pp}		±10		ppm
RF Power Output 50ohm (*)	/	/			/
RF Sensibility 50kbps	S_d		-110.0		dBm
RF Sensibility Long Range Mode 625bps	S_{LR}		-124.0		dBm
Data Rate	D_{CC}	0,01		4.0	Mbit/s
Operative Temperature	T_{LR}	-30		+75	°C

(*) Programmable parameter.

MICROCONTROLLER:
- Power ARM Cortex - M3
- Up to 48MHz Clock Speed
- 128KB of On-System Programming Flash
- 8KB of SRAM for Cache (or as General-Purpose RAM)
- 20KB of Ultralow Leakege SRAM
- Support Over-the-Air Upgrade (OTA)

For more information and details, please refer to the CC1310 Texas Instruments datasheet.

Block Diagram

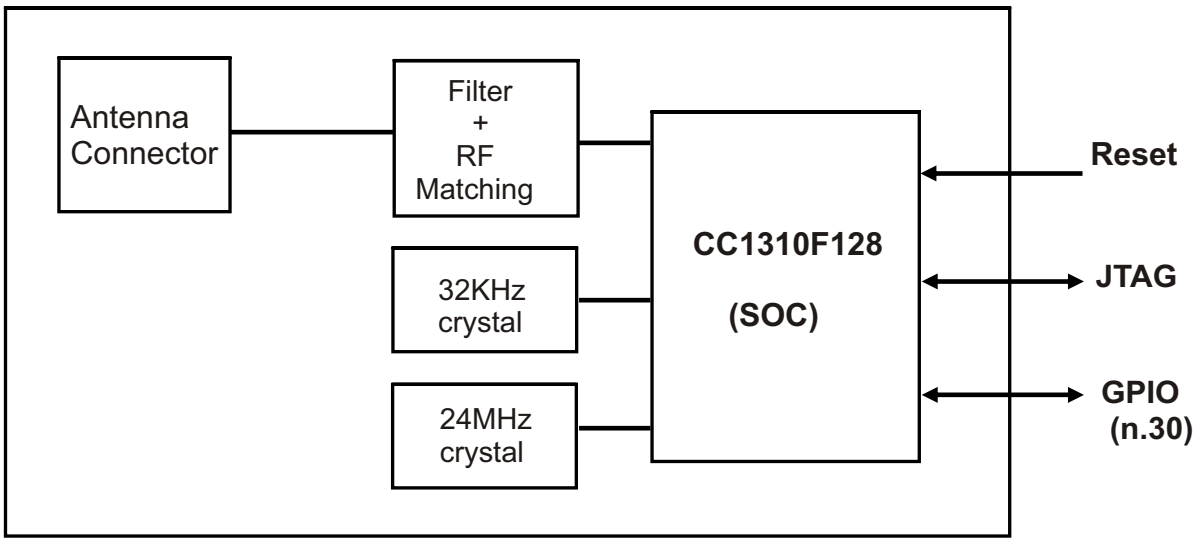

Reference Schematics

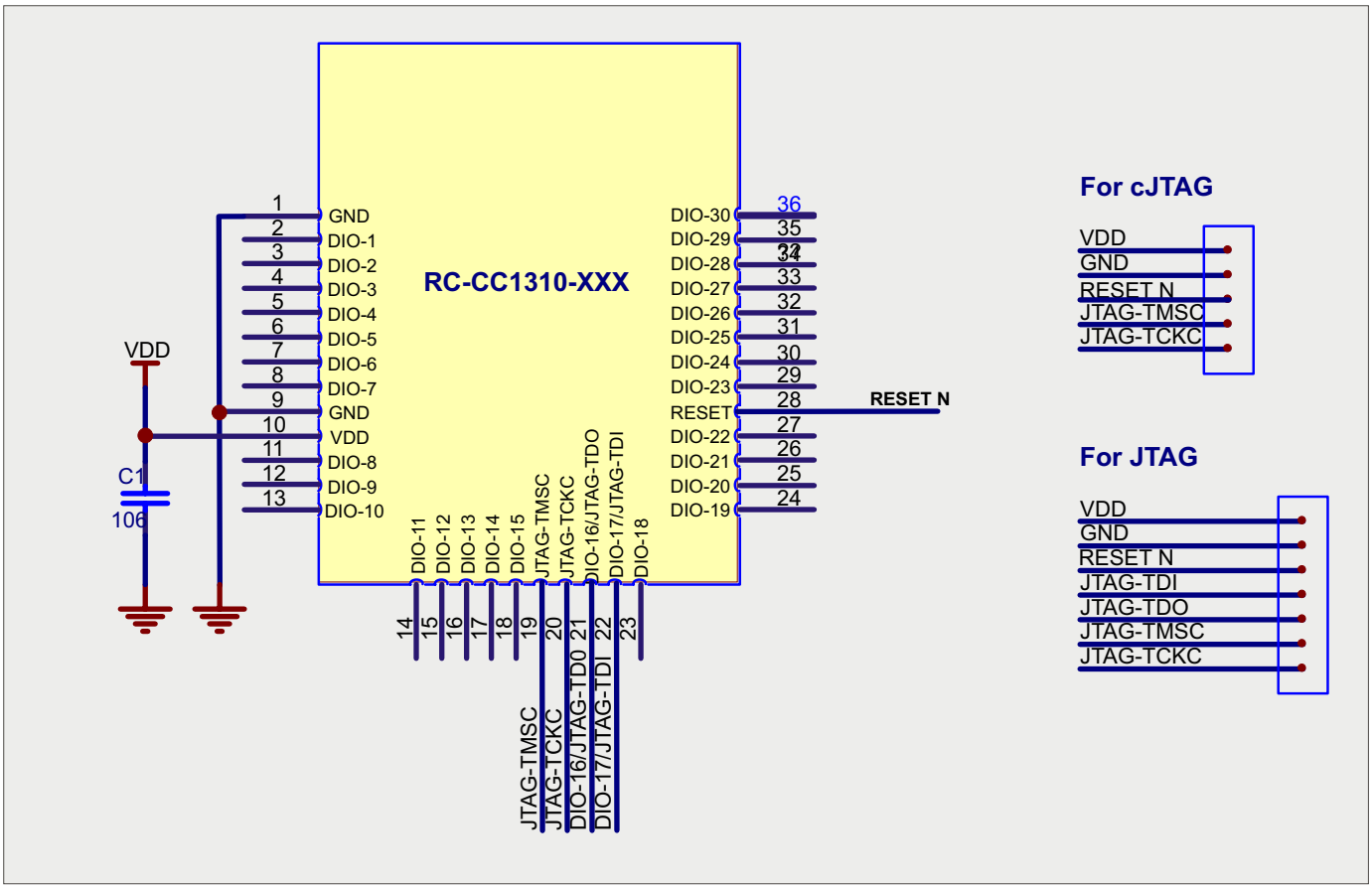

Mechanical Dimension

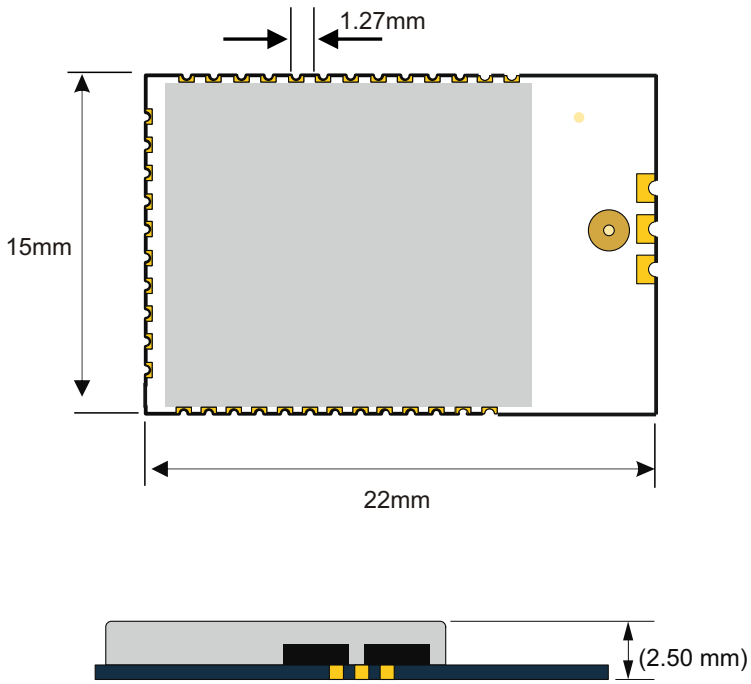

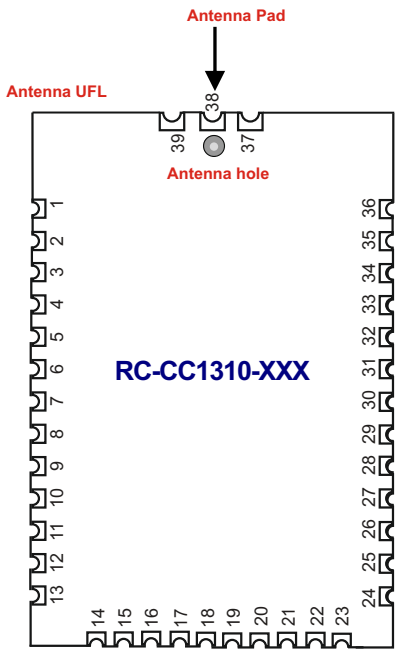

Radiocontrolli s.r.l refuses any responsibility for irregular uses of the devices and for any possible lack or inaccuracy of the data and reserves the right to change in whole or in part these information without notice.

Terminal description RC-CC1310-915-H

Pads	Name	Description
1	GND	Ground
2	DIO-1	GPIO,Sensor Controller, High drive capability
3	DIO-2	GPIO, Sensor Controller, High drive capability
4	DIO-3	GPIO, Sensor Controller, High drive capability
5	DIO-4	GPIO, Sensor Controller, High drive capability
6	DIO-5	GPIO, Sensor Controller, High drive capability
7	DIO-6	GPIO, Sensor Controller, High drive capability
8	DIO-7	GPIO, Sensor Controller, High drive capability
9	GND	Ground
10	VDD	Power
11	DIO-8	GPIO
12	DIO-9	GPIO
13	DIO-10	GPIO
14	DIO-11	GPIO
15	DIO-12	GPIO
16	DIO-13	GPIO
17	DIO-14	GPIO
18	DIO-15	GPIO
19	JTAG-TMSC	JTAG TMSC, High drive capability
20	JTAG-TCKC	JTAG TCKC
21	DIO-16	GPIO,JTAG -TDO, High drive capability
22	DIO-17	GPIO,JTAG-TDI, High drive capability
23	DIO-18	GPIO
24	DIO-19	GPIO
25	DIO-20	GPIO
26	DIO-21	GPIO
27	DIO-22	GPIO
28	RESET-N	RESET, (Active low)
29	DIO-23	GPIO, Sensor Controller, Analog
30	DIO-24	GPIO, Sensor Controller, Analog
31	DIO-25	GPIO, Sensor Controller, Analog
32	DIO-26	GPIO, Sensor Controller, Analog
33	DIO-27	GPIO, Sensor Controller, Analog
34	DIO-28	GPIO, Sensor Controller, Analog
35	DIO-29	GPIO, Sensor Controller, Analog
36	DIO-30	GPIO, Sensor Controller, Analog
37	GND	Ground
38	Antenna	Antenna PAD
39	GND	Ground

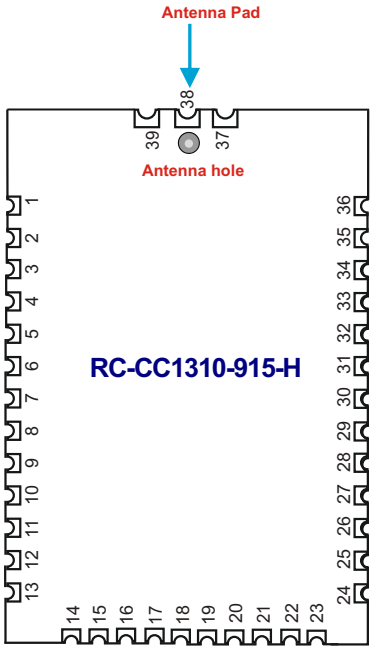

Antenna connection

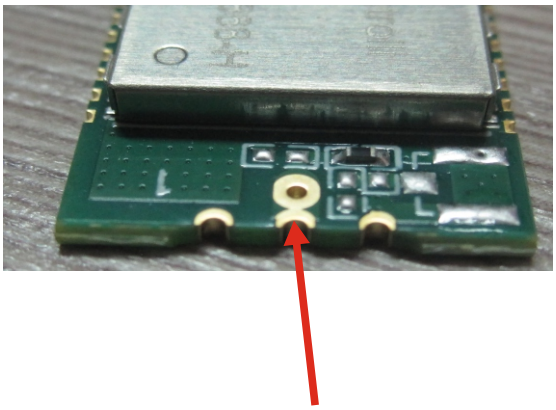

- Antenna connection trought hole and pad

Radiocontrolli s.r.l refuses any responsibility for irregular uses of the devices and for any possible lack or inaccuracy of the data and reserves the right to change in whole or in part these information without notice.

RC-CC1310-915-H Adapter board

To make immediate usable the RC-CC1310-915-H module with TI development systems has been realized the following board adapter.

Adapter board front

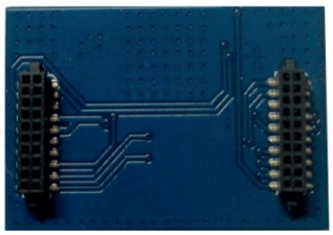

Adapter board rear

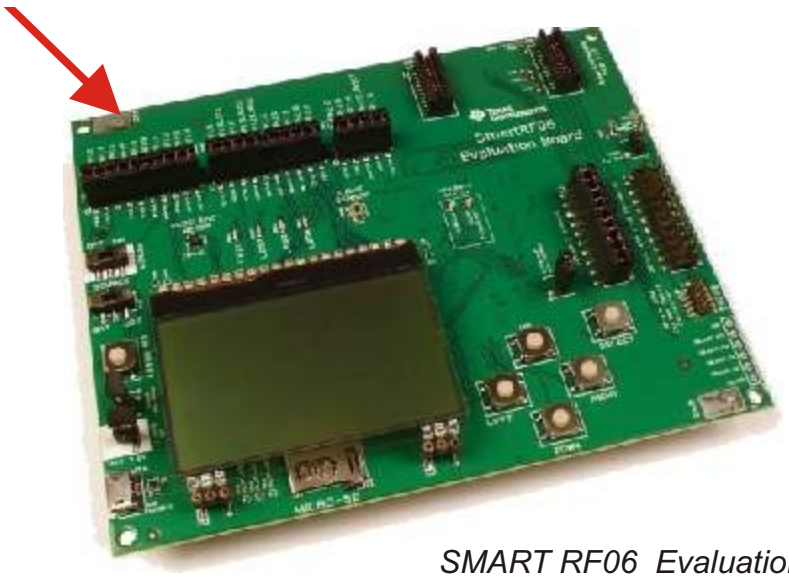

SMART RF06 Evaluation board (TI)

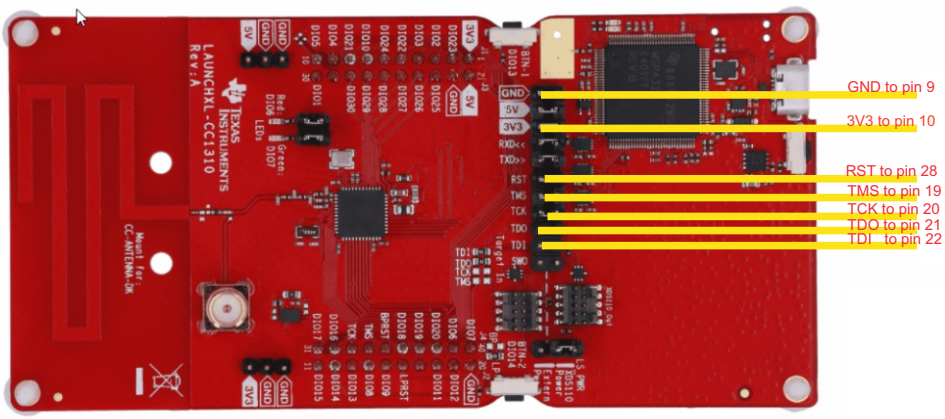

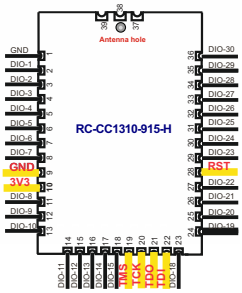

Texas Instruments Launchpad Connection

Radiocontrolli s.r.l refuses any responsibility for irregular uses of the devices and for any possible lack or inaccuracy of the data and reserves the right to change in whole or in part these information without notice.

Recommended Hardware design

1) Hardware

All unused pins should be left floating; do not ground.
All GND pins must be well grounded.
Traces should not be routed underneath the module.

2) Power Supply

The transceiver module must be powered from a regulated voltage.
It is recommended to keep the power supply line for VCC as short and low impedence as possible. Near the power pins it is recommended to insert a ceramic the decoupling capacitor (100nF).

3) Ground Plane

It is recommended to have a copper ground plane under the shielded zone of the module. The ground plane should be unbroken.

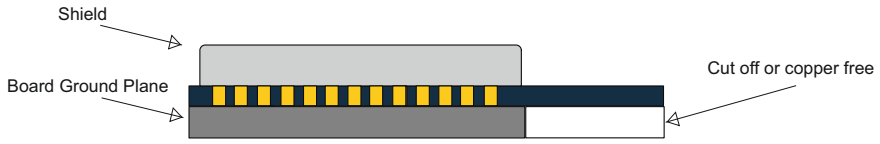

4) Module Placement

The antenna on the PCB has an omnidirectional radiation pattern. To maximize antenna efficiency, an adequate grounding plane must be provided under the module. Instead the areas underneath and surrounding the antenna area must be free of copper.

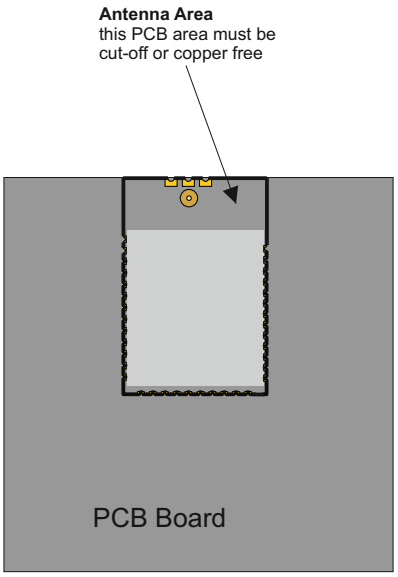

Recommended location XY plane

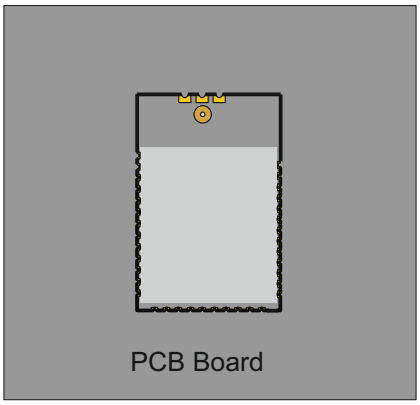

Not Recommended location XY plane

Radiocontrolli s.r.l refuses any responsibility for irregular uses of the devices and for any possible lack or inaccuracy of the data and reserves the right to change in whole or in part these information without notice.

Recommended PCB Layout

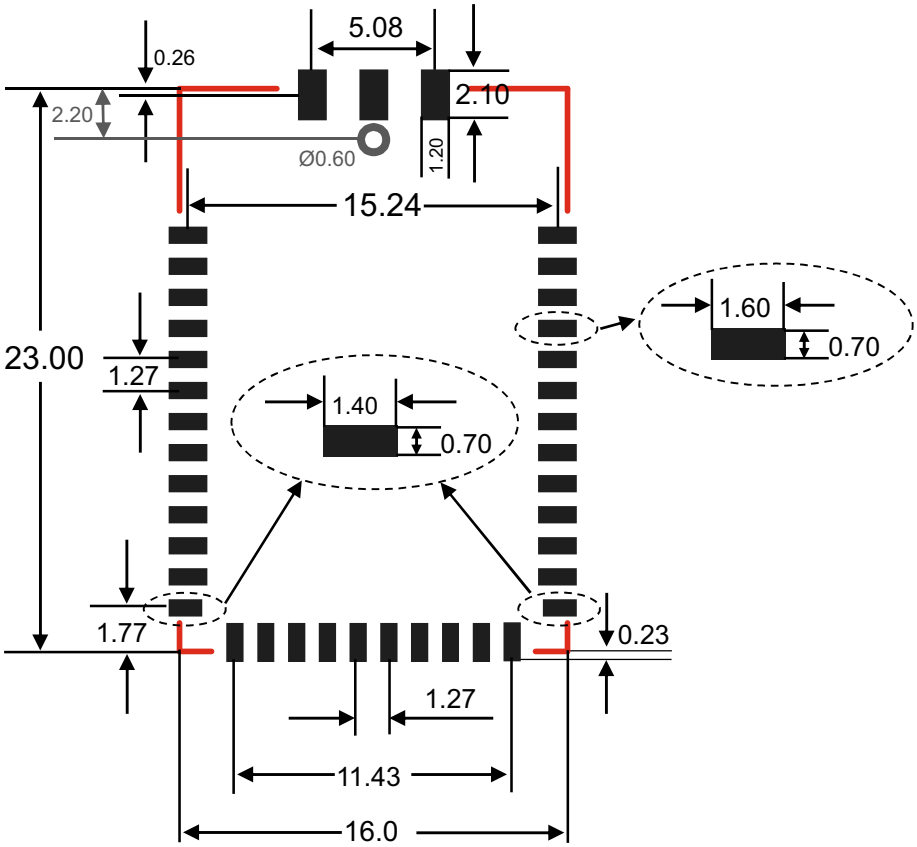

Recommended Reflow Profile for Lead Free Solder

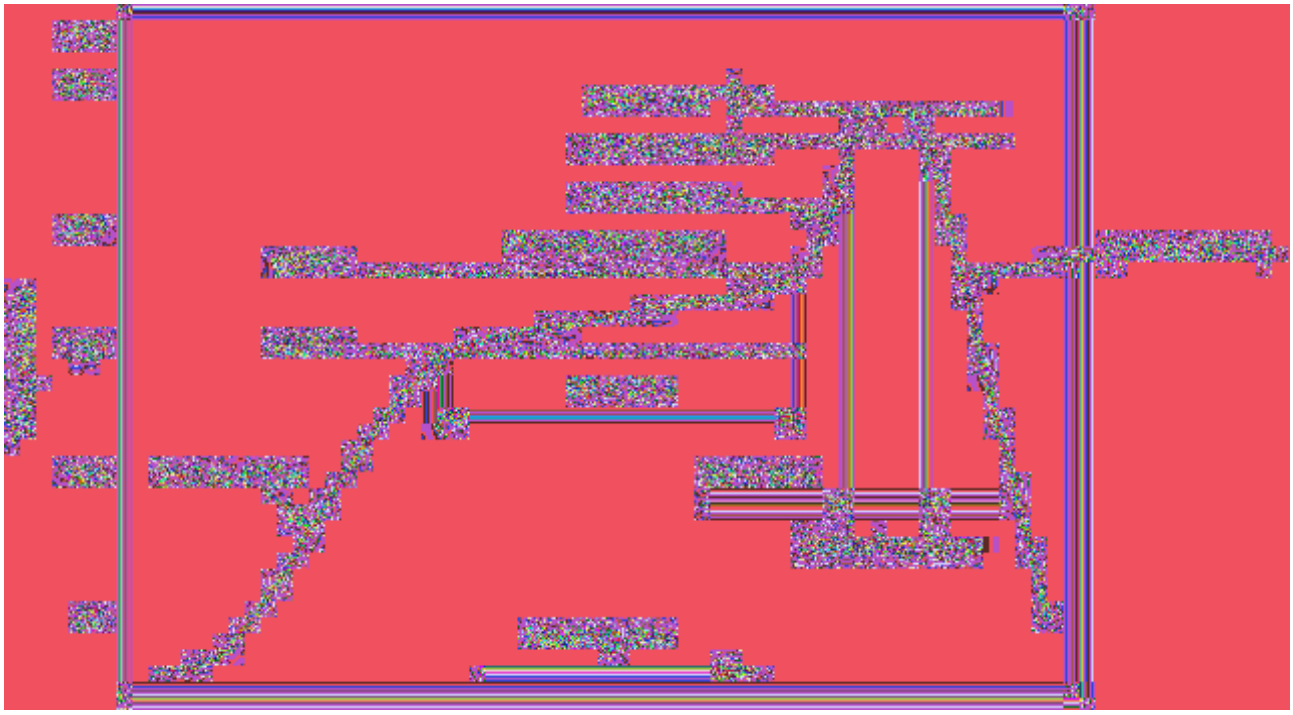

Radiocontrolli s.r.l refuses any responsibility for irregular uses of the devices and for any possible lack or inaccuracy of the data and reserves the right to change in whole or in part these information without notice.

REEL DIMENSIONS

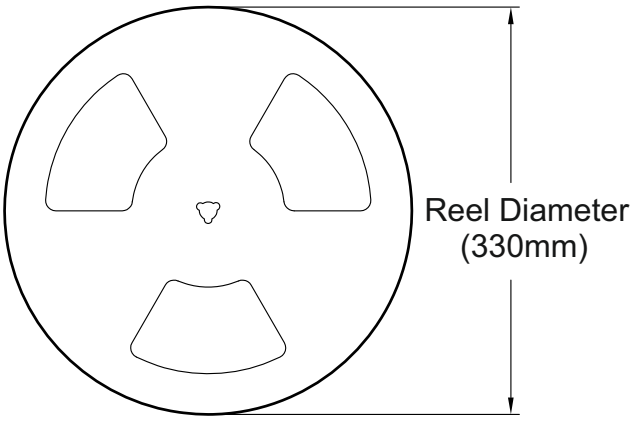

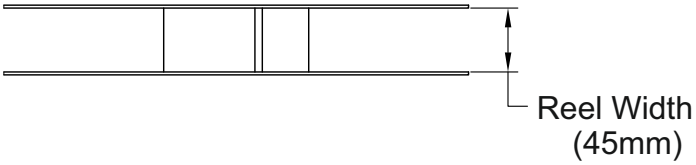

TAPE DIMENSIONS

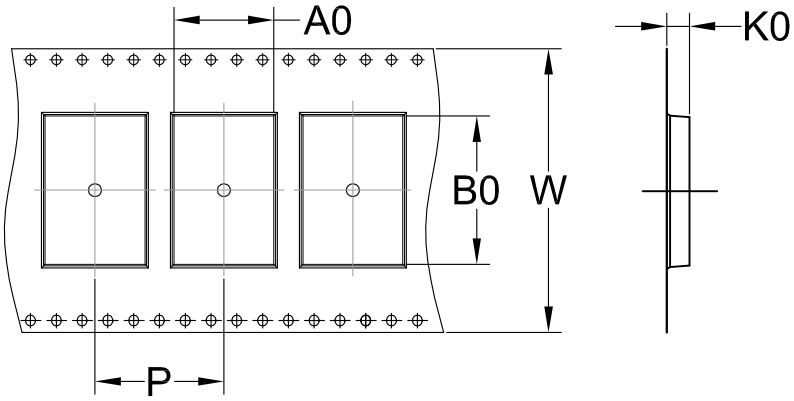

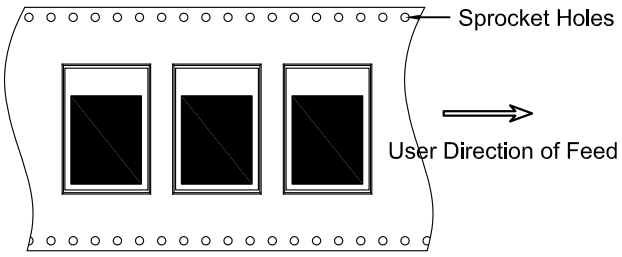

A0	Dimension designed to accommodate the component width	15.5mm	± 0.10mm
B0	Dimension designed to accommodate the component length	23.0mm	± 0.10mm
K0	Dimension designed to accommodate the component thickness	3.5mm	± 0.10mm
W	Overall width of the carrier tape	44.0mm	± 0.30mm
P	Pitch between successive cavity centers	20.0mm	± 0.10mm

Radiocontrolli s.r.l refuses any responsibility for irregular uses of the devices and for any possible lack or inaccuracy of the data and reserves the right to change in whole or in part these information without notice.

FCC Statement

This equipment has been tested and found to comply with the limits for a Class B digital device, pursuant to part 15 of the FCC Rules. These limits are designed to provide reasonable protection against harmful interference in a residential installation. This equipment generates, uses and can radiate radio frequency energy and, if not installed and used in accordance with the instructions, may cause harmful interference to radio communications. However, there is no guarantee that interference will not occur in a particular installation. If this equipment does cause harmful interference to radio or television reception, which can be determined by turning the equipment off and on, the user is encouraged to try to correct the interference by one or more of the following measures:

- Reorient or relocate the receiving antenna.
- Increase the separation between the equipment and receiver connected.
- Connect the equipment into an outlet on a circuit different from that to which the receiver is connected.
- Consult the dealer or an experienced radio/TV technician for help.

Caution: Any changes or modifications to this device not explicitly approved by manufacturer could void your authority to operate this equipment.
This device complies with part 15 of the FCC Rules. Operation is subject to the following two conditions: (1) This device may not cause harmful interference, and (2) this device must accept any interference received, including interference that may cause undesired operation.
Important Note:

Radiation Exposure Statement

This equipment complies with FCC radiation exposure limits set forth for an uncontrolled environment
. This equipment should be installed and operated with minimum distance 20cm between the radiator and your body.
This transmitter must not be co-located or operating in conjunction with any other antenna or transmitter. Country Code selection feature to be disabled for products marketed to the US.
This device is intended only for OEM integrators under the following conditions:

1. The antenna must be installed such that 20 cm is maintained between the antenna and users,and
2. The transmitter module may not be co-located with any other transmitter or antenna,

As long as the three conditions above are met, further transmitter testing will not be required. However, the OEM integrator is still responsible for testing their end-product for any additional compliance requirements required with this module installed.

Important Note:

In the event that these conditions cannot be met (for example certain laptop configurations or co-location with another transmitter), then the FCC authorization is no longer considered valid and the FCC ID cannot be used on the final product. In these circumstances, the OEM integrator will be responsible for reevaluating the end product (including the transmitter) and obtaining a separate FCC authorization.

End Product Labeling

The final end product must be labeled in a visible area with the following" Contains FCC ID: 2ANH5RC-CC1310-915H"

Manual Information to the End User

The OEM integrator has to be aware not to provide information to the end user regarding how to install or remove this RF module in the user's manual of the end product which integrates this module. The end user manual shall include all required regulatory information/warning as show in this manual.

Radiocontrolli s.r.l refuses any responsibility for irregular uses of the devices and for any possible lack or inaccuracy of the data and reserves the right to change in whole or in part these information without notice.

Integration instructions for host product manufacturers according to KDB 996369 D03 OEM Manual v01

2.2 List of applicable FCC rules

CFR 47 FCC PART 15 SUBPART C has been investigated. It is applicable to the modular transmitter

2.3 Specific operational use conditions

This module is stand-alone modular. If the end product will involve the Multiple simultaneously transmitting condition or different operational conditions for a stand-alone modular transmitter in a host, host manufacturer have to consult with module manufacturer for the installation method in end system.

2.4 Limited module procedures

Not applicable

2.5 Trace antenna designs

Not applicable

2.6 RF exposure considerations

This equipment complies with FCC radiation exposure limits set forth for an uncontrolled environment. This equipment should be installed and operated with minimum distance 20cm between the radiator & your body.

2.7 Antennas

This radio transmitter FCC ID: **2ANH5RC-CC1310-915H** has been approved by Federal Communications Commission to operate with the antenna types listed below, with the maximum permissible gain indicated. Antenna types not included in this list that have a gain greater than the maximum gain indicated for any type listed are strictly prohibited for use with this device.

Antenna No.	Operate frequency band	Antenna Type	Maximum antenna gain
Antenna	902-928MHz	External antenna	1.8dBi

2.8 Label and compliance information

The final end product must be labeled in a visible area with the following" Contains FCC ID: **2ANH5RC-CC1310-915H** ".

2.9 Information on test modes and additional testing requirements

Host manufacturer is strongly recommended to confirm compliance with FCC requirements for the transmitter when the module is installed in the host.

2.10 Additional testing, Part 15 Subpart B disclaimer

Host manufacturer is responsible for compliance of the host system with module installed with all other applicable requirements for the system such as Part 15 B.

Radiocontrolli s.r.l refuses any responsibility for irregular uses of the devices and for any possible lack or inaccuracy of the data and reserves the right to change in whole or in part these information without notice.