CDG / MP3G KARAOKE PLAYER & BLUETOOTH MEDIA WITH 7 ” TFT SCREEN

Model: MET8021TFT

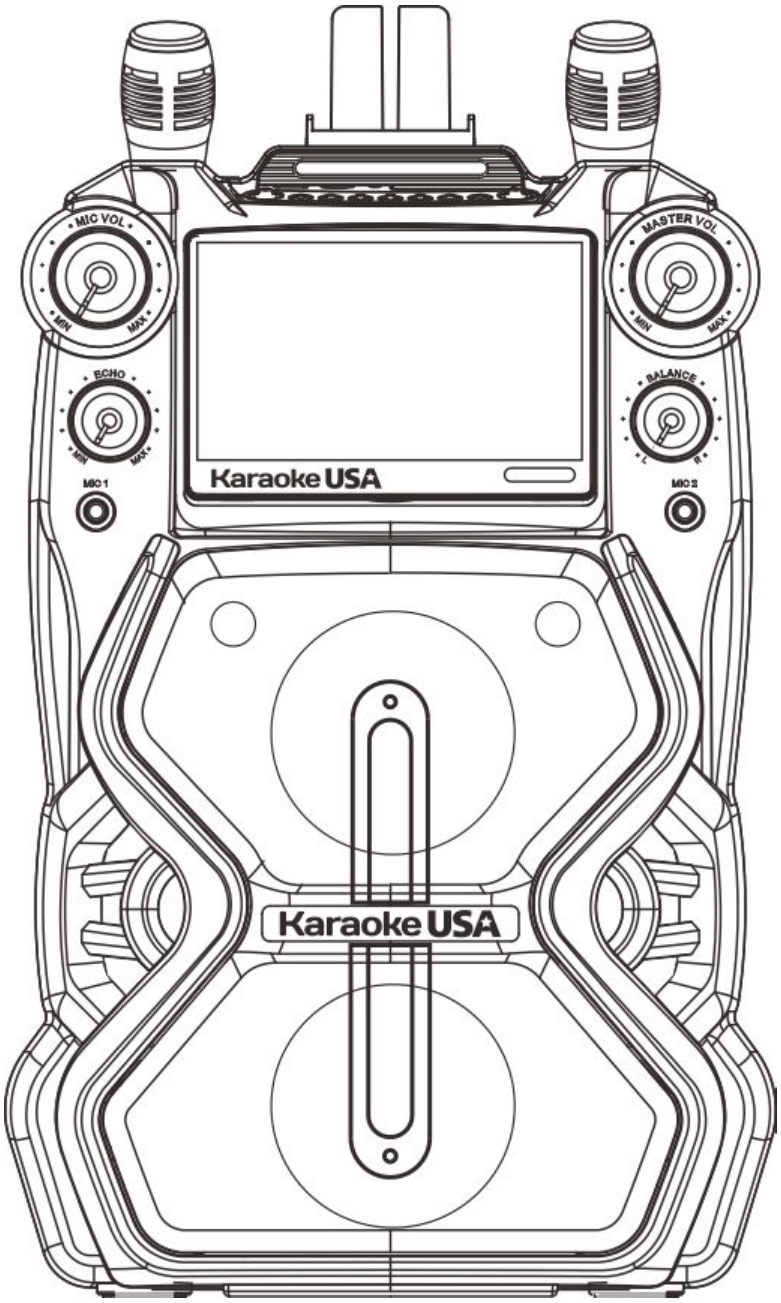

User’s Guide

PLEASE READ BEFORE OPERATING THIS EQUIPMENT

FCC Warnings

FCC ID: 2ANH7- 3938021BT

Warning: Changes or modifications to this unit not expressly approved by the party responsible for compliance could void the user's authority to operate the equipment.

Note: This equipment has been tested and found to comply with the limits for a Class B digital device, pursuant to Part 15 of the FCC Rules. These limits are designed to provide reasonable protection against harmful interference in a residential installation. This equipment generates, uses and can radiate radio frequency energy and, if not installed and used in accordance with the instructions, may cause harmful interference to radio communications. However, there is no guarantee that interference will not occur in a particular installation. If this equipment does cause harmful interference to radio or television reception, which can be determined by turning the equipment off and on, the user is encouraged to try to correct the interference by one or more of the following measures:

- Reorient or relocate the receiving antenna.
- Increase the separation between the equipment and receiver.
- Connect the equipment into an outlet on a circuit different from that to which the receiver is connected.
- Consult the dealer or an experienced radio/TV technician for help.

This equipment complies with FCC radiation exposure limits set forth for an uncontrolled environment.
This equipment should be installed and operated with minimum distance 20 cm between the radiator & your body.

This device complies with Part 15 of the FCC Rules. Operation is subject to the following two conditions:

(1) This device may not cause harmful interference, and
(2) This device must accept any interference received, including interference that may cause undesired operation.

MAIN UNIT LOCATION CONTROLS 1.1

TOP VIEW (PANEL CONTROL)

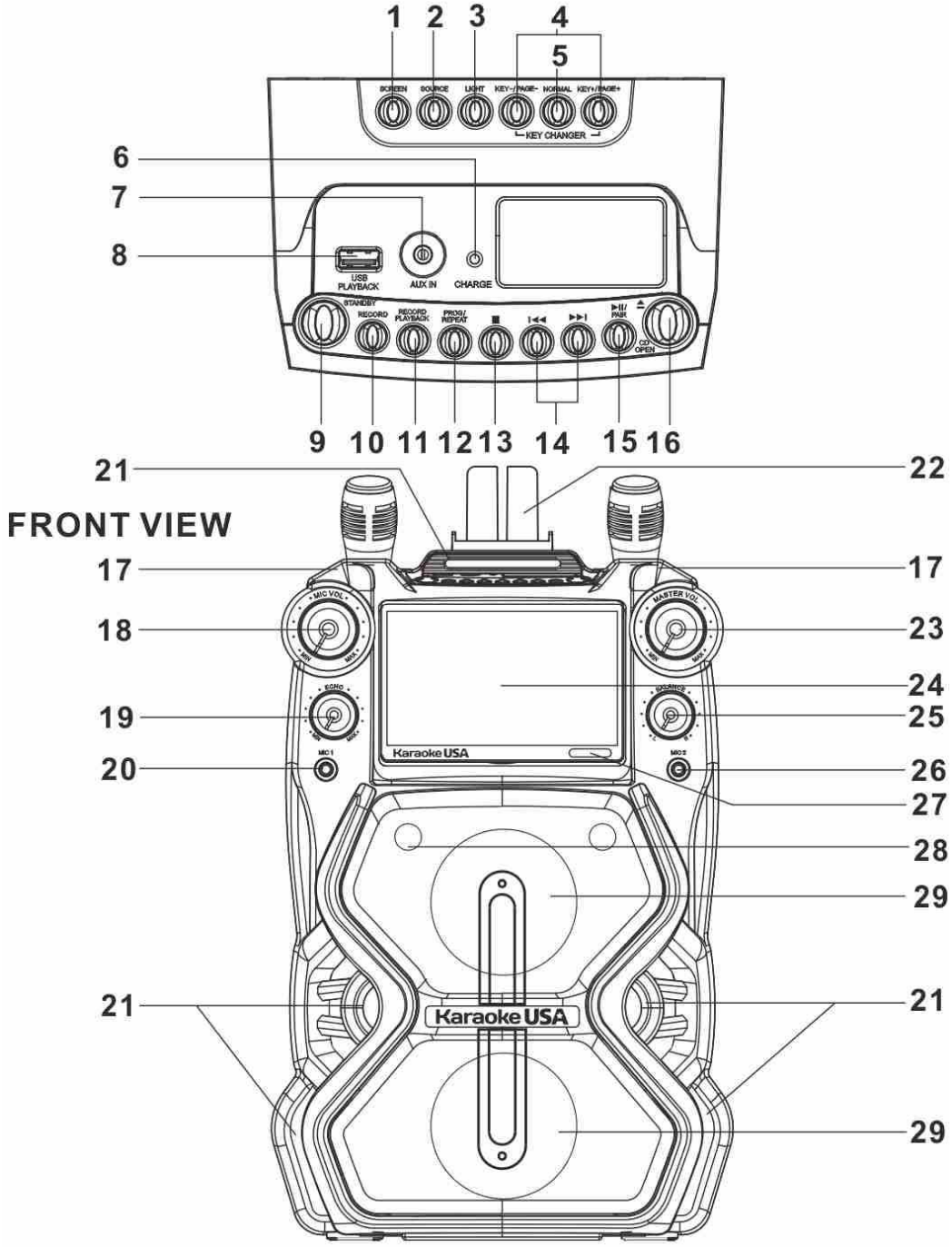

REAR VIEW

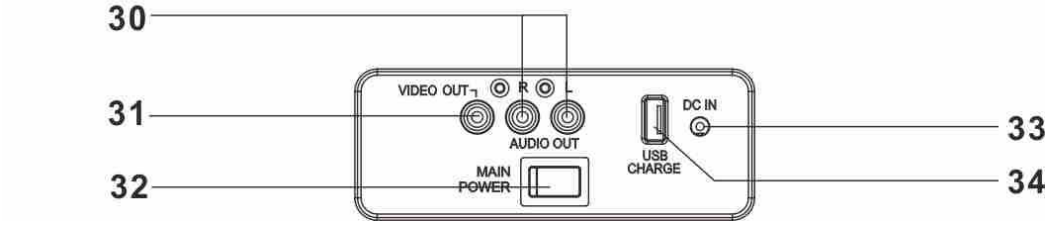

MAIN UNIT LOCATION CONTROLS 1.2

CONTROLS:

1. SCREEN Button
2. SOURCE Button
3. LIGHT Button
4. KEY CHANGER (KEY- / PAGE- or KEY+/PAGE+) Button
5. NORMAL Button
6. CHARGING Indicator
7. AUX IN Input
8. USB Port For Play Back
9. STANDBY Button
10. RECORD Button
11. RECORD PLAYBACK Button
12. PROG / REPEAT Button
13. ■ STOP Button
14. ⏮ / ⏭ SKIP/ SEARCH Button
15. ⏯ / PAIR / PLAY / PAUSE button:
16. ⏏ DISC DOOR OPEN Button
17. MICROPHONE HOLDER
18. MIC VOL Dial
19. ECHO Dial
20. MIC 1 Inputs
21. DISCO LIGHT
22. CRADLE
23. MASTER VOLUME Dial
24. TFT Display / DISC Door
25. BALANCE Button
26. MIC 2 Input
27. REMOTE SENOR
28. SPEAKER - TWEER
29. SPEAKER - Full RANGE
30. AUDIO OUT RCA Jack
31. VIDEO OUT RCA Jack
32. MAIN POWER Switch
33. DC IN Jack
34. USB Port For Charging

REMOTE LOCATION CONTROLS

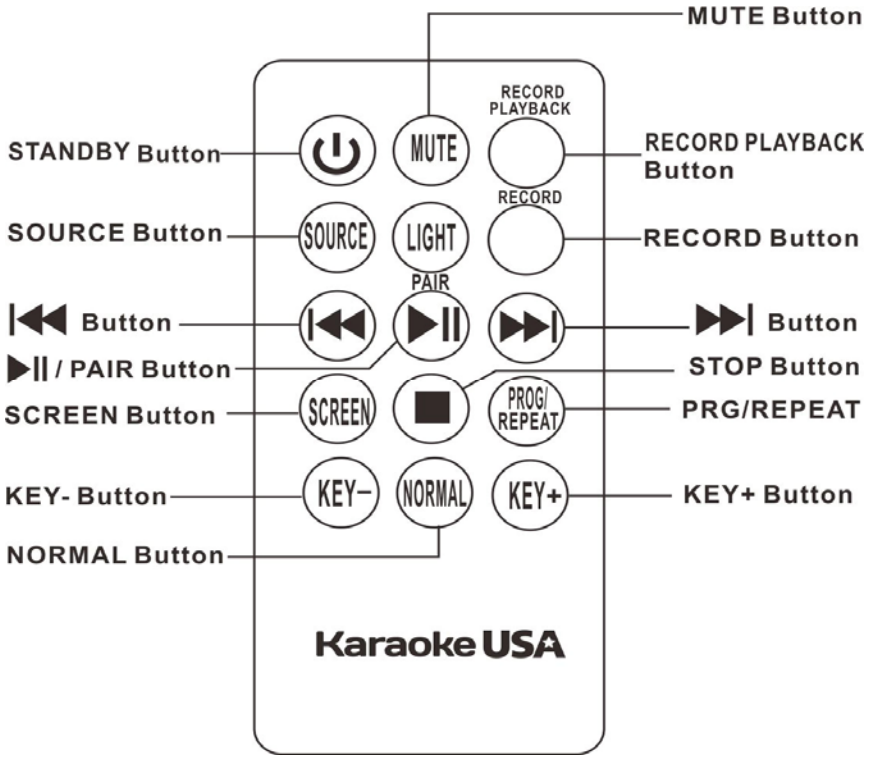

Notes:

1. Press the MUTE button of remote to mute the audio sound, press again to resume. Other button of remote same as main unit function.
2. Remove spacer tab before using this unit for first time .
3. Press the buttons of the remote to pointing the main unit remote senor area to fully control the main unit.

TO INSTALLING / REPLCING REMOTE BATTERY

1. Pull the battery door at the back of the unit as shown figure.
2. Insert the battery in the battery door with “+" positive facing up. Only CR2025 3V lithium battery should be used.
3. Insert the battery door with new battery back into the unit.

BATTERY WARNING:

1. Make sure the correct polarity of battery to be installed.
2. Make sure you dispose of batteries properly (refer to your local regulations).
3. Do not open batteries.
4. Do not dispose of batteries in fire.
5. Do not heat up batteries.
6. Do not expose batteries to water.
7. Do not charge or recharge batteries.

MONITOR MESSAGE

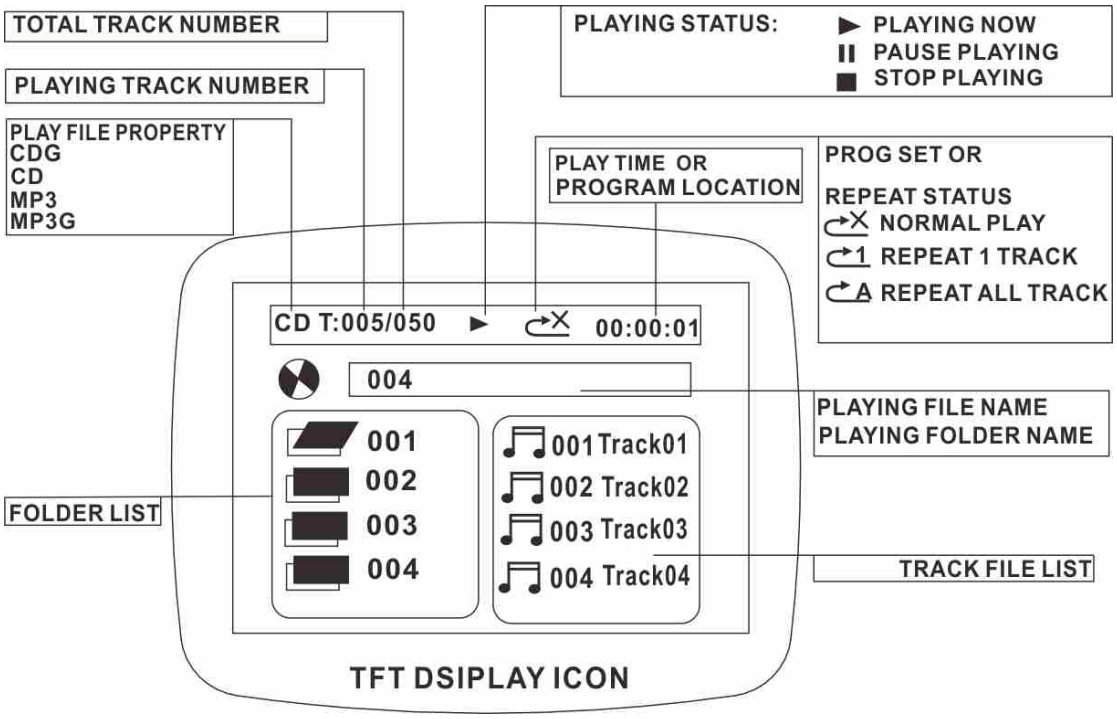

CONNECT POWER ADAPTER

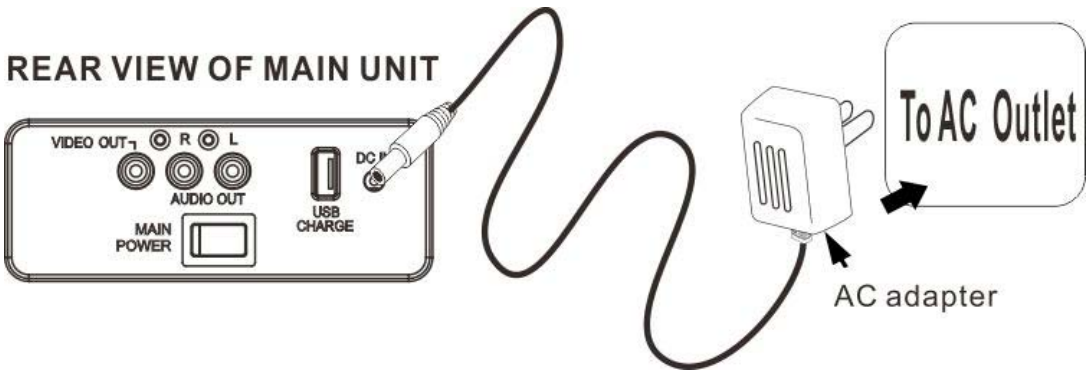

Plug the included AC adapter into the standard AC power outlet to power the unit. Connect small end to DC INPUT jack of the KARAOKE MACHINE. After adapter connection, Slide the MAIN POWER switch to ON position and press STANDBY button to turn on unit. Press the SOURCE button (unit or remote) to select USB / DISC / BLUETOOTH / AUX mode for listening.

CHARGING INTERNAL BATTERY

The KARAOKE MACHINE operates on a built-in battery that can be recharged using included adapter.

CHARGING THE BATTERY FOR FIRST TIME

1. Connect the including adapter for start charging the internal battery
2. Charge the built-in battery a minimum of 12 hours prior to first use. Plug the included adapter for charging.
3. The CHARGING indicator will light to RED color while charging and turn to GREEN color when the unit is fully charged.
4. When battery charging completed, unplug the adapter.

RECHARGING THE INTERNAL BATTERY

After prolonged use, the internal battery will become weak and the operation may become intermittent. When the internal battery charge is low, the CHARGING indicator will turn "ON" RED color and FLASH" alerting you to recharge the internal battery as soon as possible.

BATTERY WARNING:

1. Do not open batteries.
2. Do not dispose of batteries in fire.
3. Do not heat up batteries.
4. Do not expose batteries to water.

USING MICRPHONE

Requires a microphone (included I microphone) .

1. Plug the microphone (see below figure) into the MIC 1 INPUT or MIC 2 INPUT of the KARAOKE MACHINE.
2. Slide the ON /OFF switch of MICROPHONE,
3. Use the MIC VOL dial to adjust the volume of audio sound from the microphone.

FRONT VIEW OF MAIN UNIT

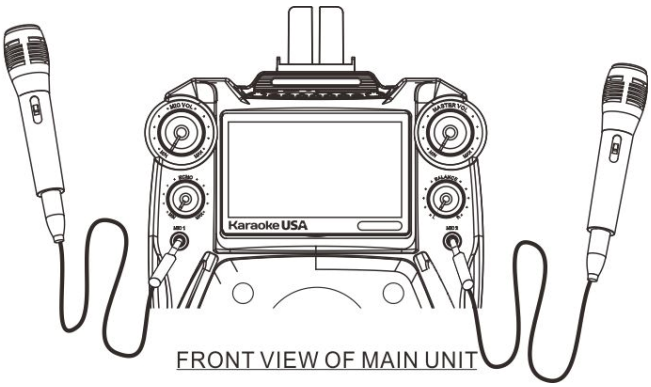

FRONT VIEW OF MAIN UNIT

CHARGING YOUR MOBILE

Require an **USB** cable to connect USB port for battery charging.

1. Plug the standard end of the USB cable into the **USB** port located on the rear of the KARAOKE MACHINE. Plug the small end of the USB cable into the device you wish to charge.
2. Observe the battery charge indicator on your device and the charging will start immediately.
3. Remove the charging cable when charging complete.

Notes:

- USB charging port supplies DC 5V output,
- USB charging port cannot support data transfer or connect to computer.
- Do not connect USB port of this unit to other external power charger USB ports or computer, it may damage both units and void the warranty.

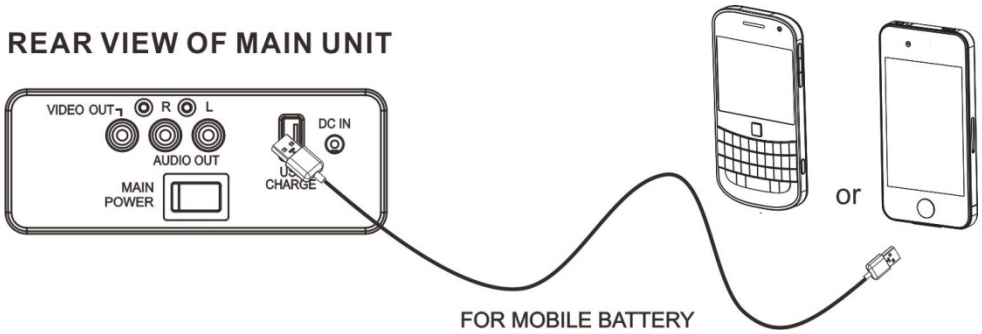

REPLACE BUILT-IN BATTERY

1. Push the POWER switch to OFF position.
2. Use screw driver to open the battery door
3. Move out the internal battery
4. Push in new battery pack into battery compartment.
5. Close the battery door.
6. Use screw driver to lock the battery door.

Notes:

- Batteries shall not be exposed to excessive heat such as sunshine, fire
- Only same or equivalent type batteries as recommend are to be used.
- Do not dispose of batteries in fire, battery may explode or leak.

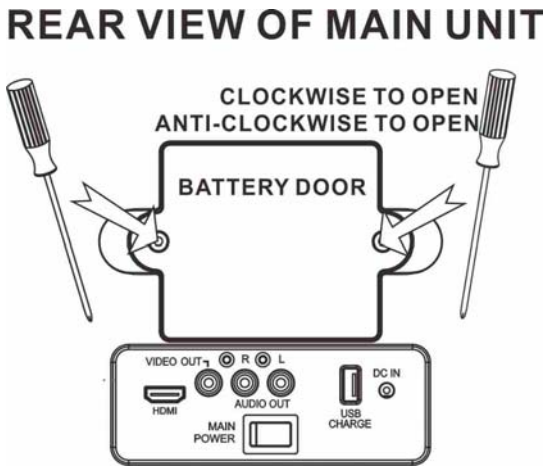

INSTALL CRADLE

INSTALL CRADLE INTO THE UNIT

Install the cradle (included) to hold the Mobile & Tablet onto unit.

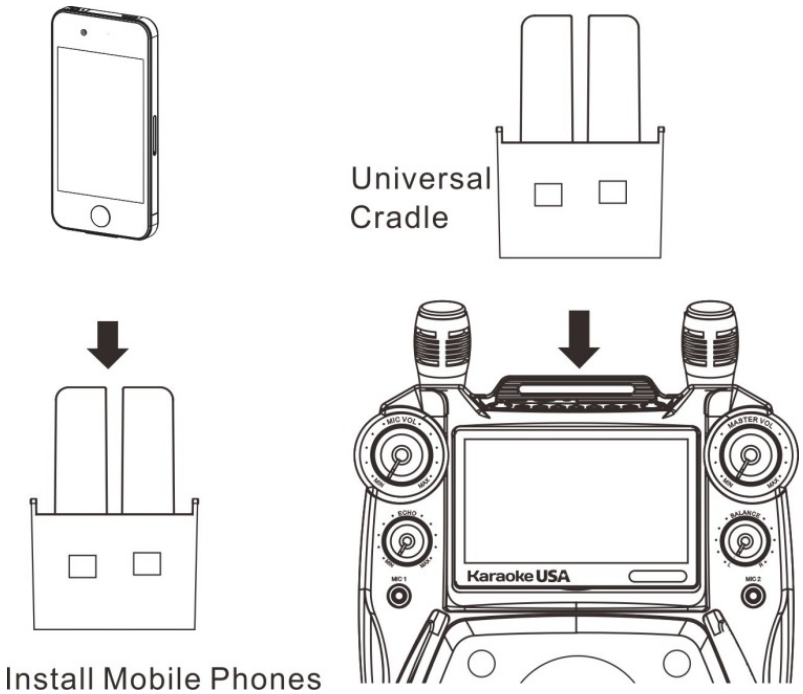

PLACE MOBILE INTO CRADLE

PLACE EXTERNAL DEVICE

Insert Personal Player / Mobile Phone / Tablet with cradle onto the unit.

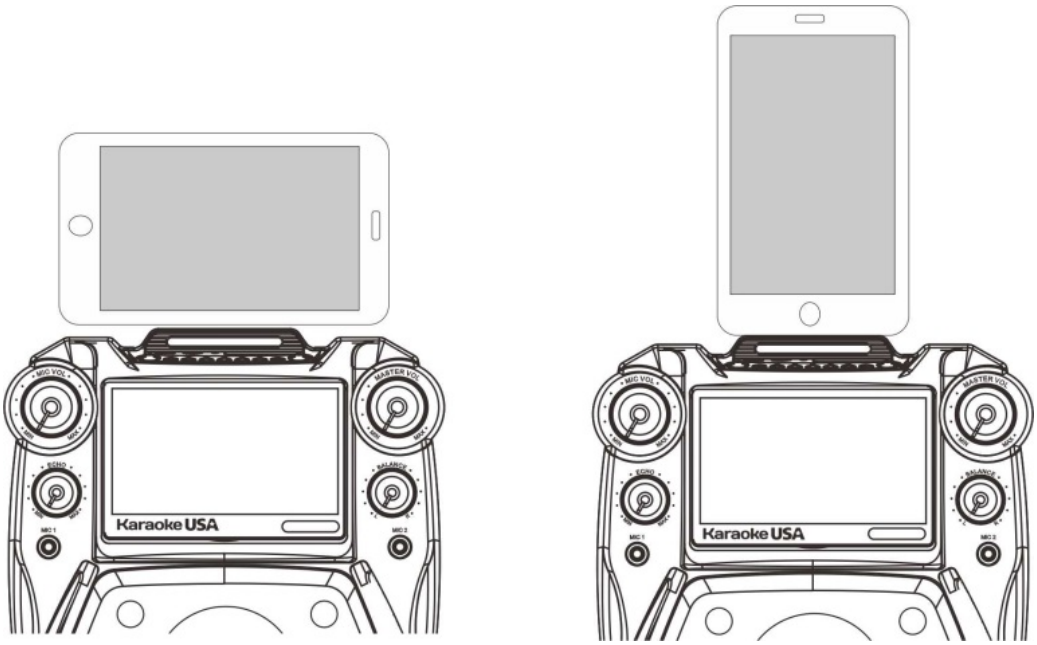

CONNECTING TO A TELEVISION / EXT. DEVICE

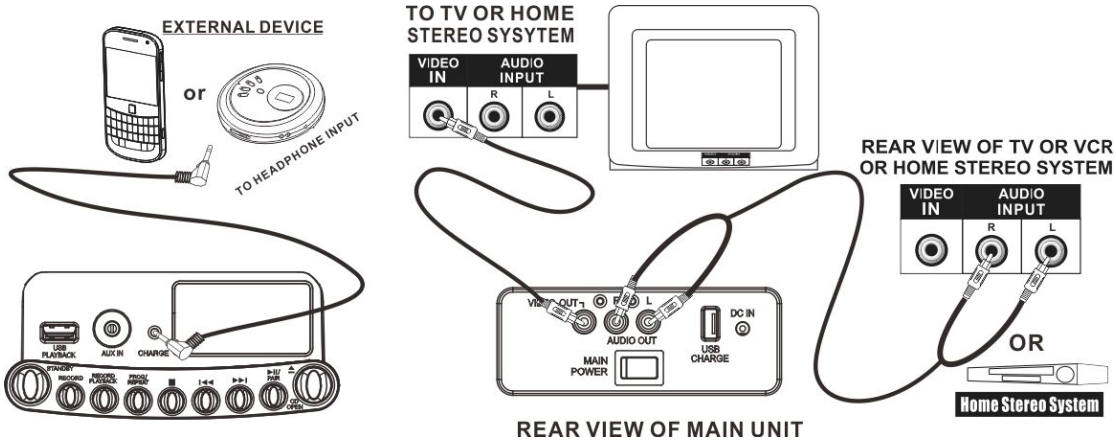

AUX IN (AUDIO IN / LINE IN)

To connect a MP3 Player or other Audio Device you will need a 3.5mm Auxiliary Cable.

1. Connect a 3.5mm Auxiliary Cable to the AUX IN jack on front of unit and to the Audio Output or Phones on the audio device you wish to play.
2. Press SOURCE button to AUX mode.
3. Turn on both units.
4. After the connection, the external device will sound from speakers of your unit

COMPOSITE VIDEO OUTPUT

1. Require an RCA video cable and plug the included RCA audio/video cable into the VIDEO OUT of the KARAOKE MACHINE and a composite video input on a television.
2. Adjust the television to the correct input setting.
3. When playing a USB (MP3+G) or CDG disc that the KARAOKE MACHINE will output written lyrics / video / image to the connected television.

RCA AUDIO OUTPUT

1. Require an RCA audio cable and plug the included RCA audio/video cable into the AUDIO OUT of the KARAOKE MACHINE and a RCA audio input on a television or stereo system.
2. Adjust the television or stereo system to the correct input setting.
3. When playing the USB / Disc / Bluetooth that the KARAOKE MACHINE will output audio to the connected television or stereo system. Use the external device to control the output sound level.

LOADING A DISC

1. Turn on POWER follow previous page **CONNECT POWER ADAPTER**
2. Press the CD DOOR OPEN AREA to open the CD DOOR.
3. Place a DISC into the CD compartment.
4. Close the CD DOOR.
5. Press the SOURCE button to select DISC mode.

Notes: This unit is designed to play CDs bearing these identification logos.

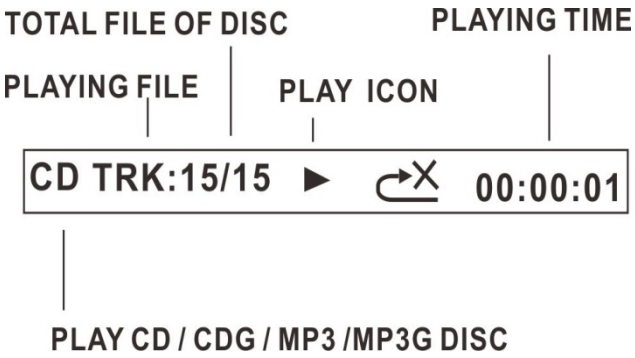

LISTENING A DISC

1. Turn on POWER and select DISC mode follow **LOADING A DISC** page.
2. Press ▶II the button to begin playing the loaded disc. The PLAY/PAUSE icon will light on display.
3. Rotate the MASTER VOLUME dial to select the sound level.
4. To temporarily stop playing, press the ▶II button once (PAUSE indicator will light). To resume play, press the ▶II button one more.
5. Press I◀◀ / ▶▶I buttons to skip between next or previous tracks.
6. Hold the I◀◀ / ▶▶I buttons to fast search through the track.

   Note:- The fast-forward / fast-rewind functions will not work for CDG discs.
7. Search Folder : In stop mode, press PAGE + / PAGE- button to search.
8. Key Control : In music playing, press PAGE + / PAGE- button to select different sound speed.
9. Connect the VIDEO OUT jack to TV, the lyrics text will show on TV.
10. Press the ■ button to stop playing.

INSTALL USB MEMORY STICK

1. Turn on POWER follow previous page **CONNECT POWER ADAPTER**
2. Plug the USB memory stick to USB input jack (on control panel of main unit).
3. Press the SOURCE button to USB mode. The USB playback start.

Notes: The system is able to decode and playback MP3 OR MP3+G files which are stored in the memory media of your USB thumb drive.

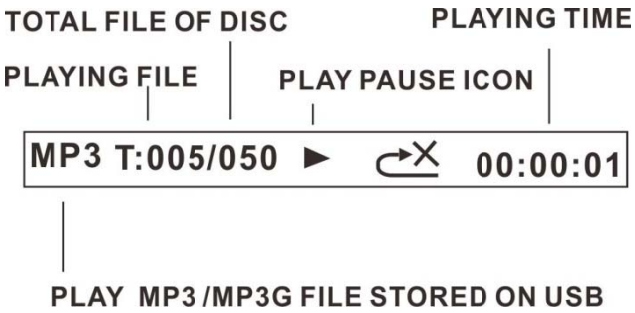

LISTENING USB MUSIC FILE

1. Turn on POWER follow previous page **INSTASLL USB MEMORY STICK.**
2. After install USB, the unit will be start play automatically.
3. If unit not start play, press the ▶II PLAY/ PAUSE button to begin playing the loaded USB. Rotate the MASTER VOLUME dial to select sound level.
4. To temporarily stop playing, press the ▶II button once to pause mode. To resume play, press the ▶II button again.
5. Press I◀◀ / ▶▶I buttons to skip between next or previous tracks.
6. Hold the I◀◀ / ▶▶I buttons to fast search through the track.

   Note:- The fast-forward / fast-rewind functions will not work for MP3G file.
7. Search Folder : In stop mode, press PAGE + / PAGE- button to search.
8. Key Control : In music playing, press PAGE + / PAGE- button to select different sound speed.
9. Connect the VIDEO OUT jack to TV, the lyrics text will show on TV.
10. Press the ■ button to stop playing.

USING REPEAT / PROGRAM

REPEAT FUNCTION

When play music on USB / DISC mode of the KARAOKE MACHINE.

1. To repeat the current track: Press the REPEAT button until the 1 icon will show on the display. The track will continue to play .
2. To repeat all the tracks: Pressing the REPEAT button until the A icon show in the monitor. All the tracks on the disc will be played repeatedly.
3. To clear the repeat function: Press the REPEAT button until the icon show in the monitor.

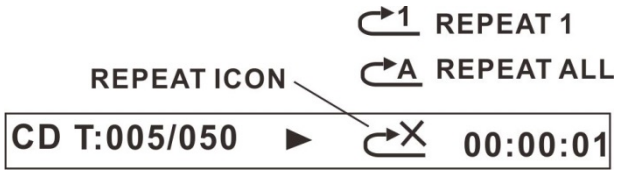

PROGRAM FUNCTION

When play music on USB / DISC mode of the KARAOKE MACHINE.

1. Press the ■ button once to stop playing / on stop mode.
2. Press the PROGRAM button. The PROGRAM (PROG) SET 01:01 will show in the monitor, the track number “- -“ digits are flashing.
3. If necessary, press the PAGE+/ PAGE- button to select folder.
4. Press the ⏮/⏭ button to select a desired track.
5. Press PROGRAM button to confirm entry.
6. You can repeat the steps 3-5 up to a maximum of 20 tracks. When maximum of 20 tracks have been programmed, “PROG FULL” message appears briefly in the monitor.
7. When you have completed programming and press ▶II button to start playing.
8. Press ■ button twice or open the CD DOOR to clear all the programmed entries.

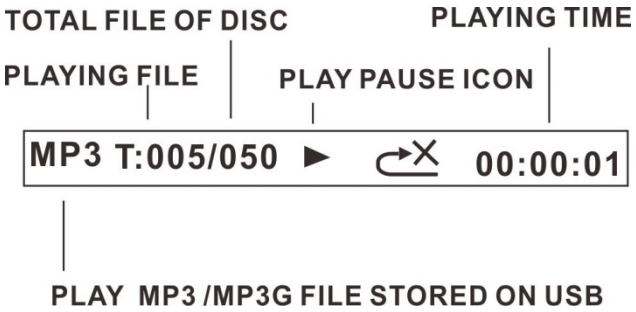

USING BULETOOTH

Connecting Bluetooth to your Smartphone I Tablet

1. Press the POWER button to turn on unit.
2. On your smartphone / Tablet, turn on Bluetooth and enable device scanning.
3. When MET-8021 shows on the Bluetooth scan, select it to connect it to your device.
4. When both devices are successfully connected, you are ready to play music wirelessly from your device.
5. Press the PLAY button of the KARAOKE MACHINE or external Bluetooth device to start music playback.
6. Press the ⏮ / ⏭ button of the KARAOKE MACHINE next / previous of external Bluetooth device to switch between music tracks.
7. Hold the PAIR button to reconnect other Bluetooth device.

Notes: When your unit playing mobile music by Bluetooth and receiving an incoming call on your mobile phone, the music will be stop and ring sound from your mobile phone. Just end the call that the music will sound automatic.

DISCO LIGHT

When unit turn on, the disco light will show on speaker panel. Press the LIGHT button to turn on /off the disco light show.

USING ECHO

Turn on KARAOKE MACHINE and connect microphone. Adjust the ECHO knob of KARAOKE MACHINE to enhance your voice for a concert hall effect.

USING BALANCE

Turn on the KARAOKE MACHINE and play the MP3G file / CDG disc music. Rotate the BALANCE knob to hear the music and vocals or to hear the music only.

NOTE: To use the BALANCE function, a CD+G disc MP3G file must be used. Otherwise it will operate as a standard BALANCE control.

USING THE RECORDING

This unit can record the unit music sound to USB from DISC / BLUETOOTH / AUX mode.

1. Turn on POWER follow previous page **INSTASLL USB MEMORY STICK.**
2. Follow below step to use recording.

Using recording from CD :

a. Place the CD disc on CD compartment.
b. Press SOURCE button to DISC mode.
c. Press ⏮ / ⏭ or **PAGE +/ PAGE-** button to search special track.
d. Press the ▶II button to start play.
e. Finally, press the RECORD button to start recording. Press the button again to stop the recording.

Using recording from BLUETOOTH :

a. Press SOURCE button to BLUETOOTH mode.
b. Connect the Bluetooth to external device.
c. Press the ▶II button to start play.
d. Finally, press the RECORD button to start recording. Press the button again to stop the recording.

Using recording from AUX :

a. Press SOURCE button to AUX mode.
b. Start play the external device.
c. Finally, press the RECORD button to start recording. Press the button again to stop the recording.

Note: Make sure the USB enough memory for all recording

Recall the recording file from USB

Turn on POWER follow previous page **INSTASLL USB MEMORY STICK.**

Press SOURCE button to select USB mode

Press RECORD PLAYBACK button to start playback recorded file.

If more file show on display, press ⏮ / ⏭ button to select different file.

SPECIFICATION

AC Power Adapter Connect to DC Jack	**Use included adapter** **AC Input : 120-240V , 50 / 60 Hz ,** **DC Output : 12V ,** 2500 **mA**
Built-In battery	**11.1V 2200 mAh**
DC Input	**DC 12V ,** 2500 **mA**
USB Input Jack (Top View)	**Support 32GB memory**
USB Port (Rear View)	**For battery charging of external mobile** **5V, 1000mA**
Disc Player	**Support CDs / CDG / MP3+G/ MP3**
Bluetooth	Support music share from mobile
Master Power Output	**Full Range 4W x 2** RMS **Tweeter 4W x 2** RMS
Full Range Speakers Spec	**4 Inch, 6 Watt , 4 Ohm x 2 pcs**
Tweeter Speakers Spec	**4 Inch, 6 Watt , 4 Ohm x 2 pcs**

Specifications are typical, individual units might vary. They are subject to continuous improvement without notice and without incurring any obligation.