MET

MODEL NO. MET1339

2.1 BLUETOOTH SPEAKER SYSTEM

INSTRUCTION MANUAL

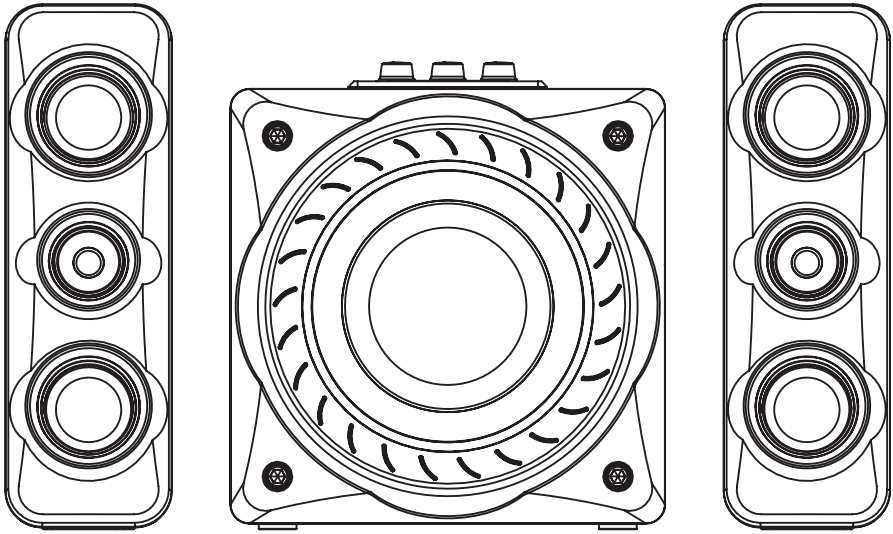

PLEASE READ BEFORE OPERATING THIS EQUIPMENT

Important Safety Instructions

1. Read these instructions.
2. Keep these instructions.
3. Heed all warnings.
4. Follow all instructions.
5. Do not use this apparatus near water.
6. Clean only with dry cloth.
7. Do not block any ventilation openings. Install in accordance with the manufacturer's instructions.
8. Do not install near any heat sources such as radiators, heat registers, stoves,or other apparatus (including amplifiers) that produce heat.
9. Do not defeat the safely purpose of the polarized or grounding-type plug. A polarized plug has two blades with one wider than the other, A grounding type plug has two blades and a third grounding prong. The wide blade or the third prong are provided for your safety. If the provided plug does not fit into your outlet, consult an electrician for replacement of the obsolete outlet.
10. Protect the power cord from being walked on or pinched particularly at plugs, convenience receptacles, and the point where they exit from the apparatus.
11. Only use attachments/accessories specified by the manufacturer.
12. Use only with the cart, stand, tripod, bracket, or table specified by the manufacturer, or sold with the apparatus, When a cart is used, use caution when moving the cart/apparatus combination to avoid injury form tip-over.

13. Unplug this apparatus during lightning storms or when unused for long periods of time.
14. Refer all servicing to qualified service personnel. Servicing is required when the apparatus has been damaged in any way, such as power-supply cord or plug is damaged, liquid has been spilled or objects have fallen into the apparatus, the apparatus has been exposed to rain or moisture, does not operate normally, or has been dropped.

Warning: Changes or modifications to this unit not expressly approved by the party responsible for compliance could void the user's authority to operate the equipment.

Do not mix old and new batteries.
Do not mix alkaline, standard (carbon-zinc), or rechargeable (ni-cad, ni-mh, etc) batteries.

NOTE: This equipment has been tested and found to comply with the limits for a Class B digital device, pursuant to Part 15 of the FCC Rules. These limits are designed to provide reasonable protection against harmful interference in a residential installation. This equipment generates, uses, and can radiate radio frequency energy and, if not installed and used in accordance with the instructions, may cause harmful interference to radio communications. However, there is no guarantee that interference will not occur in a particular installation. If this equipment does cause harmful interference to radio or television reception, which can be determined by turning the equipment off and on, the user is encouraged to try to correct the interference by one or more of the following measures:

- Reorient or relocate the receiving antenna.
- Increase the separation between the equipment and receiver.
- Connect the equipment into an outlet on a circuit different from that to which the receiver is connected.
- Consult the dealer or an experienced radio/TV technician for help.

LOCATION OF CONTROLS

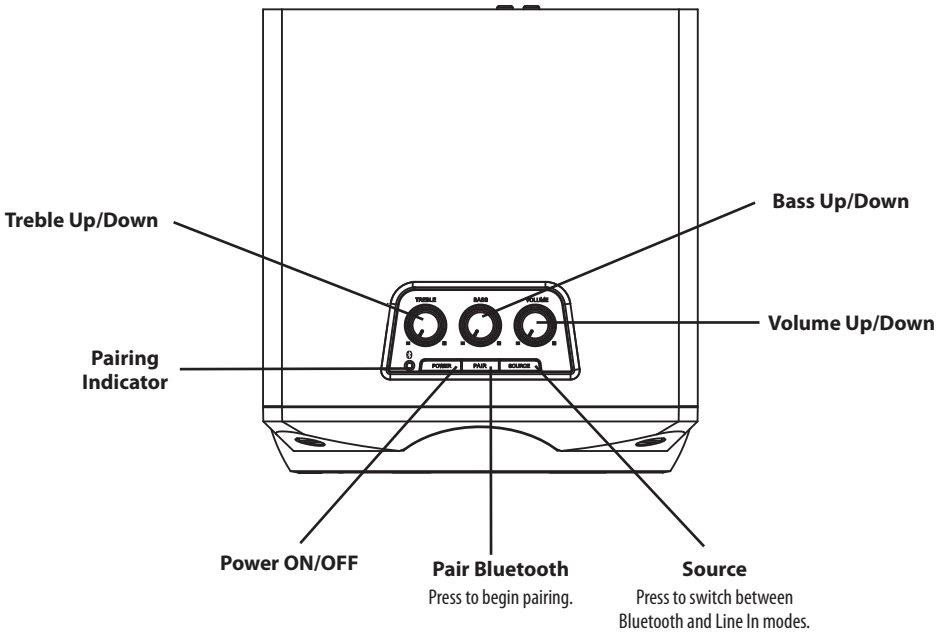

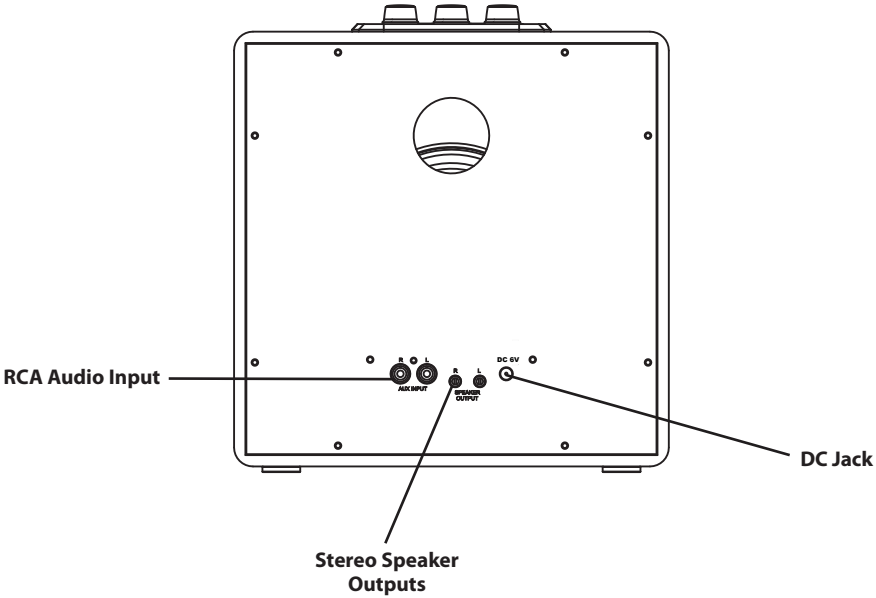

Power

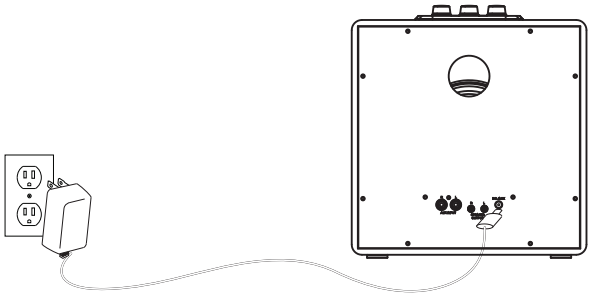

Plug the included AC/DC Switching adapter (Input:100-240V~ 50/60Hz) into the POWER JACK on the dock and an AC power outlet to power the dock.

Bluetooth Wireless Audio

Pairing to a Device & Playing Audio

After initial pairing, the unit will stay paired unless unpaired manually by the user or erased due to a reset of the device. If your device should become unpaired or you find it is unable to connect, repeat the steps listed here.

1. Power ON the unit and press the **Source** button to switch to **Bluetooth wireless mode.**
2. Press the **Pair button** to begin pairing. The **pairing indicator** will begin quickly flashing blue. *When pairing, remain within 3 feet of the unit.*
3. Using the controls on your Bluetooth device, search for and select **SHTIB1060-BT** in your Bluetooth settings to pair. If your device requests a password, enter the default password **0 0 0 0** . *Refer to the user's manual for your specific device for instructions on pairing and connecting Bluetooth devices.*
4. When successfully paired, the **pairing indicator** will turn solid blue. Use the controls on the connected device to select and play audio.

Audio Source & Speaker Connections
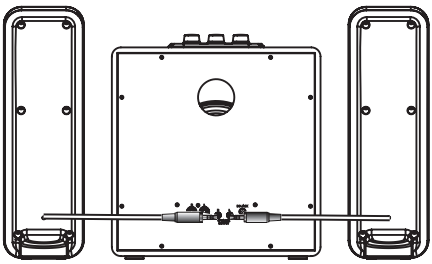
1. Using a 3.5mm to RCA cable (included), connect the **RCA audio inputs** to the **audio output** of an external audio source or system.
2. Connect the left and right speaker cables to the left and right **speaker outputs** on the subwoofer.
3. To play audio from the connected external source, press the **Source** button to switch to **Line In mode.** Audio from the connected source will now be heard through the speakers.