maxwest

USER MANUAL

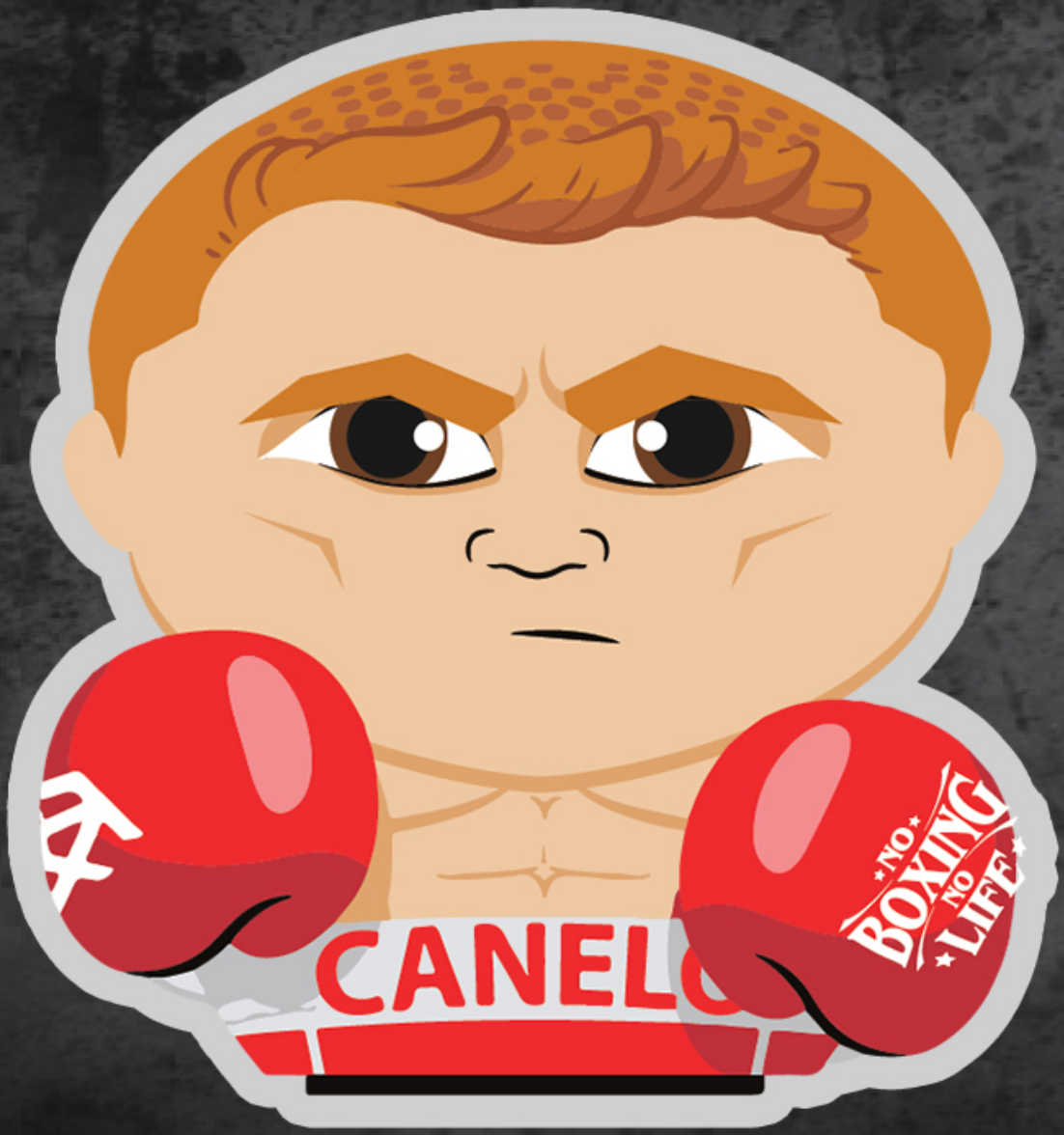

THE MINI CHAMP™

MINI CHAMP - LAYOUT

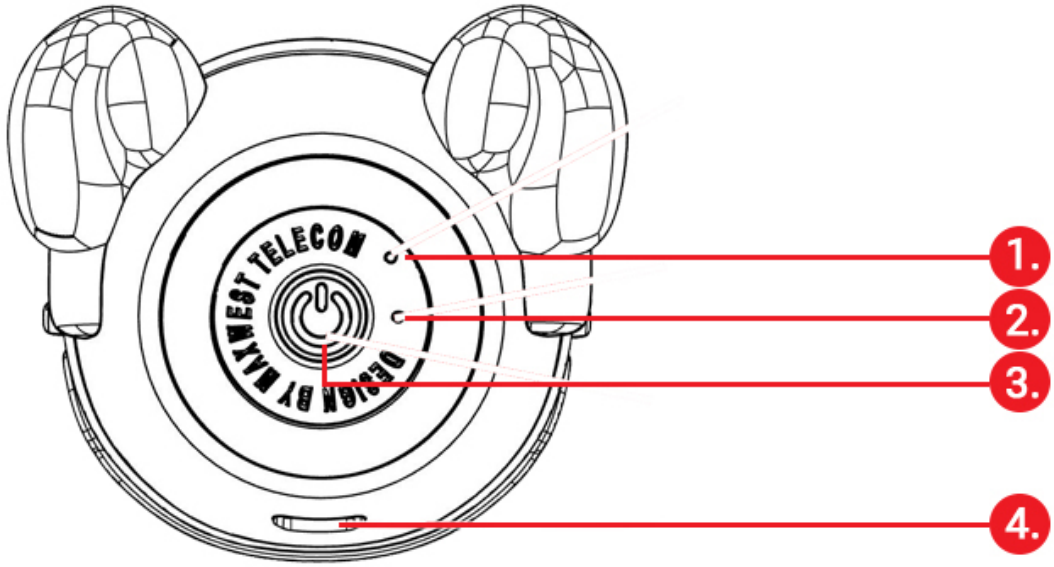

1. Microphone
2. LED Light
3. Power Button
   Play/Pause Button
4. Charging USB Port

Instructions - Power Button

1. Turn On/Off Mini Champ by Pressing the ⏻ for 2 seconds.
2. Play/Pause by Pressing the ⏻ button.
3. Answer/End Phone Calls by Pressing the ⏻ button.

Specifications

- Output power : 3Ω / 3W
- Amplifier : 5W
- Sensibility : ≥ 85 dB
- Battery : 400 mAh / 3.7V
- Charging Voltage : DC 5V/1A

Bluetooth Pairing

1. Power on The Mini Champ by Pressing the ⏻ for 2 seconds.
2. Speaker will notify it is ready to be paired.
3. On your device, open the bluetooth menu and search for **"Mini Champ"**
4. Once connected the speaker will notify it has been connected.

Connect Two Mini Champs

1. Power on both Mini Champs without connecting to your device.
2. Press the ⏻ button two (2) times on both units.
   [Units must be in close proximity of each other, less then 1m.]
3. A ringing sound will appear when units are in TWS mode.
4. Once connected the speaker will notify it has been connected.
5. Once Paired, on your device only one speaker will appear; but the audio will be be heard in both speakers

Charging Speaker

1. Insert the Micro USB cable into the rear port of the speaker
2. Plug in the USB port of the cable to USB power souce (Not included)
3. LED light will stay Red while charging
4. LED light will start to blink when it is fully charged.

Change Language

1. Power on The Mini Champ by Pressing the ⏻ for 2 seconds.
2. Make sure the Mini Champ is not be paired to a device.
3. Press the ⏻ button 3 times.
4. Language will change to English or Spanish

Warning

Any changes or modifications not expressly approved by the party responsible for compliance could void the user ’ s authority to operate the e quipment.

This device complies with part 15 of the FCC Rules. Operation is subject to the following two conditions:
(1)this device may not cause interference
(2)this device must accept any interference, including interference that may cause undesired operation of the device.

Note: This equipment has been tested and found to comply with the limits for a Class B digital device, pursuant to part 15 of the FCC rules. These limits are designed to provide reasonable protection against harmful interference in a residential installation.This equipment generates, uses and can radiate radio frequency energy and, if not installed and used in accordance with the instructions, may cause harmful interference to radio communications. However, there is no guarantee taht interference will not occur in a particular installation If this equipment does cause harmful interference to radio or televsion reception, which can be determined by turning the equipment off and on, the user is encouraged to try to correct the interference by one or more of the following measures:
-Reorient or relocate the receiving antenna.
-Increase the separation between the equipment and receiver.
-Connect the equipment into an outlet an a circuit different from that to which the receiver is connected.

-Consult the dealer or an experienced radio/TV technician for help.

FCC Radiation Exposure Statement:
This equipment complies with FCC radiation exposure limits set forth for an uncontrolled environment.

WWW.MAXWESTTELECOM.COM

@2021 MAXWEST TELECOM
©TM 2021 LIBERTY MOBILE INC
- ALL RIGHTS RESERVED -