MAXWEST MX-BT3S | BT Portable Speaker USER GUIDE

To ensure correct operation and avoid damage, please read this user manual carefully before using this product.

FEATURES:
1.Output very clear sound and dynamic sound effect
2.TWS function, pair two speakers together wirelessly to experience true stereo sound
3.With A2DP Bluetooth, wireless stream music from any Bluetooth-enabled device such as your mobile phone, notebook, iPhone or iPad
4.RGB lighting
5.Secure simple pairing for user-friendly operating
6.10 meters operating range
7.USB support
8.FM radio
9.Line-in function, suitable for PC, MID, TV and other audio devices
10.Built-in lithium rechargeable battery 1500mAh
11.Carry Handle, easy to take out

SPECIFICATIONS:
Bluetooth version: V5.0+BR+EDR
Speaker Size: 3 inch
Output: 8.5W, 4Ω
Battery Capacity: 1500mAh
Frequency Response: 120Hz-15kHz
Playtime at max volume: 1.5H
Product size: 278(L) *117W) *156(H) mm

ACCESSORIES:
Charging cable, Audio cable, User Manual

PRODUCT DETAILS:

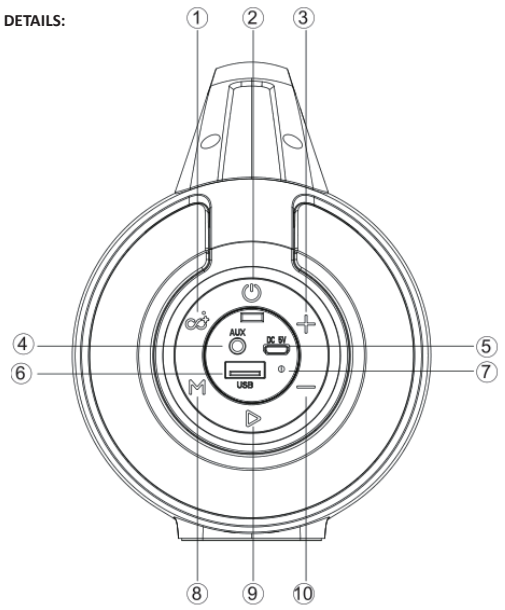

1.TWS button	2. Power On/Off	3. Forward/Volume Up
4. AUX IN	5.Charging Jack	6.USB Port
7.LED Indicator	8.Mode Button	
9.Play/Pause Button	10.Backward/Volume down	

Bluetooth:
1.Turn the power button to “ON”, the RGB light turn on automatically, the LED light turn blue and blink quickly, then enter Bluetooth mode and make a tone “Bluetooth Device Ready To Pair”.
2.Activate Bluetooth of mobile phone and search for device name “MX-BT3S” then connect it. The blue LED light blink slowly and make a tone “Bluetooth Device Connected Successfully” once connected.
3. Play the music from your mobile phone and enjoy.
4. Long press Forward or Backward button on the device or operate on Mobile phones to select songs you like.
5. Press Play/Pause button on the device or on Mobile phones to play/pause the music.
6. Short press Forward or Backward button to adjust volume up and down. Or adjust the mobile phones’ volume.

Playing music from USB disk:
1.Turn the Power button to “ON”, the RGB light turn on automatically.
2.Insert USB flash disk into slot, the speaker will make a tone “Music Play Mode”, and play the stored music automatically.
3.Under playing mode, long press Forward or Backward button to select songs you like, short press to adjust the volume up and down.
4.Press Play/Pause to play or pause.

Remark: Under Bluetooth playing mode, insert USB disk will disconnect the Bluetooth and switch to play the USB disk. You can press the MODE button to switch to Bluetooth mode again.

FM Radio:
1.Under FM radio state, the audio cable provided treat as antenna. Please Insert the audio cable to get best FM signal before using.
2.Turn the power button to “ON”, press the “MODE” button, the speaker will prompt “The Radio Mode” when entering FM state.
3.Under playing mode, short press “Play/Pause” button to mute the speaker, long press “Play/Pause” button to auto search the FM Channel and store it automatically.
4.Long-press Forward or Backward button to change the stored FM channel.

AUX-IN:
For other compatible music devices or your MP3/MP4 players, use the supplied audio line cable to connect from the device’s “Line Out” to the “Aux In” of this device to Enjoy playing music.
Under any playing mode ,When you use the audio cable to connect the device, it will auto-switch to the AUX mode.
Under AUX mode, all functions can be controlled by external device.

Remarks:
1. When an audio cable is connected to the device, you can not switch to Bluetooth mode by pressing the Mode button.
2. When an audio cable is connected to the device, you can press “TWS” button to make TWS connection under AUX mode.

TWS Function:
1.Turn on two identical speakers you want to pair, both under BT mode. Only need to set up one of the two units.
2.Press “TWS” button, speaker will make a tone “di” to start pairing, and make “di” voice for 3 times once successfully paired.
3.Make Bluetooth connection with your mobile phone to play music by the two paired Speakers to create more powerful surround sound effect.
4.When you want to exit the TWS mode, press “TWS” button again to exit the TWS function.
5.Once two units paired with TWS, when they both are turned on next time within effective range, they can be automatically paired again(When two units TWS connected, if you manually operate to disconnect the TWS connection, next time when you turn on the two units, they will not automatically paired again).

Remark: Under Bluetooth TWS mode, if you connect your mobile phone to the unit (you operated“TWS” button at beginning) via an audio cable, it will start to play AUX via TWS function.

Remarks:
1.To turn the RGB light on/off, please long press the Mode button.
2.When the speaker Bluetooth connected with one mobile device, user can long press the TWS button to disconnect the previous device, then make Bluetooth connection with another mobile device.
3.Default volume is at 50% status of max volume.
4.When battery voltage low, the speaker will prompt “Battery Is Low, Please Recharge In Time”.

How to charge:
1.The charger is not included in the accessories. Please use a standard 5V/1~2A charger to charge this device, and we are not responsible for any damage caused by using other charger.
2.Power off the unit, put the provided charge cable into the charge slot of unit, connect the other end to PC or other charger with 5V output.
3.Charge time should be 2-4 hours. The light is red while charging, and the indicator light will switch off when full charged.
4.In order to prolong the life of battery, please do not charge more than 8 hours.
5.The unit does not have power bank function, it is forbidden to charge other device via this unit or to connect other device via a USB cable.

IMPORTANT:
When playing music during charging, please put the volume to middle, because for some music with heavy bass, the charger may not be able to afford the high current temporarily under the maximum volume.

Warning
Any changes or modifications not expressly approved by the party responsible for compliance could void the user’s authority to operate the equipment.

This device complies with part 15 of the FCC Rules. Operation is subject to the following two conditions:
(1)this device may not cause harmful interference
(2)this device must accept any interference received, including interference that may cause undesired operation.

Note: This equipment has been tested and found to comply with the limits for a Class B digital device, pursuant to part 15 of the FCC rules. These limits are designed to provide reasonable protection against harmful interference in a residential installation. This equipment generates, uses and can radiate radio frequency energy and, if not installed and used in accordance with the instructions, may cause harmful interference to radio communications. However, there is no guarantee that interference will not occur in a particular installation If this equipment does cause harmful interference to radio or television reception, which can be determined by turning the equipment off and on, the user is encouraged to try to correct the interference by one or more of the following measures:
-Reorient or relocate the receiving antenna.
-Increase the separation between the equipment and receiver.
-Connect the equipment into an outlet a circuit different from that to which the receiver is connected.
-Consult the dealer or an experienced radio/TV technician for help.

FCC Radiation Exposure Statement:
This equipment complies with FCC radiation exposure limits set forth for an uncontrolled environment.