CD Player

USER MANUAL-EN

Notice!!!

Please remove the protect paper from the CD Player before turning on the CD Player, otherwise, you will destroy the device !!!

KC-806

CE FC RoHS

WARNING

1. Never play a cracked CD or a CD is NOT clean, that would damage the laser.
2. Please remove the protection paper CD from the CD Player before powering on, otherwise, the laser could be damaged.
3. Never touch the laser of the device. Always use the dust cover to prevent dust from collecting on the laser.
4. If the device is unable to scan discs properly, use a standard commercially available cleaner to clean the laser optics. Other cleaning methods may damage the laser optics.

Accessories:

1. CD player x 1
2. 5V-2A USB adaptor x 1
3. Remote control x 1
4. User manual x 1
5. Type-C Power cord x 1

Specifications:

1. CD format support: CD,CD-R,CD-RW,MP3,WMA.
2. FM Radio Range: 76.0MHz-108.0MHz
3. Speaker: 40mm X 2
4. Rated impedance: 4Ω
5. Speaker output: 3W x 2
6. Power supply: AC100-240V, 50Hz/60Hz
7. Power/Switch cable length: 1 m
8. Dimension of main unit/package: 189x189x69mm/207x215x77mm
9. Net weight/Gross weight: 520g/900g
10. Color: white/blue/pink/black

Main Features:

1. LED screen display
2. USB flash reading/playing
3. Full-band FM radio
4. Bluetooth V5.0
5. Standard 3.5mm audio input/output port
6. Loop Playback modes: Repeat One, Repeat All, Shuffle, Normal
7. Support A-B repeat
8. Support scheduled shutdown

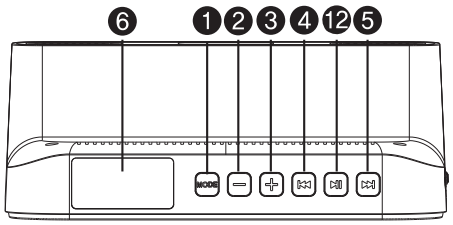

1. Mode switch
2. Volume-
3. Volume+
4. Prev
5. Next
6. LED screen
7. CD lid
8. Loudspeaker
9. POWER ON/OFF
10. USB port
11. AUX port
12. Play/Pause
13. DC-5V IN

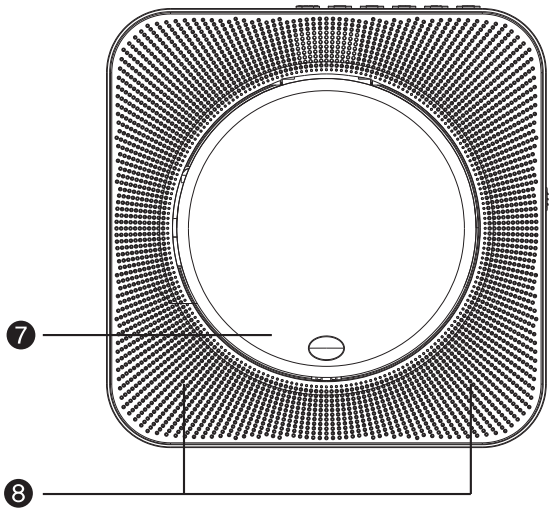

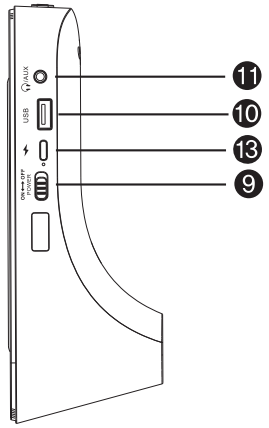

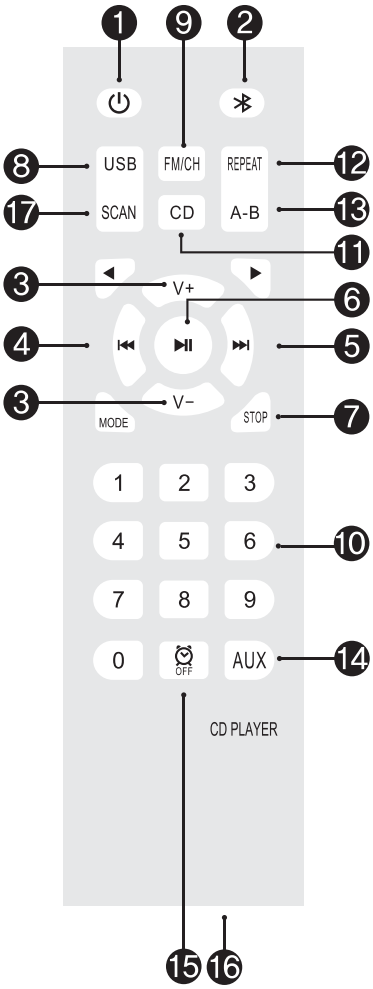

1. ON/OFF
2. Bluetooth mode
3. Volume +/-
4. Prev
5. Next
6. Play/Pause
7. Stop playing
8. USB mode
9. FM/Searching
10. Selection digital area
11. CD mode
12. Normal / Repeat One / Repeat All / Shuffle
13. A-B Repeat
14. AUX mode
15. Time / Alarm clock
16. Battery

Bluetooth transmission

1. Insert a disc that conforms to the format and short press the mode switch button to enter the CDMode (default is CD mode) to start playing.

2. Turn on the headset that needs to receive Bluetooth signals, and press and hold the Bluetooth mode button of the remote control for three seconds until the Bluetooth icon player on the CD LED display flashes, and the CD player enters Bluetooth Transfer method.

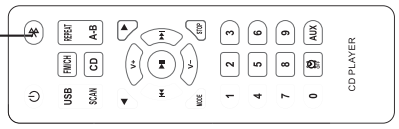

3. When the Bluetooth icon on the LED display of the CD player no longer flashes but is always onBluetooth pairing succeeded.

Note: It is best not to turn on other Bluetooth devices within ten meters during pairingIf the pairing is unsuccessful, please check if there are other Bluetooth devices within ten meters Open.

Basic Operation

1. Plug in the power cable to the USB adaptor.
2. Remove the protection paper CD from the CD Player before powering on, otherwise, the laser could be damaged.
3. Put a CD into the CD Player.
4. Press the ON/OFF button to power on, and then it will play the CD in 5-12s.
5. Press the topside “MODE” button to switch among 5 modes: “CD”, “USB”, “Bluetooth”, “FM” and "AUX" .

Power On/Off Instructions

1. Power On
Press the ON/OFF button to Power on the CD Player, the CD Player will play the CD automatically (the Compact Disk must be inserted to the CD Player before turn on).
2. Power off
Press the ON/OFF button again to Power off the CD Player. Please do not touch the Compact Disk before turn off the device.

CD Mode Instructions

Press the CD button on the remote to switch to CD mode or switch the “Mode” key(on the device) to CD mode, then the Compact Disk will run automatically and its indicator light color will change to blue, the CD icon will appear on the screen.

Bluetooth Mode Instructions

1. Press Bluetooth button on the remote to switch to Bluetooth mode or switch the “Mode” key (on the device) to the Bluetooth mode, then the CD Player will be ready to pair other Bluetooth devices such as mobile phones, pads etc., and its indicator light color will change to dark blue, the Bluetooth icon will appear on the screen.
2. Activate the Bluetooth in your mobile phone and it will automatically search nearby Bluetooth devices to pair.
3. Choose the named “**CD PLAYER**” device in your mobile phone Bluetooth device list to pair.
4. Your mobile phone will be paired / connected to the CD Player in a few seconds.
5. Playing music on your mobile phone and the audio will be transmitted to the CD Player speaker through Bluetooth.

FM Mode Instructions

1. Press FM/CH button on the remote to switch to FM mode or switch the “Mode” key (on the device) to the FM mode.
2. Press <Prev> or <Next> button to go to previous station or next station; or press digital keys to change to a certain station pre-stored.
3. Press FM/CH button again to search all radio stations and it will automatically store the first 40 stations if there are such enough stations around; After completed the searching, it will play the first station.

USB Mode Instructions

1. Plug in a U-disk to the CD Player USB port.
2. Press USB button on the remote to switch to USB mode or switch the “Mode” key (on the device) to the USB mode.
3. The CD Player will read and play the music in the U-disk and its indicator light color will change to grass green, the “USB” icon will appear on the screen.

Repeat Function

Press the repeat button on the remote to cycle between playback modes, available playback modes are: “Repeat One”, “Repeat ALL” or “Shuffle play”, will appear “ONE”, “ALL”, “SFL” and “OFF” on the screen.

A-B Repeat Function

The A-B Repeat function enables playback to a specific section repeatedly by setting the start point (A) and end point (B) for the section.

1. Press A-B button on the remote to set the start point (A) while playing,and will appear the “A” on the screen.
2. Press A-B button on the remote to set the end point (B) while playing, and will appear the “B” on the screen.
3. Then the specified section from A to B will be played back repeatedly.
4. Press A-B button again to exit AB repeat, and will appear the “OFF” on the screen.
5. Note: A-B Repeat function only works on CD and USB mode.

AUX Mode

1. Connect the CD Player to other Audio player devices with the included 3.5mm male-to-male audio cable.
2. Press AUX button on the remote to switch to AUX IN mode or switch the “Mode” key (on the device) to the AUX IN mode , then the audio will be transmitted to the CD Player speaker, the indicator light color will be green this time and will appear the “LINE” on the screen.

Trouble shooting

1. Cannot be turned on.
Reason1: Switch is not turned on.
Solution1: Please check if the pull switch is powered on.
Reason2: The player is damaged.
Solution2: Please contact us or ask a professional for repairs.

2. Cannot read discs.
Reason1: The disc is installed incorrectly.
Solution1: Make sure the label side of the disc is facing up; Ensure the disc is inserted fully into the place.
Reason2: The disc cannot be recognized.
Solution2: The player is only compatible with CD format.
Reason3: The disc is dirty or damaged.
Solution3: Make sure the disc is not heavily scratched or damaged; Wipe the disc gently from the center radially out to the edge with a clean & soft cloth; Try another new disc to check if the disc is faulty.
Reason4: The loader is dirty.
Solution4: Wipe the laser gently with a degreasing cotton swab. Note: DO NOT TOUCH THE LASER WITH YOUR HANDS.

3. Remote does not work.
Reason1: The insulation sheet is not removed.
Solution1: Check if the insulation sheet is removed from the battery slot.
Reason2: The remote is out of power.
Solution2: Check if the remote battery is running out.
Reason3: The remote is too far from the CD player.
Solution3: Make sure the remote is in the range of a reasonable distance (within 6 meters).

4. Noisy and screaming when it plays.
Reason1: Usage time of the disk may be too long, so the disk is not smooth.
Solution1: Make sure the disc is not heavily scratched or damaged; Wipe the disc gently from the center radically out to the edge with a clean & soft cloth; Try another new disc to check if the disc is faulty.
Reason2: If there is a "Jiji" sound inside the earphone, it may be caused by scratching of the disc.
Solution2: Please change to another disc, and do not use the old one again to prevent the player from damage.

This equipment has been tested and found to comply with the limits for a Class B digital device, pursuant to part 15 of the FCC Rules. These limits are designed to provide reasonable protection against harmful interference in a residential installation. This equipment generates, uses and can radiate radio frequency energy and, if not installed and used in accordance with the instructions, may cause harmful interference to radio communications. However, there is no guarantee that interference will not occur in a particular installation. If this equipment does cause harmful interference to radio or television reception, which can be determined by turning the equipment off and on, the user is encouraged to try to correct the interference by one or more of the following measures:

- Reorient or relocate the receiving antenna.
- Increase the separation between the equipment and receiver.
- Connect the equipment into an outlet on a circuit different from that to which the receiver is connected.
- Consult the dealer or an experienced radio/TV technician for help.

Caution: Any changes or modifications to this device not explicitly approved by manufacturer could void your authority to operate this equipment.

This device complies with part 15 of the FCC Rules. Operation is subject to the following two conditions: (1) This device may not cause harmful interference, and (2) this device must accept any interference received, including interference that may cause undesired operation.

The device has been evaluated to meet general RF exposure requirement.

IC warning statements:

-English Warning Statement:

“This device complies with Industry Canada licence-exempt RSS standard(s). Operation is subject to the following two conditions: (1) this device may not cause interference, and (2) this device must accept any interference, including interference that may cause undesired operation of the device."

The digital apparatus complies with Canadian CAN ICES-3 (B)/NMB-3(B).

-French Warning Statement:

“Le présent appareil est conforme aux CNR d'Industrie Canada applicables aux appareils radio exempts de licence. L'exploitation est autorisée aux deux conditions suivantes : (1) l'appareil ne doit pas produire de brouillage, et (2) l'utilisateur de l'appareil doit accepter tout brouillage radioélectrique subi, même si le brouillage est susceptible d'en compromettre le fonctionnement."

Cet appareil numérique de la classe B est conforme à la norme NMB-003 du Canada.

This equipment complies with IC radiation exposure limits set forth for an uncontrolled environment and meets RSS-102 of the IC radio frequency (RF) Exposure rules. This equipment has very low levels of RF energy that are deemed to comply without testing of specifc absorption ratio (SAR).Cet équipement est conforme aux limites d’exposition aux rayonnements énoncées pour un environnement non contrôlé et respecte les règles d’exposition aux fréquences radioélectriques (RF) CNR-102 de l’IC. Cet équipement émet une énergie RF très faible qui est considérée conforme sans évaluation du débit d’absorption spécifque (DAS).