創 維 集 團 有 限 公 司

Skyworth 创维 **SKYWORTH (GROUP) CO., LTD.**

ENGINEERING EVALUATION REPORT

REVISED

**2017-03-22

(COMPONENTS)

REPORT NO. : **EDE1607238**	SAMPLE IS :
MODEL : **6M24G**	☑ NEW PARTS
DATE COMPLETED : **2016-07-29**	☐ 1st SUBMISSION
QTY SUBMITTED :	☐ 2nd SUBMISSION
DESCRIPTIONS : **INSIDE WIFI MODULE NTUD-B10 W/MT7662TU**	☐ ALTERNATE SOURCE ☐ OTHER REMARKS SPECIFICATION ATTACHED ☑ YES ☐ NO

REMARKS :

SUPPLIER'S PARTNO. : **NTUD-B10**

OUR PARTS NO. : **534L-36NTUD-9010**

SUPPLIER :

MANUFACTURER : 创维集团研发总部工程研究院第五研究所

TEST RESULT : ☑ APPROVED ☐ REJECTED

☐ CONDITIONALLY APPROVED : SEE ITEMS LISTED BELOW

COMMENTS :
1. 所有壞料包退換。
2. 如有因元件質量問題而引起的損失，元件生產廠家需負全責。
3. 请在内/外包装箱上打印我公司物料编号:**534L-36NTUD-9010**。

IF CONDITIONALLY APPROVED :

☐ (a) SUPPLIER IS REQUESTED TO SUBMIT _____ PIECES SAMPLES AGAIN.

☐ (b) FOR PURCHASING TO BUY _____ PIECES FOR PILOT PRODUCTION.

TESTED BY ENGINEER (S)	APPROVED BY ENGINEERING MANAGER
ELECTRICAL 2016-7-29	

Rm. 1601-04 Westlands Centre, 20 Westlands Road, Quarry Bay, H.K. Tel: 2856 3138 SKYWO HX Fax:2586 3590

文件处理单

流转记录 打印处理单 返回

新电子EDE申请流转单

申请部门填写：			
申请人：	丁星01	申请时间：	2016-07-27
主题：	NY1607158 第五研究所 丁星01 的新电子EDE申请单		
部品名称及种类：	MT7662TU wifi模块		
部品型号：	NTUD-B10	基本单位：	PCS
适用机芯/机型：	6M24G		
部品类型：	●关键部品○非关键部品		
申请原因：	新品开发		
申请新物料编号：	□申请通用厂家物料编号■申请专用厂家物料编号		
被代用物料编号：			
在现有编号下增加其它厂家规格书：			
器件主要性能指标：	性能指标：OK		
	工艺及生产可操作性确认：符合规格要求		
	尺寸封装规格：ok		
	本体丝印（IC必填）：		
测试结果：	●合格 ○不合格（原因说明）:○		
制造商：	深圳创维-RDB电子		
附件列表	-没有附件- 打开		
备注：			
部品开发所填写：			
测试报告编号：	NY1607158		
技术参数：	●齐全 ○其它:		
技术规格书资料：	●齐全 ○其他:		
报关信息：	●齐全 ○其他:		
部品符合环保标准情况：	■符合ROHS□符合REACH□非ROHS		
供应商简称及代码：	创维（SKY110004）		
子类是否有资质供应商：	●有 ○无:		
物料属性：	物料组：WIFI板 物料组代码：20-53WXW		
是否已有规格代用：	电路代用： ●是 ○否	工艺代用： ●是 ○否	
备注：			
审批信息：			
申请人	请办理，谢谢！ 第五研究所 丁星01 2016年07月27日 11:18		

申请部门领导审批	ok 第五研究所 **周洪贵** 2016年07月27日 12:04
部品开发工程师意见	新品开发 部品开发研究所 **王金川** 2016年07月28日 17:21
部品开发所所长审批	同意 部品开发研究所 **陈军01** 2016年07月28日 17:45
研发领导批示	同意 第三研究院 **刘远军** 2016年07月28日 18:09
技术管理部审查、编制物料编码及EDE报告	已办理 EDE1607238 534L-36NTUD-9010 研发总部技术管理部 **苏海兰** 2016年07月29日 09:14

附件列表:

WIFI规格书NTUD-B10.doc , 进出口料报关信息表NTUD-B10.xls

創 維 集 團 有 限 公 司

Skyworth 创维 SKYWORTH (GROUP) CO., LTD.

EDE 更改记录 EDE REVISION RECORD				
序号	**更改内容**	**更改人**	**更改日期**	**更改编号**
1	534L-36NTUD-9010 更改图片，同时增加“模块尺寸：40*46.4*1mm。	张玉林	2016-10-11	16100007
2	534L-36NTUD-9010 兼容外销，统一同步为英文描述。	丁星	2017-03-22	17030053

制表：技术管理部

文件处理单

流转记录 打印处理单 返回

EDE更改通知流转单

申请信息：	
主题：	2017-03-20 第五研究所 丁星01 的EDE更改通知单
更改原因：	更改部分参数，兼容外销产品，统一翻译为英文描述
是否CKD使用：	○是●否
模版：	下载模版
EDE更改内容	-没有附件- 打开
审批信息：	
申请人	请办理，谢谢！ 第五研究所 丁星01 2017年03月20日 14:30
申请部门领导审批	ok 第五研究所 周洪贵 2017年03月20日 17:49
海外营销确认	
部品开发工程师意见	ok 部品开发研究所 王金川 2017年03月22日 09:18
部品开发所所长审批	同意 部品开发研究所 陈军01 2017年03月22日 16:25
供应链管理部意见	同意 供应链管理部 张誉琼 2017年03月22日 16:28
技术管理部审核	已办理 EDE1607238 534L-36NTUD-9010 研发总部技术管理部 苏海兰 2017年03月22日 17:06

附件列表:

ede更改模板.doc , Module_NTUD-B10 Spec.docx

编号：17030053

创维-RGB 电子有限公司

EDE 更改申请表 Ver3.0

兹于原 EDE 有以下内容需申请 EDE 更改，并要求于 立即 正式执行。

更改项目	物料编号	EDE 编号	是否更改型号	更改内容	更改页码
1	534L-36NTUD-9010	EDE1607238	否	兼容外销，统一同步为英文描述	全部
2					
3					
4					
5					
6					
7					
8					

制表：研发总部技术管理部

申请人：丁星　　日期：2017.03.20

**2017-03-22

WIFI USB DONGLE PRODUCTS SPECIFICATION

Product Name:	WIFI USB DONGLE
Part Number:	534L-36NTUD-9010
Product Specification:	MT7662TU
Product Model:	NTUD-B10
Version:	Second Edition
Environmental standards:	RoHS 2011/65/EC
Design:	DingXing
Audit:	ZhouHonggui
Date:	March 20, 2017

SKYWORTH Group Co., Ltd. R & D headquarters Engineering Research Institute

Fifth Institute

Certified Manufacturer Record

No	**Manufacturer number**	**Manufacturer name**	**Manufacturer** model	Confirm
1	534L	Shenzhen SKYWORTH -RGB Electronics Co., Ltd.	NTUD-B10	Zhangyulin

NO	Revision Version	Description of change history	Date	Initials

Technical specification

1. Module block diagram:

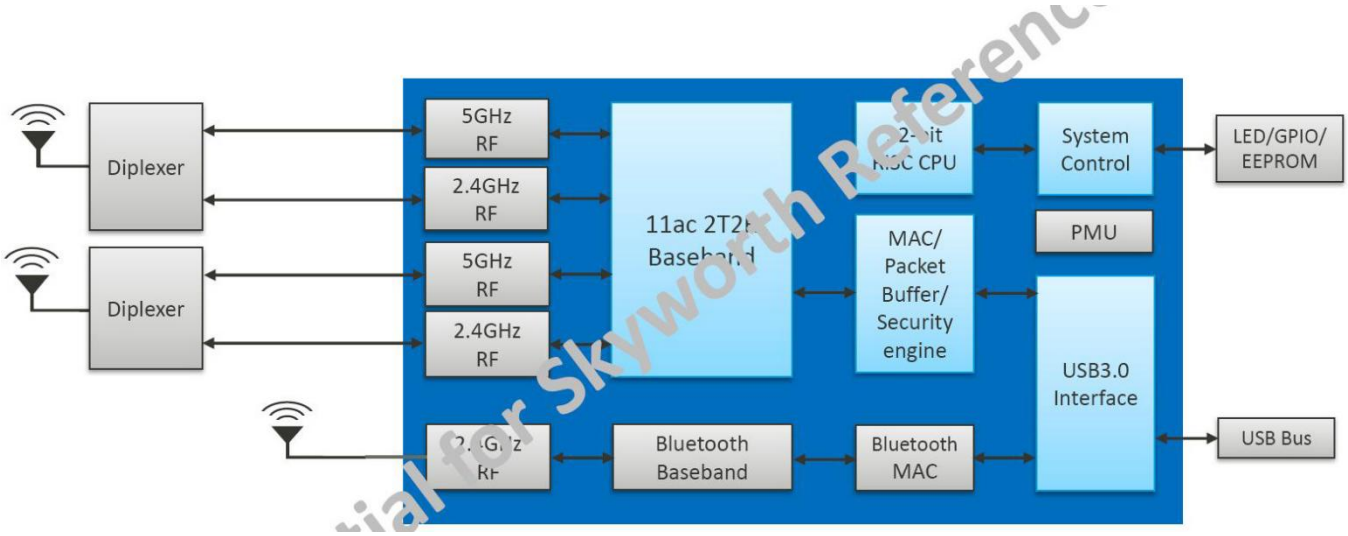

1.Program master chip using MT7662TU MEDIATEK

2. The module has two ways of transmitting and receiving (2T2R) function WiFi support dual band and 802.11ac,BT support 4.0 and BLE

3. Module working band: 2.4GHz and 5G

4. Modules meet the following criteria:

IEEE Std. 802.11a
IEEE Std. 802.11b
IEEE Std. 802.11g
IEEE Std. 802.11n
IEEE Std. 802.11ac
Bluetooth 2.1+EDR/3.0/4.0+BLE

5. The design of the module BOM number:

SMD BOM: MD00-23SA00-34

6. Module performance parameters:

The main chip	MeaiaTek MT7662TU
Working frequency	2.400~2.4835GHz; 5.180-5.865 GHz
WiFi standard	802.11a/b/g/n/ac(2x2)
BT standard	Bluetooth2.1+EDR/3.0/4.0+BLE
Modulation mode	11a: BPSK, QPSK, 16QAM, 64QAM and OFDM 11b: DBPSK, DQPSK and CCK and DSSS 11g: BPSK, QPSK, 16QAM, 64QAM and OFDM 11n: MCS0~15 OFDM 11ac: NSS2 MC0~9 OFDM Bluetooth2.1/3.0/4.0 GFSK
Data rate	11a: 11a: BPSK, QPSK, 16QAM, 64QAM and OFDM 11b: 1, 2, 5.5 and 11Mbps 11g: 6, 9, 12, 18, 24, 36, 48 and 54 Mbps 11n: MCS0~15, up to 450Mbps 11ac: MCS0~9, up to 866Mbps Bluetooth2.1/3.0/4.0 3Mbps
RF power output	＜17dBm@11b，＜15dBm@11g; ＜14dBm@11n;＜10dBm@BT
Output connector specifications	5400-99112S-0800 8pin 1.25mm W/LOCK
Interface data standards	USB 2.0
PCB data	Layer 4 row board design
equipment size	40mm(W)*46mm(L)*1.6mm(H)
antenna	Board layout antenna for WiFi,Extra antenna for BT
The module of weight	16.4g
Working temperature	0℃ to +60℃
Storage temperature	-40℃ to +85℃
Working voltage	5V +/-10%

8. Definition module output connector feet (5400-99112S-0800) :

Pin #	Name	Description
1	BT-WAKE	Device Wake with BT
2	WOW	WOWLAN with WIFI
3	GND	GND
4	GND	GND
5	D+	USB Data DP
6	D-	USB Data DM
7	VCC	+5V DC Power supply input
8	EN	Power on/off mode High(active):power on WiFi module

9. Module performance parameters:

a) 802.11ac-VHT-2SS BW20MHz Mode 5GHz

Items	Contents				
Specification	IEEE802.11ac VHT20 @ 5GHz				
Mode	OFDM				
Channel	CH36~CH173				
Data rate (MCS index)	MCS0-MCS9				
DC Characteristics	Min.	Typ.	Max.	Unit	Remark
1. DC current (Average) @5V input					
1) TX only @ 12dBm Target(each port), (continue Tx MIMO MCS7)	-	420	450	mA	
2) TX throughput mode (2SS)	-	650	700	mA	
3) RX throughput mode (2SS)	-	380	400	mA	
TX Characteristics	Min.	Typ.	Max.	Unit	
2. Power Levels (Calibrated)					
1) 11dBm Target (For Each antenna port)	10	11	12	dBm	
2) 11dBm Target (Combined two antenna port)	11	13	15	dBm	
3. Spectrum Mask @13dBm					
1) at fc +/- 22MHz	-	-	-20	dBr	
2) at fc +/- 40MHz	-	-	-28	dBr	
3) at fc > +/-60MHz	-	-	-45	dBr	
4. Constellation Error(EVM)@target power					
1) MCS0	-	-	-5	dB	
2) MCS1	-	-	-10	dB	
3) MCS2	-	-	-13	dB	
4) MCS3	-	-	-16	dB	
5) MCS4	-	-	-19	dB	
6) MCS5	-	-	-22	dB	
7) MCS6	-	-	-25	dB	
8) MCS7	-		-28	dB	
9) MCS8			-30	dB	
10) MCS9			-32	dB	
5. Frequency Error	-20	0	+20	ppm	
RX Characteristics (2R)	Min.	Typ.	Max.	Unit	
6. Minimum Input Level Sensitivity					
1) MCS0 (PER ≦ 10%)	-	-85	-76	dBm	
2) MCS1 (PER ≦ 10%)	-	-82	-73	dBm	
3) MCS2 (PER ≦ 10%)	-	-79	-71	dBm	

4) MCS3 (PER ≦ 10%)	-	-76	-68	dBm	
5) MCS4 (PER ≦ 10%)	-	-73	-64	dBm	
6) MCS5 (PER ≦ 10%)	-	-69	-60	dBm	
7) MCS6 (PER ≦ 10%)	-	-67	-59	dBm	
8) MCS7 (PER ≦ 10%)	-	-65	-58	dBm	
9) MCS8 (PER ≦ 10%)	-	-59	-53	dBm	
10) MCS9 (PER ≦ 10%)		-56	-51	dBm	
7. Maximum Input Level (PER ≦ 10%)	-20	-10	-	dBm	

b) 802.11ac-VHT-2SS BW40MHz Mode 5GHz

Items	Contents				
Specification	IEEE802.11ac VHT40 @ 5GHz				
Mode	OFDM				
Channel	CH38~CH167				
Data rate (MCS index)	MCS0-MCS9				
DC Characteristics	Min.	Typ.	Max.	Unit	Remark
1. DC current (Average) @5V input					
1) TX only @ 11dBm Target(each port), (continue Tx MIMO MCS7)	-	420	450	mA	
2) TX throughput mode (2SS)	-	800	850	mA	
3) RX throughput mode (2SS)	-	380	400	mA	
TX Characteristics	Min.	Typ.	Max.	Unit	
2. Power Levels (Calibrated)					
1) 11dBm Target (For Each antenna port)	10	11	12	dBm	
2) 11dBm Target (Combined two antenna port)	11	13	15	dBm	
3. Spectrum Mask @13dBm					
1) at fc +/- 22MHz	-	-	-20	dBr	
2) at fc +/- 40MHz	-	-	-28	dBr	
3) at fc > +/-60MHz	-	-	-45	dBr	
4. Constellation Error(EVM)@target power					
1) MCS0	-	-	-5	dB	
2) MCS1	-	-	-10	dB	
3) MCS2	-	-	-13	dB	
4) MCS3	-	-	-16	dB	
5) MCS4	-	-	-19	dB	
6) MCS5	-	-	-22	dB	
7) MCS6	-	-	-25	dB	
8) MCS7	-		-28	dB	
9) MCS8			-30	dB	
10) MCS9			-32	dB	
5. Frequency Error	-20	0	+20	ppm	
RX Characteristics (2R)	Min.	Typ.	Max.	Unit	
6. Minimum Input Level Sensitivity					
1) MCS0 (PER ≦ 10%)	-	-85	-76	dBm	
2) MCS1 (PER ≦ 10%)	-	-82	-73	dBm	
3) MCS2 (PER ≦ 10%)	-	-79	-71	dBm	
4) MCS3 (PER ≦ 10%)	-	-76	-68	dBm	
5) MCS4 (PER ≦ 10%)	-	-73	-64	dBm	
6) MCS5 (PER ≦ 10%)	-	-69	-60	dBm	
7) MCS6 (PER ≦ 10%)	-	-67	-59	dBm	
8) MCS7 (PER ≦ 10%)	-	-65	-58	dBm	
9) MCS8 (PER ≦ 10%)	-	-59	-53	dBm	
10) MCS9 (PER ≦ 10%)		-56	-51	dBm	
7. Maximum Input Level (PER ≦ 10%)	-20	-10	-	dBm	

c)802.11ac-VHT-2SS BW80MHz Mode 5GHz

Items	Contents				
Specification	IEEE802.11ac VHT80 @ 5GHz				
Mode	OFDM				
Channel	CH42~CH171				
Data rate (MCS index)	MCS0-MCS9				
DC Characteristics	Min.	Typ.	Max.	Unit	Remark
1. DC current (Average) @5V input					
1) TX only @ 11dBm Target(each port), (continue Tx MIMO MCS7)	-	420	450	mA	
2) TX throughput mode (2SS)	-	850	880	mA	
3) RX throughput mode (2SS)	-	380	400	mA	
TX Characteristics	Min.	Typ.	Max.	Unit	
2. Power Levels (Calibrated)					
1) 11dBm Target (For Each antenna port)	10	11	12	dBm	
2) 11dBm Target (Combined two antenna port)	11	13	15	dBm	
3. Spectrum Mask @13dBm					
1) at fc +/- 22MHz	-	-	-20	dBr	
2) at fc +/- 40MHz	-	-	-28	dBr	
3) at fc > +/-60MHz	-	-	-45	dBr	
4. Constellation Error(EVM)@target power					
1) MCS0	-	-	-5	dB	
2) MCS1	-	-	-10	dB	
3) MCS2	-	-	-13	dB	
4) MCS3	-	-	-16	dB	
5) MCS4	-	-	-19	dB	
6) MCS5	-	-	-22	dB	
7) MCS6	-	-	-25	dB	
8) MCS7	-		-28	dB	
9) MCS8			-30	dB	
10) MCS9			-32	dB	
5. Frequency Error	-20	0	+20	ppm	
RX Characteristics (2R)	Min.	Typ.	Max.	Unit	
6. Minimum Input Level Sensitivity					
1) MCS0 (PER ≦ 10%)	-	-85	-76	dBm	
2) MCS1 (PER ≦ 10%)	-	-82	-73	dBm	
3) MCS2 (PER ≦ 10%)	-	-79	-71	dBm	
4) MCS3 (PER ≦ 10%)	-	-76	-68	dBm	
5) MCS4 (PER ≦ 10%)	-	-73	-64	dBm	
6) MCS5 (PER ≦ 10%)	-	-69	-60	dBm	
7) MCS6 (PER ≦ 10%)	-	-67	-59	dBm	
8) MCS7 (PER ≦ 10%)	-	-65	-58	dBm	
9) MCS8 (PER ≦ 10%)	-	-59	-53	dBm	
10) MCS9 (PER ≦ 10%)		-56	-51	dBm	
7. Maximum Input Level (PER ≦ 10%)	-20	-10	-	dBm	

d) 802.11a BW20MHz Mode 5GHz

Items	Contents				
Specification	IEEE802.11a @5GHz				
Mode	OFDM				
Channel	CH36~CH173				
Data rate	6, 9, 12, 18, 24, 36, 48, 54Mbps				
DC Characteristics	Min.	Typ.	Max.	Unit	Remark
1. DC current (Average) @5V input					
1) TX only @13dBm (continue Tx SISO)	-	420	450	mA	
2) TX throughput mode	-	850	880	mA	
3) RX throughput mode	-	380	400	mA	
TX Characteristics	Min.	Typ.	Max.	Unit	
2. Power Levels					
1) 13dBm Target (For Each antenna port)	12	13	14	dBm	
3. Spectrum Mask @ target power					
1) at fc +/- 11MHz	-	-	-20	dBr	
2) at fc +/- 20MHz	-	-	-28	dBr	
3) at fc > +/-30MHz	-	-	-40	dBr	
4 Constellation Error(EVM)@ target power					
1) 6Mbps	-	-	-5	dB	
2) 9Mbps	-	-	-8	dB	
3) 12Mbps	-	-	-10	dB	
4) 18Mbps	-	-	-13	dB	
5) 24Mbps	-	-	-16	dB	
6) 36Mbps	-	-	-19	dB	
7) 48Mbps	-	-	-22	dB	
8) 54Mbps	-	-30	-25	dB	
5 Frequency Error	-20	0	+20	ppm	
RX Characteristics (2R)	Min.	Typ.	Max.	Unit	
6 Minimum Input Level Sensitivity					
1) 6Mbps (PER ≦ 10%)	-	-95	-85	dBm	
2) 9Mbps (PER ≦ 10%)	-	-94	-84	dBm	
3) 12Mbps (PER ≦ 10%)	-	-94	-82	dBm	
4) 18Mbps (PER ≦ 10%)	-	-92	-80	dBm	
5) 24Mbps (PER ≦ 10%)	-	-88	-77	dBm	
6) 36Mbps (PER ≦ 10%)	-	-85	-73	dBm	
7) 48Mbps (PER ≦ 10%)	-	-81	-69	dBm	
8) 54Mbps (PER≦ 10%)	-	-80	-68	dBm	
7 Maximum Input Level (PER ≦ 10%)	-20	-10	-	dBm	

e) 802.11b BW20MHz Mode 2.4GHz

Items	Contents				
Specification	IEEE802.11b				
Mode	DSSS / CCK				
Channel	CH1 to CH14				
Data rate	1,2, 5.5 ,11Mbps				
DC Characteristics	Min.	Typ.	Max.	Unit	Remark
1.DC current (Average) @5V input					
1) TX only @17dBm (continue Tx SISO)	-	420	460	mA	
2) TX throughput mode	-	420	460	mA	
3) RX throughput mode	-	250	300	mA	
TX Characteristics	Min.	Typ.	Max.	Unit	
2. Power Levels(Calibrated)					
1) 17dBm Target (For Each antenna port)	16	17	18	dBm	
3. Spectrum Mask @ target power					
1) fc +/-11MHz to +/-22MHz	-	-	-30	dBr	
2) fc > +/-22MHz	-	-	-50	dBr	
4 Constellation Error(EVM)@ target power					
1) 11Mbps			8	%	
5. Frequency Error	-25	0	+25	ppm	
RX Characteristics (2R)	Min.	Typ.	Max.	Unit	
6 Minimum Input Level Sensitivity					
1) 1Mbps (FER≦8%)	-	-95	-83	dBm	
2) 2Mbps (FER≦8%)	-	-93	-80	dBm	
3) 5.5Mbps (FER≦8%)	-	-90	-79	dBm	
4) 11Mbps (FER≦8%)	-	-86	-76	dBm	
7 Maximum Input Level (FER≦8%)	-20	-10	-	dBm	

f) 802.11g BW20MHz Mode 2.4GHz

Items	Contents				
Specification	IEEE802.11g				
Mode	OFDM				
Channel	CH1 to CH14				
Data rate	6, 9, 12, 18, 24, 36, 48, 54Mbps				
DC Characteristics	Min.	Typ.	Max.	Unit	Remark
1. DC current (Average) @5V input					
1) TX only @14dBm (continue Tx SISO)	-	400	430	mA	
2) TX throughput mode	-	420	450	mA	
3) RX throughput mode	-	250	300	mA	
TX Characteristics	Min.	Typ.	Max.	Unit	
2. Power Levels					
1) 14dBm Target (For Each antenna port)	13	14	15	dBm	
3. Spectrum Mask @ target power					
1) at fc +/- 11MHz	-	-	-20	dBr	
2) at fc +/- 20MHz	-	-	-28	dBr	
3) at fc > +/-30MHz	-	-	-40	dBr	
4 Constellation Error(EVM)@ target power					
1) 6Mbps	-	-	-5	dB	
2) 9Mbps	-	-	-8	dB	
3) 12Mbps	-	-	-10	dB	
4) 18Mbps	-	-	-13	dB	
5) 24Mbps	-	-	-16	dB	
6) 36Mbps	-	-	-19	dB	
7) 48Mbps	-	-	-22	dB	
8) 54Mbps	-	-30	-25	dB	
5 Frequency Error	-25	0	+25	ppm	
RX Characteristics (2R)	Min.	Typ.	Max.	Unit	
6 Minimum Input Level Sensitivity					
1) 6Mbps (PER ≦ 10%)	-	-93	-85	dBm	
2) 9Mbps (PER ≦ 10%)	-	-92	-84	dBm	
3) 12Mbps (PER ≦ 10%)	-	-90	-82	dBm	
4) 18Mbps (PER ≦ 10%)	-	-88	-80	dBm	
5) 24Mbps (PER ≦ 10%)	-	-85	-77	dBm	
6) 36Mbps (PER ≦ 10%)	-	-82	-73	dBm	
7) 48Mbps (PER ≦ 10%)	-	-78	-69	dBm	
8) 54Mbps (PER≦ 10%)	-	-77	-68	dBm	
7 Maximum Input Level (PER ≦ 10%)	-20	-10	-	dBm	

g) 802.11n HT20 Mode 2.4GHz

Items	Contents				
Specification	IEEE802.11n HT20 @ 2.4GHz				
Mode	OFDM				
Channel	CH1 to CH14				
Data rate (MCS index)	MCS0-MCS15				
DC Characteristics	Min.	Typ.	Max.	Unit	Remark
1. DC current (Average) @5V input					
1) TX only @ 13dBm Target(each port), (continue Tx MIMO MCS15)	-	420	460	mA	
2) TX throughput mode (MCS15)	-	420	460	mA	
3) RX throughput mode	-	250	300	mA	
TX Characteristics	Min.	Typ.	Max.	Unit	
2. Power Levels					
1) 13dBm Target (For Each antenna port)	12	13	14	dBm	
2) 13dBm Target (Combined two antenna port)	15	17	19	dBm	
3. Spectrum Mask @14.5dBm					
1) at fc +/- 11MHz	-	-	-20	dBr	
2) at fc +/- 20MHz	-	-	-28	dBr	
3) at fc > +/-30MHz	-	-	-45	dBr	
4. Constellation Error(EVM)@ target power					
1) MCS0	-	-	-5	dB	
2) MCS1	-	-	-10	dB	
3) MCS2	-	-	-13	dB	
4) MCS3	-	-	-16	dB	
5) MCS4	-	-	-19	dB	
6) MCS5	-	-	-22	dB	
7) MCS6	-	-	-25	dB	
8) MCS7	-	-30	-28	dB	
5. Frequency Error	-25	0	+25	ppm	
RX Characteristics (2R)	Min.	Typ.	Max.	Unit	
6. Minimum Input Level Sensitivity					
1) MCS0 (PER ≦ 10%)		-91	-85	dBm	
2) MCS1 (PER ≦ 10%)		-88	-82	dBm	
3) MCS2 (PER ≦ 10%)		-87	-80	dBm	
4) MCS3 (PER ≦ 10%)		-83	-77	dBm	
5) MCS4 (PER ≦ 10%)		-81	-73	dBm	
6) MCS5 (PER ≦ 10%)		-76	-69	dBm	
7) MCS6 (PER ≦ 10%)		-75	-68	dBm	
8) MCS7 (PER ≦ 10%)		-75	-67	dBm	
9) MCS8(PER ≦ 10%)	-	-89	-82	dBm	
10) MCS9(PER ≦ 10%)	-	-87	-79	dBm	
11) MCS10 (PER ≦ 10%)	-	-84	-77	dBm	
12) MCS11(PER ≦ 10%)	-	-81	-74	dBm	
13) MCS12(PER ≦ 10%)	-	-78	-70	dBm	
14) MCS13(PER ≦ 10%)	-	-73	-66	dBm	
15) MCS14(PER ≦ 10%)	-	-72	-65	dBm	
16) MCS15(PER ≦ 10%)		71	-64	dBm	
7. Maximum Input Level (PER ≦ 10%)	-20	-10	-	dBm	

h) 802.11n HT40 Mode 2.4GHz

Items	Contents				
Specification	IEEE802.11n HT40 @ 2.4GHz				
Mode	OFDM				
Channel	CH3 to CH11				
Data rate (MCS index)	MCS0-MCS15				
DC Characteristics	Min.	Typ.	Max.	Unit	Remark
1. DC current (Average) @5V input					
1) TX only @ 13dBm Target(each port), (continue Tx MIMO MCS15)	-	420	460	mA	
2) TX throughput mode	-	420	460	mA	
3) RX throughput mode	-	250	300	mA	
TX Characteristics	Min.	Typ.	Max.	Unit	
2. Power Levels (Calibrated)					
1) 13dBm Target (For Each antenna port)	12	13	14	dBm	
2) 13dBm Target (Combined two antenna port)	15	17	19	dBm	
3. Spectrum Mask @13dBm					
1) at fc +/- 22MHz	-	-	-20	dBr	
2) at fc +/- 40MHz	-	-	-28	dBr	
3) at fc > +/-60MHz	-	-	-45	dBr	
4. Constellation Error(EVM)@target power					
1) MCS0	-	-	-5	dB	
2) MCS1	-	-	-10	dB	
3) MCS2	-	-	-13	dB	
4) MCS3	-	-	-16	dB	
5) MCS4	-	-	-19	dB	
6) MCS5	-	-	-22	dB	
7) MCS6	-	-	-25	dB	
8) MCS7	-	-30	-28	dB	
5. Frequency Error	-25	0	+25	ppm	
RX Characteristics (2R)	Min.	Typ.	Max.	Unit	
6. Minimum Input Level Sensitivity					
1) MCS15 (PER ≦ 10%)	-	-67	-61	dBm	
2) MCS14 (PER ≦ 10%)	-	-69	-62	dBm	
3) MCS13 (PER ≦ 10%)	-	-70	-63	dBm	
4) MCS12 (PER ≦ 10%)	-	-75	-67	dBm	
5) MCS11 (PER ≦ 10%)	-	-78	-71	dBm	
6) MCS10 (PER ≦ 10%)	-	-82	-74	dBm	
7) MCS9 (PER ≦ 10%)	-	-83	-76	dBm	
8) MCS8 (PER ≦ 10%)	-	-87	-79	dBm	
1) MCS7 (PER ≦ 10%)	-	-71	-64	dBm	
2) MCS6 (PER ≦ 10%)	-	-72	-65	dBm	
3) MCS5 (PER ≦ 10%)	-	-74	-66	dBm	
4) MCS4 (PER ≦ 10%)	-	-78	-70	dBm	
5) MCS3 (PER ≦ 10%)	-	-81	-74	dBm	
6) MCS2 (PER ≦ 10%)	-	-84	-77	dBm	
7) MCS1 (PER ≦ 10%)	-	-86	-79	dBm	
8) MCS0 (PER ≦ 10%)	-	-88	-82	dBm	
7. Maximum Input Level (PER ≦ 10%)	-20	-10	-	dBm	

k)802.11n HT40 Mode 5GHz

Items	Contents				
Specification	IEEE802.11n HT40 @ 5GHz				
Mode	OFDM				
Channel	CH36 to CH173				
Data rate (MCS index)	MCS0-MCS15				
DC Characteristics	Min.	Typ.	Max.	Unit	Remark
1. DC current (Average) @5V input					
1) TX only @ 12dBm Target(each port), (continue Tx MIMO MCS15)	-	430	460	mA	
2) TX throughput mode	-	440	480	mA	
3) RX throughput mode	-	370	400	mA	
TX Characteristics	Min.	Typ.	Max.	Unit	
2. Power Levels (Calibrated)					
1) 12dBm Target (For Each antenna port)	10	11	12	dBm	
2) 12dBm Target (Combined two antenna port)	12	14	16	dBm	
3. Spectrum Mask @13dBm					
1) at fc +/- 22MHz	-	-	-20	dBr	
2) at fc +/- 40MHz	-	-	-28	dBr	
3) at fc > +/-60MHz	-	-	-45	dBr	
4. Constellation Error(EVM)@target power					
1) MCS0	-	-	-5	dB	
2) MCS1	-	-	-10	dB	
3) MCS2	-	-	-13	dB	
4) MCS3	-	-	-16	dB	
5) MCS4	-	-	-19	dB	
6) MCS5	-	-	-22	dB	
7) MCS6	-	-	-25	dB	
8) MCS7	-		-28	dB	
5. Frequency Error	-20	0	+20	ppm	
RX Characteristics (2R)	Min.	Typ.	Max.	Unit	
6. Minimum Input Level Sensitivity					
1) MCS15 (PER ≦ 10%)	-	-71	-61	dBm	
2) MCS14 (PER ≦ 10%)	-	-71	-62	dBm	
3) MCS13 (PER ≦ 10%)	-	-72	-63	dBm	
4) MCS12 (PER ≦ 10%)	-	-77	-67	dBm	
5) MCS11 (PER ≦ 10%)	-	-80	-71	dBm	
6) MCS10 (PER ≦ 10%)	-	-84	-74	dBm	
7) MCS9 (PER ≦ 10%)	-	-86	-76	dBm	
8) MCS8 (PER ≦ 10%)	-	-89	-79	dBm	
1) MCS7 (PER ≦ 10%)	-	-74	-64	dBm	
2) MCS6 (PER ≦ 10%)	-	-75	-65	dBm	
3) MCS5 (PER ≦ 10%)	-	-76	-66	dBm	
4) MCS4 (PER ≦ 10%)	-	-81	-70	dBm	
5) MCS3 (PER ≦ 10%)	-	-84	-74	dBm	
6) MCS2 (PER ≦ 10%)	-	-87	-77	dBm	
7) MCS1 (PER ≦ 10%)	-	-89	-79	dBm	
8) MCS0 (PER ≦ 10%)	-	-90	-82	dBm	
7. Maximum Input Level (PER ≦ 10%)	-20	-10	-	dBm	

h)Bluetooth 2.1/3.0/4.0 2.4GHz

Items	Contents				
Specification	Bluetooth 2.1/3.0/4.0 2.4GHz				
Mode	GFSM				
Channel	CH0 to CH78				
DC Characteristics	Min.	Typ.	Max.	Unit	Remark
1. DC current (Average) @5V input					
1) TX only @Class1Target	-	69	85	mA	
2) TX throughput mode	-	69	85	mA	
3) RX throughput mode	-	44	60	mA	
4)Sleep mode		1.5	3	mA	
TX Characteristics	Min.	Typ.	Max.	Unit	
2. Power Levels @Class1					
1) CH0 Avg DH5 Dynamic PRBS	0	4.8	20	dBm	
2) CH39 Avg DH5 Dynamic PRBS	-6	0	4	dBm	
3) CH78 Avg DH5 Dynamic PRBS	-6	0	4	dBm	
3. Modulation Characteristics					
1) DH5 CH0 Payload11110000 Flavg	140k	168K	175k	Hz	
2) DH5 CH0 Payload11110000 Flmax	115k	100K	-	Hz	
3) Flavg/Flmax	0.8	0.85	-	-	
4) DH5 CH39 Payload11110000 Flavg	140k	168K	175k	Hz	
5) DH5 CH39 Payload11110000 Flmax	115k	100K	-	Hz	
6) Flavg/Flmax	0.8	0.85	-	-	
7) DH5 CH78 Payload11110000 Flavg	140k	168K	175k	Hz	
8) DH5 CH78 Payload11110000 Flmax	115k	100K	-	Hz	
9) Flavg/Flmax	0.8	0.85	-	-	
4.Carrier Frequency Drift					
DH1@±25KHZ	-	-	20k	Hz/50us	
DH3@±40KHZ	-	-	20k	Hz/50us	
DH5@±40KHZ	-	-	20k	Hz/50us	
RX Characteristics	Min.	Typ.	Max.	Unit	
6. Minimum Input Level Sensitivity					
1) DH1@CH0 (BER ≦ 10%)	-	-90	-87	dBm	
2) DH1@CH39 (BER ≦ 10%)	-	-90	-87	dBm	
3) DH1@CH78 (BER ≦ 10%)	-	-90	-87	dBm	
4) DH3@CH0 (BER ≦ 10%)	-	-90	-87	dBm	
5) DH3@CH39(BER ≦ 10%)	-	-90	-87	dBm	
6) DH3@CH78 (BER ≦ 10%)	-	-84	-87	dBm	
7) DH5@CH78 (BER ≦ 10%)	-	-86	-87	dBm	
8) DH5@CH39 (BER ≦ 10%))	-	-89	-79	dBm	
1)DH5@CH78 (BER ≦ 10%)	-	-74	-64	dBm	
7. Maximum Input Level (PER ≦ 10%)	-50	-35	-	dBm	

NOTE:The WiFi support full frequency band in 2.4G and 5G,software will selectively support the legal frequency channel of sales area.It also support DFS

10. The antenna gain

WiFi antenna on PCB	
Operating Frequency	2.412~2.472GHz
VSWR	<=2.0:1
Peak Gain	4dBi
Antenna Type	Metal PiFA
BT extra antenna	
Operating Frequency	2400~2500(MHz）
VSWR	<=2.0:1
Peak Gain	1.4dBi
Antenna Type	RF cable+PCB

11. Power timing requirements

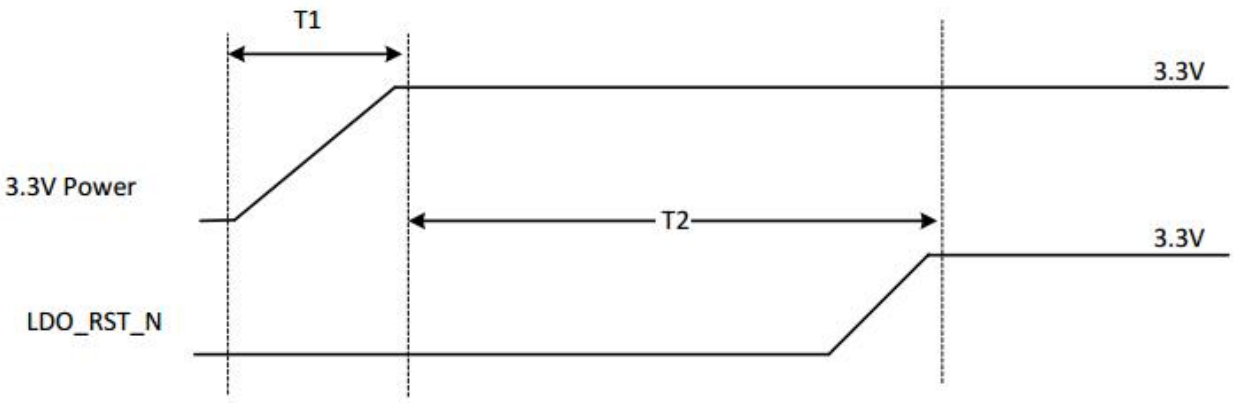

T1: max. 3.5ms
T2 > 0 (LDO_RST_N must be asserted after 3.3V ready)

12. Product appearance:

PCBA front:

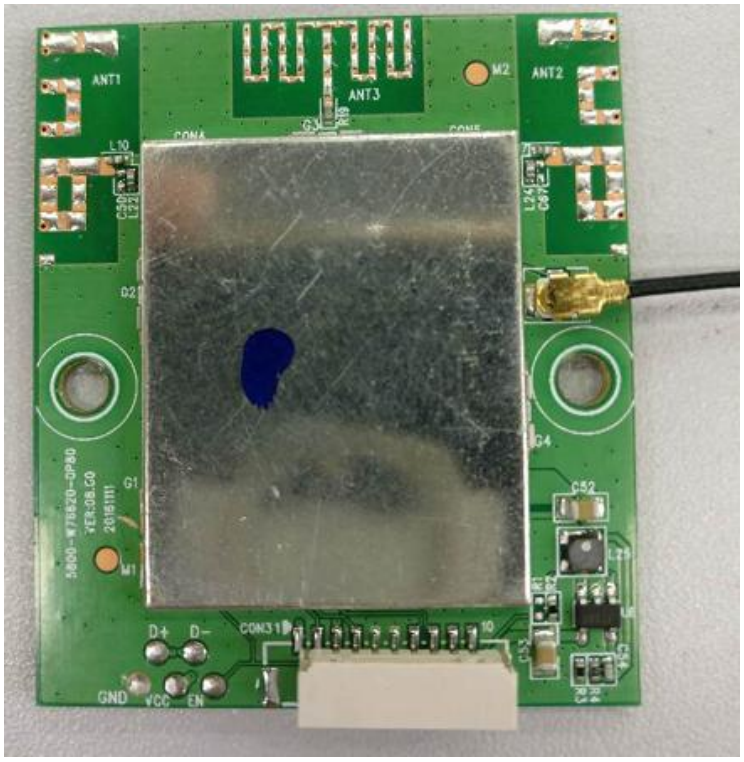

PCBA opposite:

BT extra antenna(One of two species)

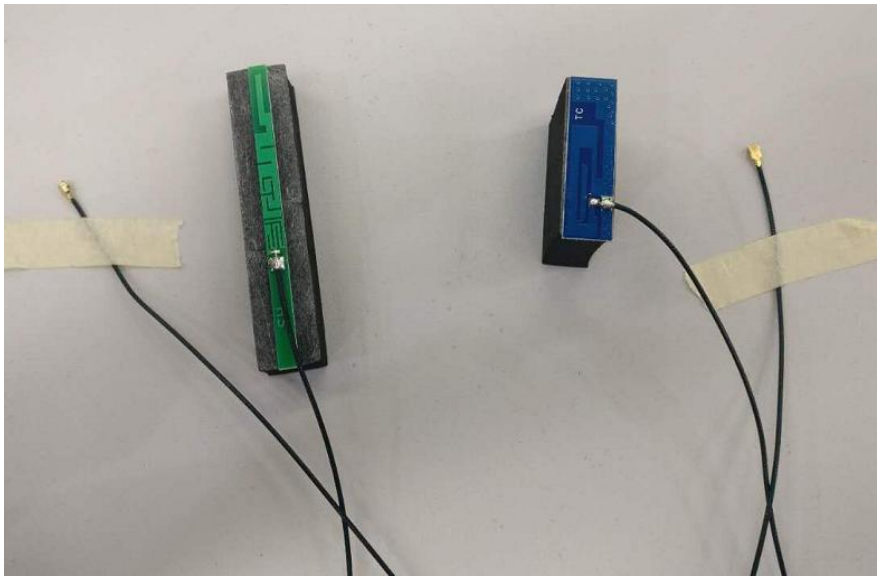

R & D headquarters Engineering Research Institute of Fifth Institute

2017-03-20

进出口料报关信息表（供应商填写）																	
注：此表在填写的时候可以调整列宽和行高，但不能更改此表的结构，具体填写参数请参照《报关信息要素》。																	
创维物料编号（由客户填写）	供应商代码（由供应商填	商品中文名称（按规范填写）	规格型号	品牌	生产厂家	净重（G）	原产国	功/频率	电压（耐	结构类型	主要参数	是单层还是多层？	用途/功能描述	工作原理	是否加密	备注1	备注2
534L-36NTUD-9010	SKY110004	无线模块	NTUD-B10	SKYWORTH	SKYWORTH	16.4	中国						无线上网、蓝牙		否		
填写单位：第五研究所															填写	丁星	