TEST REPORT

Report No.:	BCTC2211946586-6E
Applicant:	SHENZHEN YUNJI INTELLIGENT TECHNOLOGY CO.,LTD
Product Name:	Tablet
Model/Type reference:	RT3
Tested Date:	2022-11-16 to 2022-12-08
Issued Date:	2022-12-09

Shenzhen BCTC Testing Co., Ltd.

FCC ID: 2ANMU-RT3

Product Name:	Tablet
Trademark:	OUKITEL
Model/Type reference:	RT3 RT3 Pro, RT3 S
Prepared For:	SHENZHEN YUNJI INTELLIGENT TECHNOLOGY CO.,LTD
Address:	A2 2F BUILDING ENET NEW INDUSTRIAL PARK, DAFU INDUSTRIAL ZONE, GUANLAN, LONGHUA SHENZHEN, 518XXX China
Manufacturer:	SHENZHEN YUNJI INTELLIGENT TECHNOLOGY CO.,LTD
Address:	A2 2F BUILDING ENET NEW INDUSTRIAL PARK, DAFU INDUSTRIAL ZONE, GUANLAN, LONGHUA SHENZHEN, 518XXX China
Prepared By:	Shenzhen BCTC Testing Co., Ltd.
Address:	1-2/F., Building B, Pengzhou Industrial Park, No.158, Fuyuan 1st Road, Zhancheng, Fuhai Subdistrict, Bao'an District, Shenzhen, Guangdong, China
Sample Received Date:	2022-11-16
Sample tested Date:	2022-11-16 to 2022-12-08
Issue Date:	2022-12-09
Report No.:	BCTC2211946586-6E
Test Standards:	FCC CFR Title 47 Part 2 FCC CFR Title 47 Part 22 FCC CFR Title 47 Part 24 FCC CFR Title 47 Part 27
Test Results:	PASS
Remark:	This is radio test report for 4G in US full bands.

Tested by:

Brave Zeng/ Project Handler

Approved by:

Zero Zhou/Reviewer

The test report is effective only with both signature and specialized stamp. This result(s) shown in this report refer only to the sample(s) tested. Without written approval of Shenzhen BCTC Testing Co., Ltd, this report can't be reproduced except in full. The tested sample(s) and the sample information are provided by the client.

Table Of Content

Test Report Declaration Page
1. Version 5
2. Test Summary 6
3. Measurement Uncertainty 7
4. Product Information And Test Setup 8
4.1 Product Information 8
4.2 Test Setup Configuration 9
4.2 Emission Designator 9
4.3 Description Operation Frequency 12
4.4 Test Mode 14
4.5 Support Equipment 17
4.6 Measurement Results Explanation Example 17
5. Test Facility And Test Instrument Used 18
5.1 Test Facility 18
5.2 Test Instrument Used 18
6. RF Output Power 19
6.1 Block Diagram Of Test Setup 19
6.2 Limit 21
6.3 Test procedure 21
6.4 Test Result 22
7. Peak-To-Average Ratio(PAR) Of Transmitter 28
7.1 Block Diagram Of Test Setup 28
7.2 Limit 28
7.3 Test procedure 28
7.4 Test Result 28
8. Emission Bandwidth 29
8.1 Block Diagram Of Test Setup 29
8.2 Standard Applicable 29
8.3 Test procedure 29
8.4 Test Result 29
9. Out of Band Emissions at Antenna Terminal 30
9.1 Block Diagram Of Test Setup 30
9.2 Limit 30
9.3 Test procedure 30
9.4 Test Result 30
10. Spurious Radiated Emissions 31
10.1 Block Diagram Of Test Setup 31
10.2 Limit 32
10.3 Test procedure 32
10.4 Test Result 33
11. Frequency Stability 36
11.1 Block Diagram Of Test Setup 36

11.2 Limit 36
11.3 Test procedure 36
11.4 Test Result 36
12. EUT Photographs 37
13. EUT Test Setup Photographs 38

(Note: N/A Means Not Applicable)

1. Version

Report No.	Issue Date	Description	Approved
BCTC2211946586-6E	2022-12-09	Original	Valid

2. Test Summary

The Product has been tested according to the following specifications:

No.	Test Parameter	Clause No	Results
1	RF Exposure	§1.1307,§2.1093	PASS
2	RF Output Power	§2.1046; §22.913; §24.232(c); §27.50(d); §27.50(c); §27.50(b);	PASS
3	Peak-to-average Ratio(PAR) of Transmitter	§2.1046; §24.232(d) §27.50(d);§27.50(c); §27.50(b);	PASS
4	Emission Bandwidth	§2.1049; §24.238(b);§27.53;	PASS
5	Spurious Emissions at Antenna Terminal	§22.917 (a), §24.238 (a), §27.53(g),§27.53(h)	PASS
6	Spurious Radiation Emissions	§2.1051; §22.917(a); §27.53(h); §27.53(g); §27.53(c); §24.238(a);	PASS
7	Out of Band Emissions	§2.1051; §22.917(a); §27.53(h); §27.53(c); §27.53(g); §24.238(a);	PASS
8	Frequency Stability	§2.1055;§22.355; §27.54; §24.235;	PASS

3. Measurement Uncertainty

The reported uncertainty of measurement y ± U, where expended uncertainty U is based on a standard uncertainty multiplied by a coverage factor of k=2, providing a level of confidence of approximately 95 %.

No.	Item	Uncertainty
1	3m chamber Radiated spurious emission(30MHz-1GHz)	U=4.3dB
2	3m chamber Radiated spurious emission(9KHz-30MHz)	U=3.7dB
3	3m chamber Radiated spurious emission(1GHz-18GHz)	U=4.5dB
4	3m chamber Radiated spurious emission(18GHz-40GHz)	U=3.34dB
5	Conducted Emission (150kHz-30MHz)	U=3.20dB
6	Conducted Adjacent channel power	U=1.38dB
7	Conducted output power uncertainty Above 1G	U=1.576dB
8	Conducted output power uncertainty below 1G	U=1.28dB
9	humidity uncertainty	U=5.3%
10	Temperature uncertainty	U=0.59℃

4. Product Information And Test Setup

4.1 Product Information

Model/Type reference:	RT3 RT3 Pro, RT3 S
Model differences:	All the model are the same circuit and RF module, except model names.
Hardware Version:	N/A
Software Version:	N/A
Tx Frequency:	LTE Band 2: 1850 MHz ~ 1910 MHz LTE Band 4: 1710 MHz ~ 1755 MHz LTE Band 5: 824 MHz ~ 849 MHz LTE Band 7: 2500MHz-2570MHz LTE Band 12: 699 MHz ~ 716 MHz LTE Band 17: 704MHz-716MHz
Rx Frequency:	LTE Band 2: 1930 MHz ~ 1990 MHz LTE Band 4: 2110 MHz ~ 2155 MHz LTE Band 5: 869 MHz ~ 894 MHz LTE Band 7: 2620MHz-2690MHz LTE Band 12: 729 MHz ~ 746 MHz LTE Band 17: 734MHz-746MHz
Bandwidth:	LTE Band 2: 1.4MHz /3MHz /5MHz /10MHz /15MHz /20MHz LTE Band 4: 1.4MHz /3MHz /5MHz /10MHz /15MHz /20MHz LTE Band 5: 1.4MHz /3MHz /5MHz /10MHz LTE Band 7: 5MHz /10MHz /15MHz /20MHz LTE Band 12: 1.4MHz /3MHz /5MHz /10MHz LTE Band 17: 5MHz /10MHz
Maximum Output Power to Antenna:	LTE Band 2: 23.64 dBm LTE Band 4: 24.23 dBm LTE Band 5: 24.06 dBm LTE Band 7: 23.72 dBm LTE Band 12: 20.68 dBm LTE Band 17: 20.81 dBm
99% Occupied Bandwidth:	LTE Band 2: 18M0G7D LTE Band 4: 18M0G7D LTE Band 5: 9M04W7D LTE Band 7: 17M9W7D LTE Band 12: 9M12G7D LTE Band 17: 9M00G7D
Type of Modulation:	QPSK/16QAM
Antenna Type:	Internal Antenna
Antenna Gain:	LTE Band 2: -0.05 dBi LTE Band 4: 0.03 dBi LTE Band 5: -0.13 dBi LTE Band 7: 0.22 dBi LTE Band 12: -0.13 dBi LTE Band 17: -0.13 dBi
Connecting I/O Port(s):	Please refer to the User's Manual
Ratings:	DC 5V from adapter/DC 3.85V from battery
Adapter Information:	Model: PS10UA050K2000UU Input: 100-240V~50/60Hz 0.35A Max Output: DC 5V 2.0A 10.0W

4.2 Test Setup Configuration

See test photographs attached in *EUT TEST SETUP PHOTOGRAPHS* for the actual connections between Product and support equipment.
Conducted Emission:

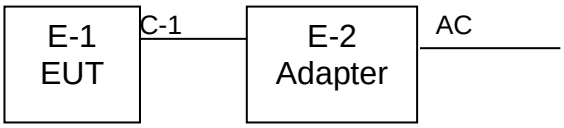

Radiated Spurious Emission

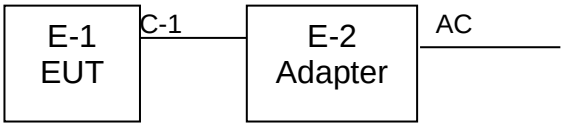

4.2 Emission Designator

LTE Band 2	QPSK		16QAM	
BW(MHz)	**Emission Designator (99%OBW)**	**Maximum EIRP(W)**	**Emission Designator (99%OBW)**	**Maximum EIRP(W)**
1.4	1M10G7D	0.202	1M10W7D	0.165
3	2M70G7D	0.206	2M69W7D	0.173
5	4M53G7D	0.206	4M52W7D	0.179
10	8M98G7D	0.207	8M97W7D	0.179
15	13M4G7D	0.211	13M4W7D	0.177
20	18M0G7D	0.231	18M0W7D	0.195

LTE Band 4	QPSK		16QAM	
BW(MHz)	Emission Designator (99%OBW)	Maximum EIRP(W)	Emission Designator (99%OBW)	Maximum EIRP(W)
1.4	1M09G7D	0.255	1M10W7D	0.200
3	2M70G7D	0.260	2M69W7D	0.221
5	4M52G7D	0.265	4M51W7D	0.229
10	9M00G7D	0.258	8M98W7D	0.202
15	13M5G7D	0.259	13M5W7D	0.211
20	18M0G7D	0.257	18M0W7D	0.212

LTE Band 5	QPSK		16QAM	
BW(MHz)	Emission Designator (99%OBW)	Maximum ERP(W)	Emission Designator (99%OBW)	Maximum ERP(W)
1.4	1M10G7D	0.234	1M10W7D	0.192
3	2M71G7D	0.255	2M70W7D	0.208
5	4M53G7D	0.248	4M51W7D	0.214
10	9M02G7D	0.237	9M04W7D	0.203

LTE Band 7	QPSK		16QAM	
BW(MHz)	Emission Designator (99%OBW)	Maximum ERP(W)	Emission Designator (99%OBW)	Maximum ERP(W)
5	4M51G7D	0.215	4M52W7D	0.206
10	8M99G7D	0.229	9M00W7D	0.193
15	13M5G7D	0.236	13M4W7D	0.195
20	17M9G7D	0.223	17M9W7D	0.177

LTE Band 12	QPSK		16QAM	
BW(MHz)	Emission Designator (99%OBW)	Maximum ERP(W)	Emission Designator (99%OBW)	Maximum ERP(W)
1.4	1M12G7D	0.113	1M10W7D	0.092
3	2M71G7D	0.114	2M70W7D	0.098
5	4M56G7D	0.117	4M56W7D	0.098
10	9M12G7D	0.111	9M11W7D	0.096

LTE Band 17	QPSK		16QAM	
BW(MHz)	**Emission Designator (99%OBW)**	**Maximum ERP(W)**	**Emission Designator (99%OBW)**	**Maximum ERP(W)**
5	4M54G7D	0.121	4M53W7D	0.108
10	9M00G7D	0.114	8M98W7D	0.098

4.3 Description Operation Frequency

LTE Band 2(1.4MHz)		LTE Band 2(3MHz)	
Channel	**Frequency (MHz)**	**Channel**	**Frequency (MHz)**
18607	1850.7	18615	1851.5
18900	1880	18900	1880
19193	1909.3	19185	1908.5
LTE Band 2(5MHz)		**LTE Band 2(10MHz)**	
Channel	**Frequency (MHz)**	**Channel**	**Frequency (MHz)**
18625	1852.5	18650	1855
18900	1880	18900	1880
19175	1907.5	19150	1905
LTE Band 2(15MHz)		**LTE Band 2(20MHz)**	
Channel	**Frequency (MHz)**	**Channel**	**Frequency (MHz)**
18675	1857.5	18700	1860
18900	1880	18900	1880
19125	1902.5	19100	1900

LTE Band 4(1.4MHz)		LTE Band 4(3MHz)	
Channel	**Frequency (MHz)**	**Channel**	**Frequency (MHz)**
19957	1710.7	19965	1711.5
20175	1732.5	20175	1732.5
20393	1754.3	20385	1753.5
LTE Band 4(5MHz)		**LTE Band 4(10MHz)**	
Channel	**Frequency (MHz)**	**Channel**	**Frequency (MHz)**
19975	1712.5	20000	1715
20175	1732.5	20175	1732.5
20375	1752.5	20350	1750
LTE Band 4(15MHz)		**LTE Band 4(20MHz)**	
Channel	**Frequency (MHz)**	**Channel**	**Frequency (MHz)**
20025	1717.5	20050	1720
20175	1732.5	20175	1732.5
20325	1747.5	20300	1745

LTE Band 5(1.4MHz)		LTE Band 5(3MHz)	
Channel	**Frequency (MHz)**	**Channel**	**Frequency (MHz)**
20407	824.7	20415	825.5
20525	836.5	20525	836.5
20643	848.3	20635	847.5
LTE Band 5(5MHz)		**LTE Band 5(10MHz)**	
Channel	**Frequency (MHz)**	**Channel**	**Frequency (MHz)**
20425	826.5	20450	829
20525	836.5	20525	836.5
20625	846.5	20600	844

LTE Band 7(5MHz)		LTE Band 7(10MHz)	
Channel	**Frequency (MHz)**	**Channel**	**Frequency (MHz)**
20775	2502.5	20800	2505
21100	2535	21100	2535
21425	2567.5	21400	2565
LTE Band 7(15MHz)		**LTE Band 7(20MHz)**	
Channel	**Frequency (MHz)**	**Channel**	**Frequency (MHz)**
20825	2507.5	20850	2510
21100	2535	21100	2535
21375	2562.5	21350	2560

LTE Band 12(1.4MHz)		LTE Band 12(3MHz)	
Channel	**Frequency (MHz)**	**Channel**	**Frequency (MHz)**
23017	699.7	23025	700.5
23095	707.5	23095	707.5
23173	715.3	23165	714.5
LTE Band 12(5MHz)		**LTE Band 12(10MHz)**	
Channel	**Frequency (MHz)**	**Channel**	**Frequency (MHz)**
23035	701.5	23060	704
23095	707.5	23095	707.5
23155	713.5	23130	711

LTE Band 17(5MHz)		LTE Band 17(10MHz)	
Channel	**Frequency (MHz)**	**Channel**	**Frequency (MHz)**
23755	706.5	23780	709
23790	710	23790	710
23825	713.5	23800	711

4.4 Test Mode

Test modes are chosen to be reported as the worst case configuration below:

Test Mode		
Band	**Radiated TCs**	**Conducted TCs**
LTE Band 2	QPSK Link (1.4MHz / 3MHz / 5MHz / 10MHz / 15MHz / 20MHz)	16QAM Link (1.4MHz / 3MHz / 5MHz / 10MHz / 15MHz / 20MHz)
LTE Band 4	QPSK Link (1.4MHz / 3MHz / 5MHz / 10MHz / 15MHz / 20MHz)	16QAM Link (1.4MHz / 3MHz / 5MHz / 10MHz / 15MHz / 20MHz)
LTE Band 5	QPSK Link (1.4MHz / 3MHz / 5MHz / 10MHz)	16QAM Link (1.4MHz / 3MHz / 5MHz / 10MHz)
LTE Band 7	QPSK Link (5MHz /10MHz / 15MHz / 20MHz)	16QAM Link (5MHz /10MHz / 15MHz / 20MHz)
LTE Band 12	QPSK Link (1.4MHz / 3MHz / 5MHz / 10MHz)	16QAM Link (1.4MHz / 3MHz / 5MHz / 10MHz)
LTE Band 17	QPSK Link (5MHz /10MHz)	16QAM Link (5MHz /10MHz)
Note 1: All modes and data rates and positions were investigated. Note 2: Both the SIM 1 and SIM 2 were tested, the worst mode is the SIM 1, the data recording in the report.		

Antenna port conducted and radiated test items were performed according to KDB 971168 D01 Power Meas License Digital Systems v03 with maximum output power.

EUT Cable List and Details

Cable Description	Length (M)	Shielded/Unshielded	With Core/Without Core
/	/	/	/
/	/	/	/

Auxiliary Equipment List and Details

Description	Manufacturer	Model	Serial Number
/	/	/	/

Special Cable List and Details

Cable Description	Length (M)	Shielded/Unshielded	With Core/Without Core
/	/	/	/

Radiated measurements were performed with rotating EUT in different three orthogonal test planes to find the maximum emission.

Test Items	Band	Bandwidth (MHz)						Modulation		RB #			Test Channel		
		1.4	3	5	10	15	20	QPSK	16QAM	1	Half	Full	L	M	H
Max.Output Power	2	v	v	v	v	v	v	v	v	v	v	v	v	v	v
	4	**v**	**v**	**v**	**v**	**v**	**v**	**v**	**v**	**v**	**v**	**v**	**v**	**v**	**v**
	5	**v**	**v**	**v**	**v**	**-**	**-**	**v**	**v**	**v**	**v**	**v**	**v**	**v**	**v**
	7	**-**	**-**	**v**	**v**	**v**	**v**	**v**	**v**	**v**	**v**	**v**	**v**	**v**	**v**
	12	**v**	**v**	**v**	**v**	**-**	**-**	**v**	**v**	**v**	**v**	**v**	**v**	**v**	**v**
	17	**-**	**-**	**v**	**v**	**-**	**-**	**v**	**v**	**v**	**v**	**v**	**v**	**v**	**v**
Peak-to-Average Ratio	2	v	v	v	v	v	v	v	v	v	v	v	v	v	v
	4	**v**	**v**	**v**	**v**	**v**	**v**	**v**	**v**	**v**	**v**	**v**	**v**	**v**	**v**
	5	**v**	**v**	**v**	**v**	**-**	**-**	**v**	**v**	**v**	**v**	**v**	**v**	**v**	**v**
	7			**v**	**v**	**v**	**v**	**v**	**v**	**v**	**v**	**v**	**v**	**v**	**v**
	12	**v**	**v**	**v**	**v**	**-**	**-**	**v**	**v**	**v**	**v**	**v**	**v**	**v**	**v**
	17			**v**	**v**			**v**	**v**	**v**	**v**	**v**	**v**	**v**	**v**
26dB and 99% Bandwidth	2	v	v	v	v	v	v	v	v	v	v	v	v	v	v
	4	**v**	**v**	**v**	**v**	**v**	**v**	**v**	**v**	**v**	**v**	**v**	**v**	**v**	**v**
	5	**v**	**v**	**v**	**v**	**-**	**-**	**v**	**v**	**v**	**v**	**v**	**v**	**v**	**v**
	7			**v**	**v**	**v**	**v**	**v**	**v**	**v**	**v**	**v**	**v**	**v**	**v**
	12	**v**	**v**	**v**	**v**	**-**	**-**	**v**	**v**	**v**	**v**	**v**	**v**	**v**	**v**
	17	**-**	**-**	**v**	**v**	**-**	**-**	**v**	**v**	**v**	**v**	**v**	**v**	**v**	**v**
Conducted Band Edge	2	v	v	v	v	v	v	v	v	v	v	v	v	-	v
	4	**v**	**v**	**v**	**v**	**v**	**v**	**v**	**v**	**v**	**v**	**v**	**v**	**-**	**v**
	5	**v**	**v**	**v**	**v**	**-**	**-**	**v**	**v**	**v**	**v**	**v**	**v**	**-**	**v**
	7			**v**	**v**	**v**	**v**	**v**	**v**	**v**	**v**	**v**	**v**	**v**	**v**
	12	**v**	**v**	**v**	**v**	**-**	**-**	**v**	**v**	**v**	**v**	**v**	**v**	**v**	**v**
	17			**v**	**v**			**v**	**v**	**v**	**v**	**v**	**v**	**v**	**v**
Conducted Spurious Emission	2	v	v	v	v	v	v	v	v	v	-	-	v	v	v
	4	**v**	**v**	**v**	**v**	**v**	**v**	**v**	**v**	**v**	**-**	**-**	**v**	**v**	**v**
	5	**v**	**v**	**v**	**v**	**-**	**-**	**v**	**v**	**v**	**-**	**-**	**v**	**v**	**v**
	7			**v**	**v**	**v**	**v**	**v**	**v**	**v**	**v**	**v**	**v**	**v**	**v**
	12	**v**	**v**	**v**	**v**	**-**	**-**	**v**	**v**	**v**	**v**	**v**	**v**	**v**	**v**
	17			**v**	**v**			**v**	**v**	**v**	**v**	**v**	**v**	**v**	**v**
Frequency tability	2	v	-	-	-	-	-	v	v	v	-	-	v	v	v
	4	**v**	**-**	**-**	**-**	**-**	**-**	**v**	**v**	**v**	**-**	**-**	**v**	**v**	**v**

	5	**v**	**-**	**-**	**-**	**-**	**-**	**v**	**v**	**v**	**-**	**-**	**v**	**v**	**v**
	7	**v**						**v**	**v**	**v**	**-**	**-**	**v**	**v**	**v**
	12	**v**	**-**	**-**	**-**	**-**	**-**	**v**	**v**	**v**	**-**	**-**	**v**	**v**	**v**
	17	**v**						**v**	**v**	**v**	**-**	**-**	**v**	**v**	**v**
E.R.P./ E.I.R.P.	2	v	v	v	v	v	v	v	v	v	v	v	v	v	v
	4	**v**	**v**	**v**	**v**	**v**	**v**	**v**	**v**	**v**	**v**	**v**	**v**	**v**	**v**
	5	**v**	**v**	**v**	**v**	**-**	**-**	**v**	**v**	**v**	**v**	**v**	**v**	**v**	**v**
	7			**v**	**v**			**v**	**v**	**v**	**v**	**v**	**v**	**v**	**v**
	12	**v**	**v**	**v**	**v**	**-**	**-**	**v**	**v**	**v**	**v**	**v**	**v**	**v**	**v**
	17	**-**	**-**	**v**	**v**	**-**	**-**	**v**	**v**	**v**	**v**	**v**	**v**	**v**	**v**
Radiated Spurious Emission	2	v	-	-	-	-	-	v	v	v	-	-	v	v	v
	4	**v**	**-**	**-**	**-**	**-**	**-**	**v**	**v**	**v**	**-**	**-**	**v**	**v**	**v**
	5	**v**	**-**	**-**	**-**	**-**	**-**	**v**	**v**	**v**	**-**	**-**	**v**	**v**	**v**
	7	**v**						**v**	**v**	**v**			**v**	**v**	**v**
	12	**v**	**-**	**-**	**-**	**-**	**-**	**v**	**v**	**v**	**-**	**-**	**v**	**v**	**v**
	17	**v**						**v**	**v**	**v**			**v**	**v**	**v**
Note	1.The mark “v “ means that this configuration is chosen for testing 2.The mark “-“ means that this bandwidth is not supported.														

4.5 Support Equipment

No.	Device Type	Brand	Model	Series No.	Note
E-1	Tablet	OUKITEL	RT3	N/A	EUT
E-2	Adapter	N/A	PS10UA050K2000UU	N/A	Auxiliary

Item	Shielded Type	Ferrite Core	Length	Note
C-1	N/A	N/A	1M	DC cable unshielded

Notes:
1. All the equipment/cables were placed in the worst-case configuration to maximize the emission during the test.
2. Grounding was established in accordance with the manufacturer's requirements and conditions for the intended use.

4.6 Measurement Results Explanation Example

For all conducted test items:
The offset level is set in the spectrum analyzer to compensate the RF cable loss and attenuator factor between RF conducted output port and spectrum analyzer. With the offset compensation, the spectrum analyzer reading level will be exactly the RF output level. The spectrum analyzer offset is derived from RF cable loss and attenuator factor. Offset = RF cable loss + attenuator factor.

5. Test Facility And Test Instrument Used

5.1 Test Facility

All measurement facilities used to collect the measurement data are located at Shenzhen BCTC Testing Co., Ltd. Address: 1-2/F., Building B, Pengzhou Industrial Park, No.158, Fuyuan 1st Road, Zhancheng, Fuhai Subdistrict, Bao'an District, Shenzhen, Guangdong, China. The site and apparatus are constructed in conformance with the requirements of ANSI C63.4 and CISPR 16-1-1 other equivalent standards.
FCC Test Firm Registration Number: 712850
IC Registered No.: 23583

5.2 Test Instrument Used

Radiated Emissions Test (966 Chamber01)					
Equipment	**Manufacturer**	**Model#**	**Serial#**	**Last Cal.**	**Next Cal.**
966 chamber	ChengYu	966 Room	966	Jun. 06. 2020	Jun. 05, 2023
Receiver	R&S	ESR3	102075	May 24, 2022	May 23, 2023
Receiver	R&S	ESRP	101154	May 24, 2022	May 23, 2023
Amplifier	SKET	LAPA_01G18G-45dB	\	May 24, 2022	May 23, 2023
Amplifier	Schwarzbeck	BBV9744	9744-0037	May 24, 2022	May 23, 2023
TRILOG Broadband Antenna	Schwarzbeck	VULB9163	942	May 26, 2022	May 25, 2023
Horn Antenna	Schwarzbeck	BBHA9120D	1541	Jun. 06, 2022	Jun. 05, 2023
Horn Antenna(18GHz-40GHz)	Schwarzbeck	BBHA9170	00822	Jun. 06, 2022	Jun. 05, 2023
Amplifier(18GHz-40GHz)	MITEQ	TTA1840-35-HG	2034381	May 26, 2022	May 25, 2023
Loop Antenna(9KHz-30MHz)	Schwarzbeck	FMZB1519B	00014	May 26, 2022	May 25, 2023
Power Metter	Keysight	E4419	\	May 26, 2022	May 25, 2023
Power Sensor (AV)	Keysight	E9300A	\	May 26, 2022	May 25, 2023
Signal Analyzer20kHz-26.5GHz	Keysight	N9020A	MY49100060	May 26, 2022	May 25, 2023
Spectrum Analyzer9kHz-40GHz	R&S	FSP40	\	May 26, 2022	May 25, 2023
Software	Frad	EZ-EMC	FA-03A2 RE	\	\

6. RF Output Power

6.1 Block Diagram Of Test Setup

Conducted output power test method:

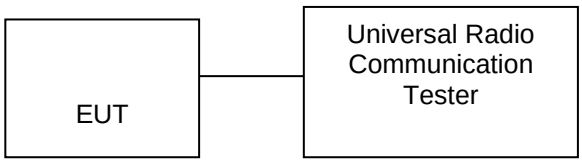

Radiated power test method:
（A）Radiated Emission Test-Up Frequency Below 30MHz

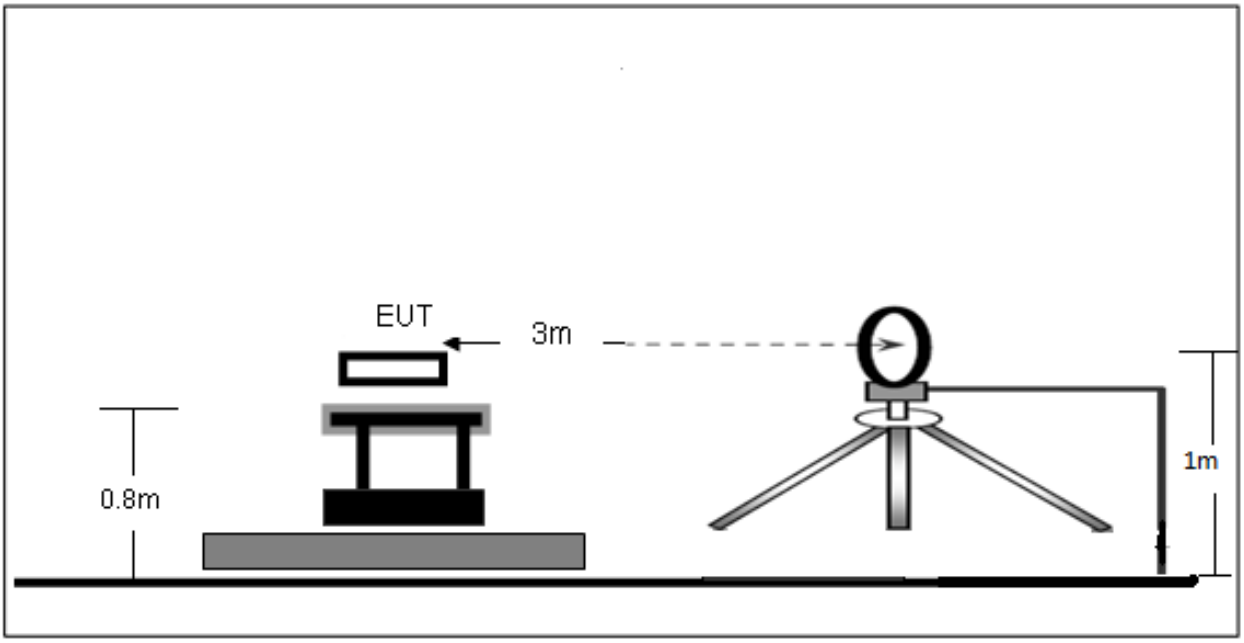

（B）Radiated Emission Test-Up Frequency 30MHz~1GHz

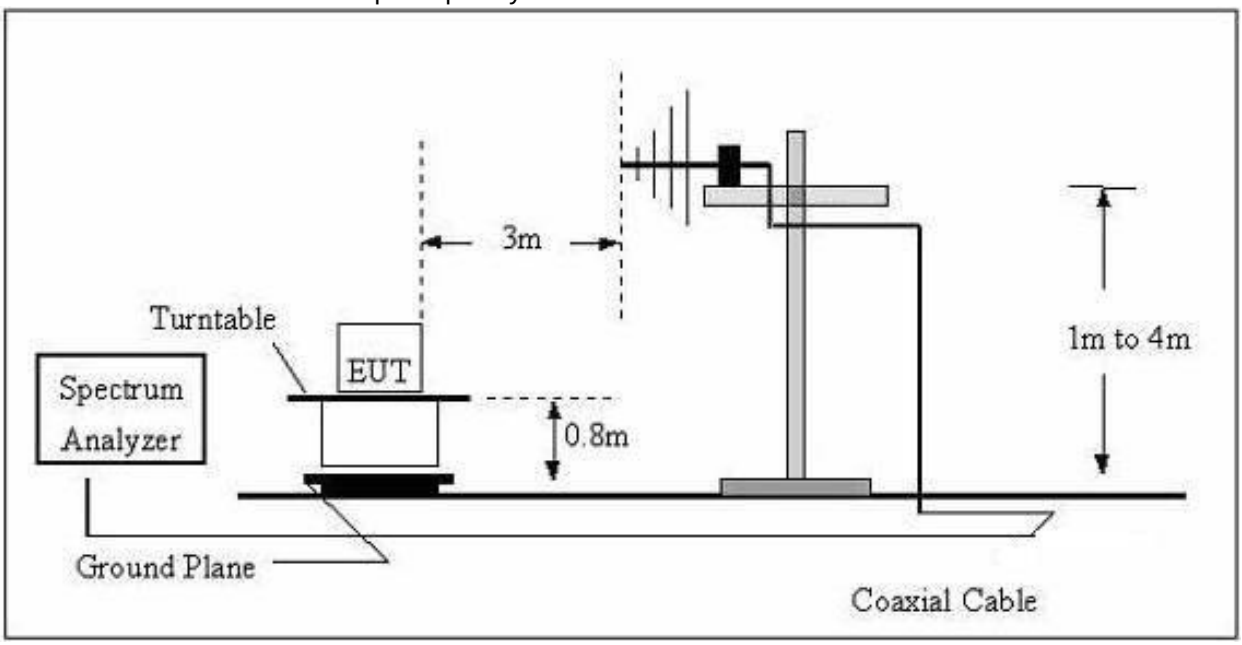

（C）Radiated Emission Test-Up Frequency Above 1GHz

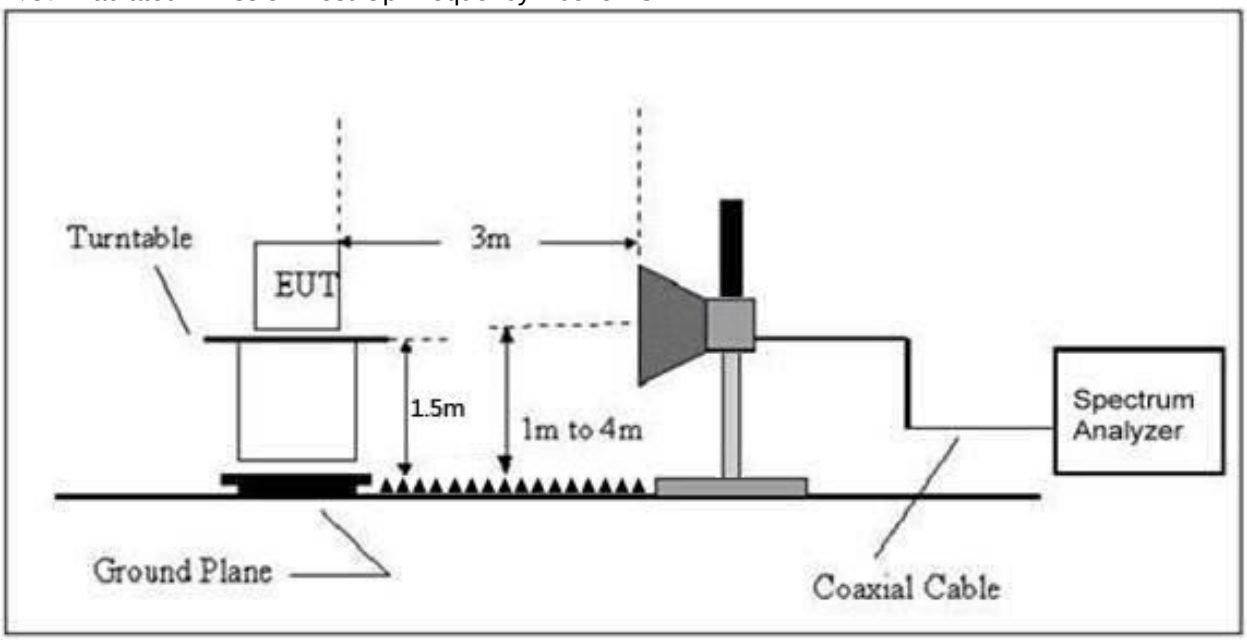

6.2 Limit

According to §22.913(a)(2),The ERP of mobileand portable stations transmitters and auxiliary test transmitters must not exceed 7 Watts.

According to §24.232 (c), Mobile and portable stations are limited to 2 watts EIRP and the equipment must employ a means for limiting power to the minimum necessary for successful communications.

According to §27.50(d)(4), Fixed, mobile, and portable (hand-held) stations operating in the 1710-1755 MHz band and mobile and portable stations operating in the 1695-1710 MHz and 1755-1780 MHz bands are limited to 1 watt EIRP.

6.3 Test procedure

Radiated power test method:

1.The setup of EUT is according with per ANSI/TIA Standard 603D and ANSI C63.4-2014 measurement procedure.

2. The measurement antenna was placed at a distance of 3 meters from the EUT. During the tests, the antenna height and polarization as well as EUT azimuth were varied in order to identify the maximum level of emissions from the EUT. The test was performed by placing the EUT on 3-orthogonal axis.

3. The frequency range up to tenth harmonic of the fundamental frequency was investigated.

4. Remove the EUT and replace it with substitution antenna. A signal generator was connected to the substitution antenna by a non-radiating cable. The absolute levels of the spurious emissions were measured by the substitution.

6.4 Test Result

Max Radiated Power:
FDD-LTE Band 2

Channel Bandwidth: 1.4MHz			
Modulation	**Channel**	**E.I.R.P(dBm)**	**Verdict**
QPSK	LCH	22.66	PASS
	MCK	22.88	PASS
	HCH	23.06	PASS
16QAM	LCH	21.76	PASS
	MCK	21.9	PASS
	HCH	22.17	PASS
Channel Bandwidth: 3MHz			
Modulation	**Channel**	**E.I.R.P(dBm)**	**Verdict**
QPSK	LCH	22.84	PASS
	MCK	22.9	PASS
	HCH	23.13	PASS
16QAM	LCH	21.63	PASS
	MCK	22.31	PASS
	HCH	22.38	PASS
Channel Bandwidth: 5MHz			
Modulation	**Channel**	**E.I.R.P(dBm)**	**Verdict**
QPSK	LCH	22.84	PASS
	MCK	22.78	PASS
	HCH	23.13	PASS
16QAM	LCH	22.17	PASS
	MCK	22.54	PASS
	HCH	22.5	PASS
Channel Bandwidth: 10MHz			
Modulation	**Channel**	**E.I.R.P(dBm)**	**Verdict**
QPSK	LCH	22.95	PASS
	MCK	23.01	PASS
	HCH	23.15	PASS
16QAM	LCH	22.05	PASS
	MCK	21.78	PASS
	HCH	22.52	PASS
Channel Bandwidth: 15MHz			
Modulation	**Channel**	**E.I.R.P(dBm)**	**Verdict**
QPSK	LCH	23.09	PASS
	MCK	23.06	PASS
	HCH	23.24	PASS
16QAM	LCH	22.26	PASS
	MCK	22.12	PASS
	HCH	22.48	PASS
Channel Bandwidth: 20MHz			
Modulation	**Channel**	**E.I.R.P(dBm)**	**Verdict**
QPSK	LCH	23.64	PASS
	MCK	23.16	PASS
	HCH	23.23	PASS
16QAM	LCH	22.89	PASS
	MCK	22.35	PASS
	HCH	22.4	PASS

FDD-LTE Band 4

Channel Bandwidth: 1.4MHz			
Modulation	**Channel**	**E.I.R.P(dBm)**	**Verdict**
QPSK	LCH	23.61	PASS
	MCK	24.06	PASS
	HCH	23.7	PASS
16QAM	LCH	22.78	PASS
	MCK	23.01	PASS
	HCH	22.75	PASS
Channel Bandwidth: 3MHz			
Modulation	**Channel**	**E.I.R.P(dBm)**	**Verdict**
QPSK	LCH	23.84	PASS
	MCK	24.15	PASS
	HCH	23.96	PASS
16QAM	LCH	23.27	PASS
	MCK	23.44	PASS
	HCH	22.77	PASS
Channel Bandwidth: 5MHz			
Modulation	**Channel**	**E.I.R.P(dBm)**	**Verdict**
QPSK	LCH	23.83	PASS
	MCK	24.23	PASS
	HCH	23.85	PASS
16QAM	LCH	23.31	PASS
	MCK	23.6	PASS
	HCH	23.26	PASS
Channel Bandwidth: 10MHz			
Modulation	**Channel**	**E.I.R.P(dBm)**	**Verdict**
QPSK	LCH	23.77	PASS
	MCK	24.12	PASS
	HCH	23.7	PASS
16QAM	LCH	22.9	PASS
	MCK	22.87	PASS
	HCH	23.05	PASS
Channel Bandwidth: 15MHz			
Modulation	**Channel**	**E.I.R.P(dBm)**	**Verdict**
QPSK	LCH	23.89	PASS
	MCK	24.13	PASS
	HCH	24.02	PASS
16QAM	LCH	23.22	PASS
	MCK	23.24	PASS
	HCH	22.96	PASS
Channel Bandwidth: 20MHz			
Modulation	**Channel**	**E.I.R.P(dBm)**	**Verdict**
QPSK	LCH	23.8	PASS
	MCK	24.1	PASS
	HCH	23.79	PASS
16QAM	LCH	23.06	PASS
	MCK	23.26	PASS
	HCH	23.03	PASS

FDD-LTE Band 5

Channel Bandwidth: 1.4MHz			
Modulation	**Channel**	**E.R.P(dBm)**	**Verdict**
QPSK	LCH	23.7	PASS
	MCK	23.7	PASS
	HCH	23.4	PASS
16QAM	LCH	22.72	PASS
	MCK	22.84	PASS
	HCH	22.42	PASS
Channel Bandwidth: 3MHz			
Modulation	**Channel**	**E.R.P(dBm)**	**Verdict**
QPSK	LCH	23.82	PASS
	MCK	24.06	PASS
	HCH	23.68	PASS
16QAM	LCH	23.18	PASS
	MCK	23.07	PASS
	HCH	22.39	PASS
Channel Bandwidth: 5MHz			
Modulation	**Channel**	**E.R.P(dBm)**	**Verdict**
QPSK	LCH	23.85	PASS
	MCK	23.94	PASS
	HCH	23.66	PASS
16QAM	LCH	23.31	PASS
	MCK	23.18	PASS
	HCH	22.94	PASS
Channel Bandwidth: 10MHz			
Modulation	**Channel**	**E.R.P(dBm)**	**Verdict**
QPSK	LCH	23.67	PASS
	MCK	23.75	PASS
	HCH	23.58	PASS
16QAM	LCH	23.07	PASS
	MCK	22.88	PASS
	HCH	22.28	PASS

FDD-LTE Band 7

Channel Bandwidth: 5MHz			
Modulation	**Channel**	**E.R.P(dBm)**	**Verdict**
QPSK	LCH	23.32	PASS
	MCK	22.74	PASS
	HCH	22.74	PASS
16QAM	LCH	23.13	PASS
	MCK	22.98	PASS
	HCH	22.68	PASS
Channel Bandwidth: 10MHz			
Modulation	**Channel**	**E.R.P(dBm)**	**Verdict**
QPSK	LCH	23.59	PASS
	MCK	22.47	PASS
	HCH	23.23	PASS
16QAM	LCH	22.86	PASS
	MCK	22.11	PASS
	HCH	22.8	PASS
Channel Bandwidth: 15MHz			
Modulation	**Channel**	**E.R.P(dBm)**	**Verdict**
QPSK	LCH	23.72	PASS
	MCK	22.25	PASS
	HCH	22.87	PASS
16QAM	LCH	22.91	PASS
	MCK	22.14	PASS
	HCH	22.63	PASS
Channel Bandwidth: 20MHz			
Modulation	**Channel**	**E.R.P(dBm)**	**Verdict**
QPSK	LCH	23.48	PASS
	MCK	21.92	PASS
	HCH	22.68	PASS
16QAM	LCH	22.45	PASS
	MCK	21.96	PASS
	HCH	22.47	PASS

FDD-LTE Band 12

Channel Bandwidth: 1.4MHz			
Modulation	**Channel**	**E.R.P(dBm)**	**Verdict**
QPSK	LCH	20.52	PASS
	MCK	20.52	PASS
	HCH	20.3	PASS
16QAM	LCH	19.65	PASS
	MCK	19.51	PASS
	HCH	19.38	PASS
Channel Bandwidth: 3MHz			
Modulation	**Channel**	**E.R.P(dBm)**	**Verdict**
QPSK	LCH	20.49	PASS
	MCK	20.56	PASS
	HCH	20.36	PASS
16QAM	LCH	19.92	PASS
	MCK	19.9	PASS
	HCH	19.09	PASS
Channel Bandwidth: 5MHz			
Modulation	**Channel**	**E.R.P(dBm)**	**Verdict**
QPSK	LCH	20.68	PASS
	MCK	20.43	PASS
	HCH	20.44	PASS
16QAM	LCH	19.93	PASS
	MCK	19.89	PASS
	HCH	19.88	PASS
Channel Bandwidth: 10MHz			
Modulation	**Channel**	**E.R.P(dBm)**	**Verdict**
QPSK	LCH	20.47	PASS
	MCK	20.43	PASS
	HCH	20.29	PASS
16QAM	LCH	19.33	PASS
	MCK	19.81	PASS
	HCH	19.47	PASS

FDD-LTE Band 17

Channel Bandwidth: 5MHz			
Modulation	**Channel**	**E.R.P(dBm)**	**Verdict**
QPSK	LCH	20.81	PASS
	MCK	20.56	PASS
	HCH	20.57	PASS
16QAM	LCH	20.34	PASS
	MCK	19.72	PASS
	HCH	19.87	PASS
Channel Bandwidth: 10MHz			
Modulation	**Channel**	**E.R.P(dBm)**	**Verdict**
QPSK	LCH	20.58	PASS
	MCK	20.56	PASS
	HCH	20.51	PASS
16QAM	LCH	19.64	PASS
	MCK	19.41	PASS
	HCH	19.92	PASS

Max Conducted output Power:
Please refer to appendix A: Conducted Output Power
Test Result: Pass

7. Peak-To-Average Ratio(PAR) Of Transmitter

7.1 Block Diagram Of Test Setup

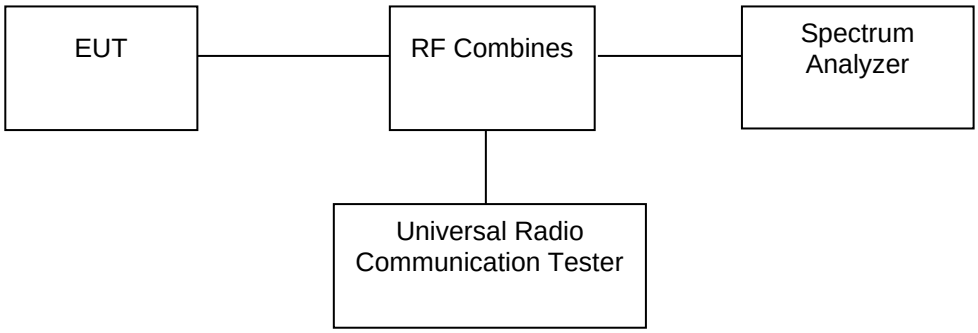

7.2 Limit

According to §24.232(d), Power measurements for transmissions by stations authorized under this section may be made either in accordance with a Commission-approved average power technique or in compliance with paragraph (e) of this section. In both instances, equipment employed must be authorized in accordance with the provisions of §24.51. In measuring transmissions in this band using an average power technique, the peak-to-average ratio (PAR) of the transmission may not exceed 13 dB.

According to §27.50(B), the peak-to-average power ratio (PAPR) of the transmitter output power must not exceed 13 dB. The PAPR measurements should be made using either an instrument with complementary cumulative distribution function (CCDF) capabilities to determine that PAPR will not exceed 13 dB for more than 0.1 percent of the time or other Commission approved procedure. The measurement must be performed using a signal corresponding to the highest PAPR expected during periods of continuous transmission.

7.3 Test procedure

The RF output terminal of the transmitter was connected to the input of the spectrum analyzer via a suitable attenuation. The RBW of the spectrum analyzer was set to 30kHz and the peak-to-average ratio (PAR) of the transmission was recorded.Record the maximum PAPR level associated with a probability of 0.1%.

7.4 Test Result

Please refer to Appendix 3: Peak-to-Average Ratio
Test Result: Pass

8. Emission Bandwidth

8.1 Block Diagram Of Test Setup

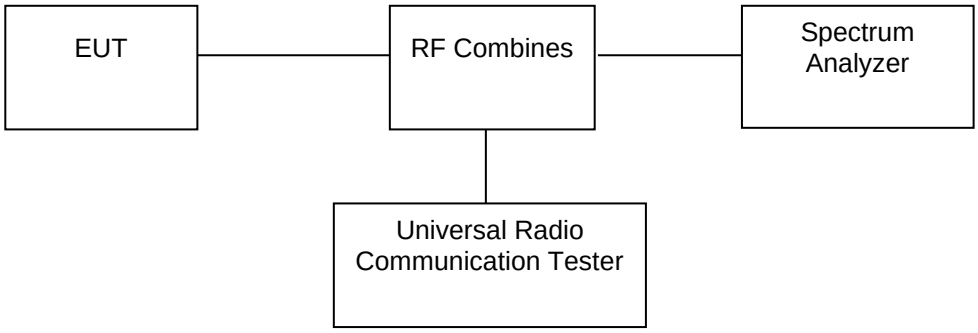

8.2 Standard Applicable

According to §22.917(b),The emission bandwidth is defined as the width of the signal between two points, one below the carrier center frequency and one above the carrier center frequency, outside of which all emissions are attenuated at least 26 dB below the transmitter power.

According to §24.238(b), The emission bandwidth is defined as the width of the signal between two points, one below the carrier center frequency and one above the carrier center frequency, outside of which all emissions are attenuated at least 26 dB below the transmitter power.

According to §27.53, The emission bandwidth is defined as the width of the signal between two points, one below the carrier center frequency and one above the carrier center frequency, outside of which all emissions are attenuated at least 26 dB below the transmitter power.

8.3 Test procedure

1. The testing follows FCC KDB 971168 D01v03 Section 4.2.
2. The EUT was connected to the spectrum analyzer and system simulator via a power divider.
3. The RF output of the EUT was connected to the spectrum analyzer by RF cable and attenuator.The path loss was compensated to the results for each measurement.
4. The 99% occupied bandwidth were measured, set RBW= 1% of OBW, VBW= 3*RBW, sample detector, trace maximum hold.
5. The 26dB bandwidth were measured, set RBW= 1% of EBW, VBW= 3*RBW, peak detector, trace maximum hold.

8.4 Test Result

Please refer to Appendix 4: Occupied BandWidth
Test Result: Pass

9. Out of Band Emissions at Antenna Terminal

9.1 Block Diagram Of Test Setup

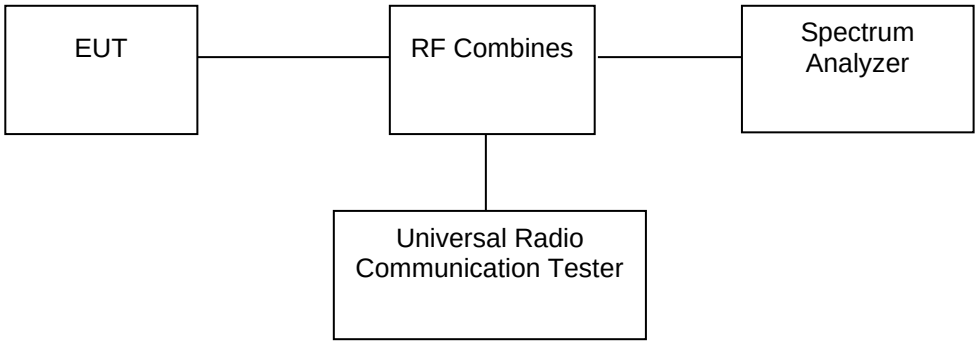

9.2 Limit

According to §22.917(a), the power of any emissions outside of the authorized operating frequency ranges must be attenuated below the transmitting power (P) by a factor of at least 43 + 10 log(P) dB.

According to §24.238(a), the power of any emissions outside of the authorized operating frequency ranges must be attenuated below the transmitting power (P) by a factor of at least 43 + 10 log(P) dB.

According to §27.53 (h), the power of any emission outside a licensee's frequency block shall be attenuated below the transmitter power (P) in watts by at least 43 + 10 log10 (P) dB.

9.3 Test procedure

The RF output terminal of the transmitter was connected to the input of the spectrum analyzer via a suitable attenuation. The RBW of the spectrum analyzer was set to 100kHz and 1MHz for the scan frequency from 30MHz to 1GHz and the scan frequency from 1GHz to up to 10th harmonic.

9.4 Test Result

Please refer to Appendix 5: Band Edge & Appendix 6: Out-of-band Emissions
Test Result: Pass

10. Spurious Radiated Emissions

10.1 Block Diagram Of Test Setup

（A）Radiated Emission Test-Up Frequency Below 30MHz

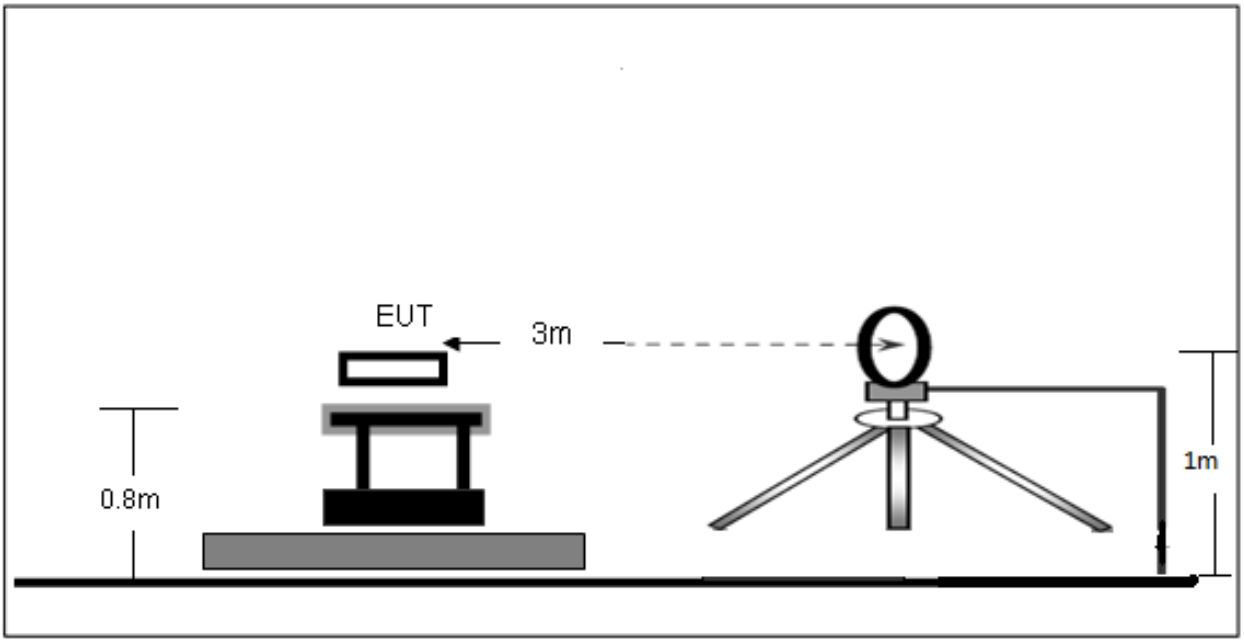

（B）Radiated Emission Test-Up Frequency 30MHz~1GHz

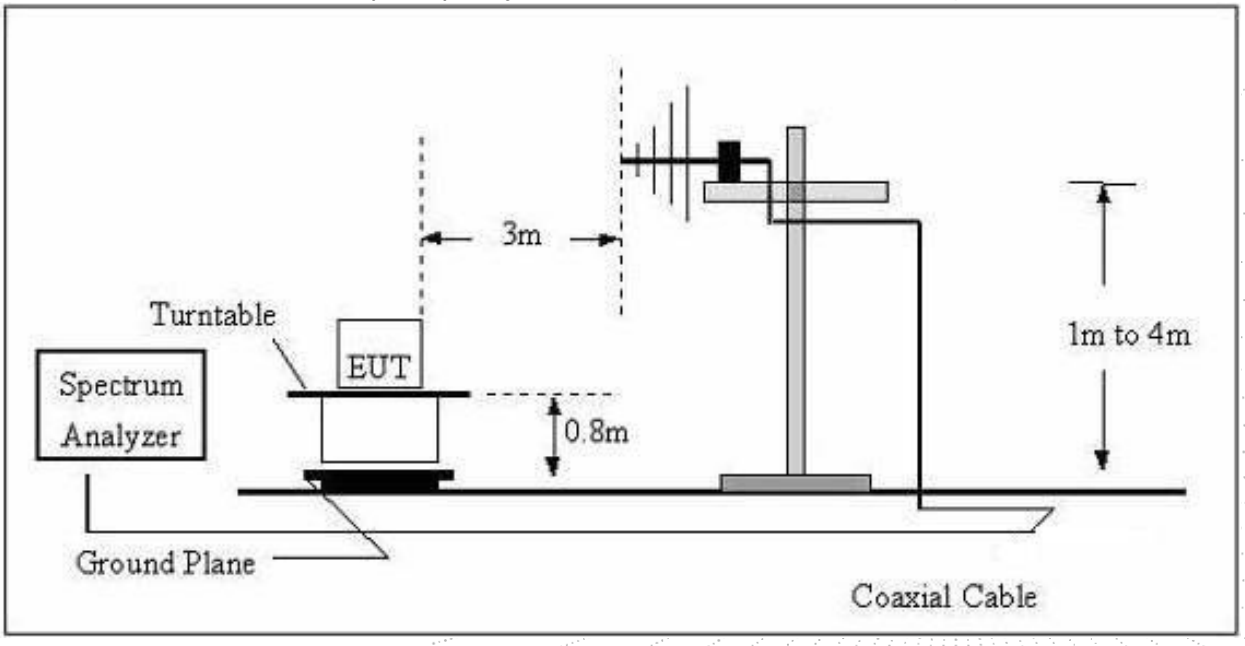

（C）Radiated Emission Test-Up Frequency Above 1GHz

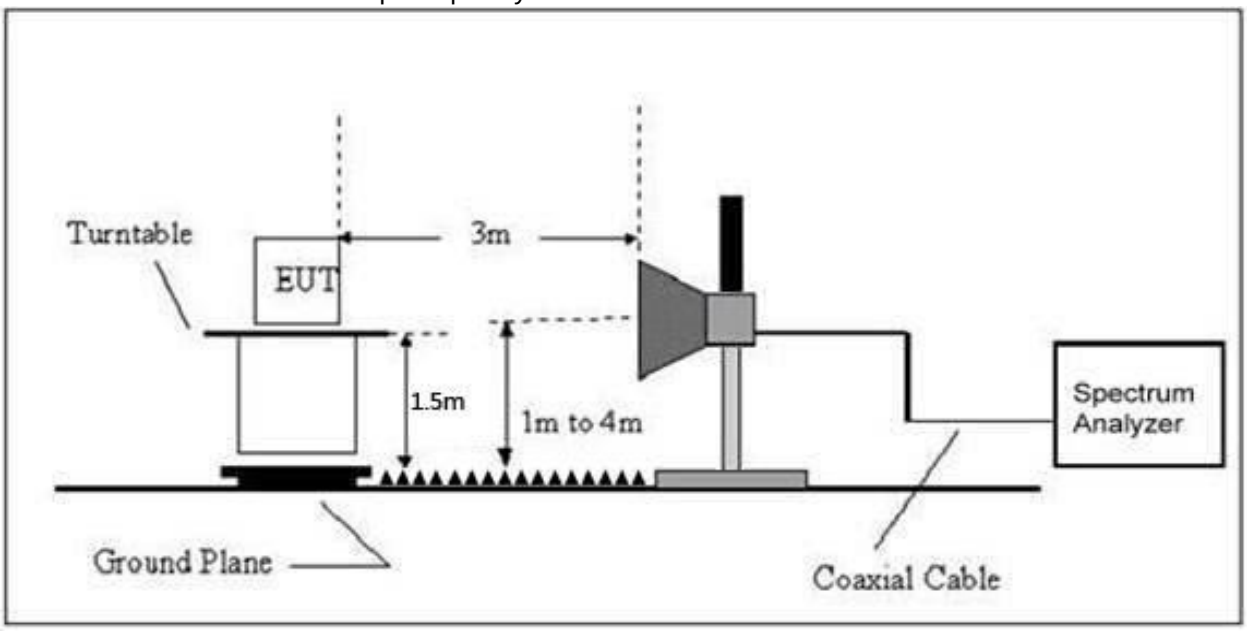

10.2 Limit

According to §22.917(a), the power of any emissions outside of the authorized operating frequency ranges must be attenuated below the transmitting power (P) by a factor of at least 43 + 10 log(P) dB.

According to §24.238(a), the power of any emissions outside of the authorized operating frequency ranges must be attenuated below the transmitting power (P) by a factor of at least 43 + 10 log(P) dB.

According to §27.53 (h), the power of any emission outside a licensee's frequency block shall be attenuated below the transmitter power (P) in watts by at least 43 + 10 log10 (P) dB.

10.3 Test procedure

1. The setup of EUT is according with per ANSI/TIA Standard 603D and ANSI C63.4-2014 measurement procedure.
2. The measurement antenna was placed at a distance of 3 meters from the EUT. During the tests, the antenna height and polarization as well as EUT azimuth were varied in order to identify the maximum level of emissions from the EUT. The test was performed by placing the EUT on 3-orthogonal axis.
3. The frequency range up to tenth harmonic of the fundamental frequency was investigated.
4. Remove the EUT and replace it with substitution antenna. A signal generator was connected to the substitution antenna by a non-radiating cable. The absolute levels of the spurious emissions were measured by the substitution.

Spurious attenuation limit in dB
=43+10 Log_{10} (power out in Watts)

10.4 Test Result

For FDD-LTE Band 2 Mode

Frequency (MHz)	Reading (dBm)	Correct dB	Result (dBm)	Limit (dBm)	Margin (dB)	Polar H/V
Low Channel (1852.5MHz)						
85.16	-42.61	-15.92	-58.53	-13.00	-45.53	H
3700.40	-21.85	-22.93	-44.78	-13.00	-31.78	H
5550.60	-24.02	-22.45	-46.47	-13.00	-33.47	H
85.16	-43.68	-15.92	-59.61	-13.00	-46.61	V
3700.40	-20.34	-22.93	-43.27	-13.00	-30.27	V
5550.60	-25.29	-22.45	-47.74	-13.00	-34.74	V
Middle Channel (1880MHz)						
85.16	-41.27	-15.92	-57.20	-13.00	-44.20	H
3760.00	-18.22	-22.87	-41.09	-13.00	-28.09	H
5640.00	-24.49	-22.50	-46.99	-13.00	-33.99	H
85.16	-44.05	-15.92	-59.97	-13.00	-46.97	V
3760.00	-21.69	-22.87	-44.56	-13.00	-31.56	V
5640.00	-25.32	-22.50	-47.82	-13.00	-34.82	V
High Channel (1907.5MHz)						
85.16	-41.84	-15.92	-57.76	-13.00	-44.76	H
3819.60	-19.44	-22.79	-42.23	-13.00	-29.23	H
5729.40	-24.42	-22.56	-46.98	-13.00	-33.98	H
85.16	-41.15	-15.92	-57.07	-13.00	-44.07	V
3819.60	-20.74	-22.79	-43.53	-13.00	-30.53	V
5729.40	-23.65	-22.56	-46.21	-13.00	-33.21	V

For FDD-LTE Band 4 Mode

Frequency (MHz)	Reading (dBm)	Correct dB	Result (dBm)	Limit (dBm)	Margin (dB)	Polar H/V
Low Channel (1710.7MHz)						
77.41	-43.48	-15.92	-59.40	-13.00	-46.40	H
3421.40	-26.82	-17.47	-44.29	-13.00	-31.29	H
5132.10	-30.00	-11.76	-41.76	-13.00	-28.76	H
77.41	-42.29	-15.92	-58.22	-13.00	-45.22	V
3421.40	-28.04	-17.47	-45.51	-13.00	-32.51	V
5132.10	-31.86	-11.76	-43.62	-13.00	-30.62	V
Middle Channel (1732.5MHz)						
77.41	-41.16	-15.92	-57.09	-13.00	-44.09	H
3465.00	-25.81	-16.98	-42.79	-13.00	-29.79	H
5197.50	-32.98	-11.33	-44.31	-13.00	-31.31	H
77.41	-42.19	-15.92	-58.12	-13.00	-45.12	V
3465.00	-27.23	-16.98	-44.21	-13.00	-31.21	V
5197.50	-28.05	-11.33	-39.38	-13.00	-26.38	V
High Channel (1754.3MHz)						
77.41	-44.00	-15.92	-59.92	-13.00	-46.92	H
3508.60	-25.80	-16.49	-42.29	-13.00	-29.29	H
5262.90	-32.13	-10.90	-43.03	-13.00	-30.03	H
77.41	-41.19	-15.92	-57.11	-13.00	-44.11	V
3508.60	-27.91	-16.49	-44.40	-13.00	-31.40	V
5262.90	-29.78	-10.90	-40.68	-13.00	-27.68	V

For FDD-LTE Band 5 Mode

Frequency (MHz)	Reading (dBm)	Correct dB	Result (dBm)	Limit (dBm)	Margin (dB)	Polar H/V
Low Channel (824.7MHz)						
66.39	-42.10	-15.92	-58.02	-13.00	-45.02	H
1649.40	-26.15	-17.47	-43.62	-13.00	-30.62	H
2474.10	-32.75	-11.76	-44.51	-13.00	-31.51	H
66.39	-42.27	-15.92	-58.20	-13.00	-45.20	V
1649.40	-28.81	-17.47	-46.28	-13.00	-33.28	V
2474.10	-28.42	-11.76	-40.18	-13.00	-27.18	V
Middle Channel (836.5MHz)						
66.39	-44.18	-15.92	-60.10	-13.00	-47.10	H
1673.00	-27.99	-16.98	-44.97	-13.00	-31.97	H
2509.50	-31.68	-11.33	-43.01	-13.00	-30.01	H
66.39	-42.46	-15.92	-58.38	-13.00	-45.38	V
1673.00	-28.08	-16.98	-45.06	-13.00	-32.06	V
2509.50	-29.45	-11.33	-40.78	-13.00	-27.78	V
High Channel (848.3MHz)						
66.39	-41.70	-15.92	-57.62	-13.00	-44.62	H
1696.60	-27.22	-16.49	-43.71	-13.00	-30.71	H
2544.90	-31.39	-10.90	-42.29	-13.00	-29.29	H
66.39	-43.62	-15.92	-59.54	-13.00	-46.54	V
1696.60	-26.85	-16.49	-43.34	-13.00	-30.34	V
2544.90	-29.33	-10.90	-40.23	-13.00	-27.23	V

For FDD-LTE Band 7 Mode

Frequency (MHz)	Reading (dBm)	Correct dB	Result (dBm)	Limit (dBm)	Margin (dB)	Polar H/V
Low Channel (2502.5MHz)						
82.44	-41.82	-15.92	-57.75	-13.00	-44.75	H
5005.00	-25.99	-17.47	-43.46	-13.00	-30.46	H
7507.50	-32.95	-11.76	-44.71	-13.00	-31.71	H
82.44	-43.22	-15.92	-59.14	-13.00	-46.14	V
5005.00	-26.50	-17.47	-43.97	-13.00	-30.97	V
7507.50	-31.79	-11.76	-43.55	-13.00	-30.55	V
Middle Channel (2535MHz)						
82.44	-43.08	-15.92	-59.00	-13.00	-46.00	H
5070.00	-25.71	-16.98	-42.69	-13.00	-29.69	H
7605.00	-31.94	-11.33	-43.27	-13.00	-30.27	H
82.44	-44.69	-15.92	-60.61	-13.00	-47.61	V
5070.00	-27.16	-16.98	-44.14	-13.00	-31.14	V
7605.00	-31.43	-11.33	-42.76	-13.00	-29.76	V
High Channel (2567.5MHz)						
82.44	-42.28	-15.92	-58.20	-13.00	-45.20	H
5135.00	-27.25	-16.49	-43.74	-13.00	-30.74	H
7702.50	-29.41	-10.90	-40.31	-13.00	-27.31	H
82.44	-42.01	-15.92	-57.93	-13.00	-44.93	V
5135.00	-27.95	-16.49	-44.44	-13.00	-31.44	V
7702.50	-29.97	-10.90	-40.87	-13.00	-27.87	V

For FDD-LTE Band 12 Mode

Frequency (MHz)	Reading (dBm)	Correct dB	Result (dBm)	Limit (dBm)	Margin (dB)	Polar H/V
Low Channel (699.7MHz)						
90.32	-41.73	-15.92	-57.65	-13.00	-44.65	H
1399.40	-25.09	-17.47	-42.56	-13.00	-29.56	H
2099.10	-29.75	-11.76	-41.51	-13.00	-28.51	H
90.32	-44.69	-15.92	-60.61	-13.00	-47.61	V
1399.40	-26.67	-17.47	-44.14	-13.00	-31.14	V
2099.10	-31.42	-11.76	-43.18	-13.00	-30.18	V
Middle Channel (707.5MHz)						
90.32	-41.53	-15.92	-57.45	-13.00	-44.45	H
1415.00	-27.74	-16.98	-44.72	-13.00	-31.72	H
2122.50	-32.40	-11.33	-43.73	-13.00	-30.73	H
90.32	-44.96	-15.92	-60.89	-13.00	-47.89	V
1415.00	-29.13	-16.98	-46.11	-13.00	-33.11	V
2122.50	-31.80	-11.33	-43.13	-13.00	-30.13	V
High Channel (715.3MHz)						
90.32	-43.50	-15.92	-59.42	-13.00	-46.42	H
1430.60	-26.16	-16.49	-42.65	-13.00	-29.65	H
2145.90	-31.96	-10.90	-42.86	-13.00	-29.86	H
90.32	-41.66	-15.92	-57.58	-13.00	-44.58	V
1430.60	-28.88	-16.49	-45.37	-13.00	-32.37	V
2145.90	-30.75	-10.90	-41.65	-13.00	-28.65	V

For FDD-LTE Band 17 Mode

Frequency (MHz)	Reading (dBm)	Correct dB	Result (dBm)	Limit (dBm)	Margin (dB)	Polar H/V
Low Channel (706.5MHz)						
77.58	-43.99	-15.92	-59.91	-13.00	-46.91	H
1413.00	-27.16	-17.47	-44.63	-13.00	-31.63	H
2119.50	-29.82	-11.76	-41.58	-13.00	-28.58	H
77.58	-42.45	-15.92	-58.37	-13.00	-45.37	V
1413.00	-26.24	-17.47	-43.71	-13.00	-30.71	V
2119.50	-31.29	-11.76	-43.05	-13.00	-30.05	V
Middle Channel (710MHz)						
77.58	-43.08	-15.92	-59.01	-13.00	-46.01	H
1420.00	-25.68	-16.98	-42.66	-13.00	-29.66	H
2130.00	-30.29	-11.33	-41.62	-13.00	-28.62	H
77.58	-41.49	-15.92	-57.42	-13.00	-44.42	V
1420.00	-27.08	-16.98	-44.06	-13.00	-31.06	V
2130.00	-31.26	-11.33	-42.59	-13.00	-29.59	V
High Channel (713.5MHz)						
77.58	-43.65	-15.92	-59.57	-13.00	-46.57	H
1427.00	-25.18	-16.49	-41.67	-13.00	-28.67	H
2140.50	-29.79	-10.90	-40.69	-13.00	-27.69	H
77.58	-41.83	-15.92	-57.75	-13.00	-44.75	V
1427.00	-27.69	-16.49	-44.18	-13.00	-31.18	V
2140.50	-31.89	-10.90	-42.79	-13.00	-29.79	V

Note: Result=Reading+ Correct, Margin= Result- Limit
Note: Testing is carried out with frequency rang 9kHz to the tenth harmonics, other than listedin the table above are attenuated more than 20dB below the permissible limits or the field strength is too small to be measured.

11. Frequency Stability

11.1 Block Diagram Of Test Setup

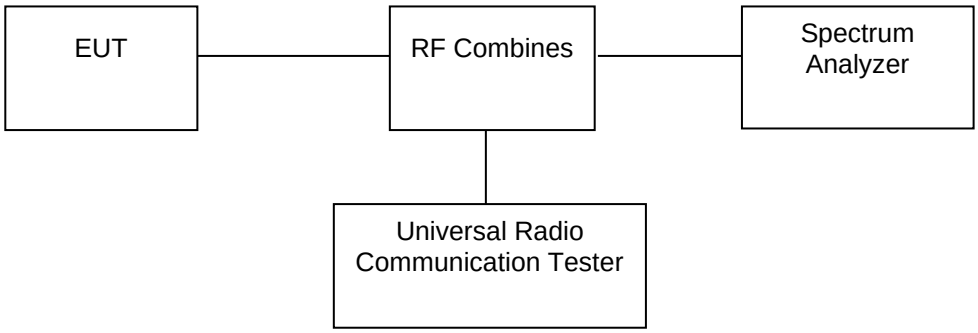

11.2 Limit

±2.5 ppm

11.3 Test procedure

Test Procedures for Temperature Variation
1. The testing follows FCC KDB 971168 D01v03 Section 9.0.
2. The EUT was set up in the thermal chamber and connected with the system simulator.
3. With power OFF, the temperature was decreased to -30°C and the EUT was stabilized before testing. Power was applied and the maximum change in frequency was recorded within one minute.
4. With power OFF, the temperature was raised in 10°C steps up to 50°C. The EUT was stabilized at each step for at least half an hour. Power was applied and the maximum frequency change was recorded within one minute.

Test Procedures for Voltage Variation
1. The testing follows FCC KDB 971168 D01v03 Section 9.0.
2. The EUT was placed in a temperature chamber at 25±5° C and connected with the system simulator.
3. The power supply voltage to the EUT was varied from BEP to 115% of the nominal value measured at the input to the EUT.
4. The variation in frequency was measured for the worst case.
5. The worst case(worst bandwidth) for frequency stability reported in the Test Data.
   The worst bandwidth is as follow:
   1.4M is for LTE Band 2, 1.4M is for LTE Band 4,
   1.4M is for LTE Band 5, 1.4M is for LTE Band 12,
   5M is for LTE Band 13, 1.4M is for LTE Band 66, 5M is for LTE Band 71

11.4 Test Result

Please refer to Appendix 2: Frequency Stability
Test Result: Pass

12. EUT Photographs

EUT Photo 1

EUT Photo 2

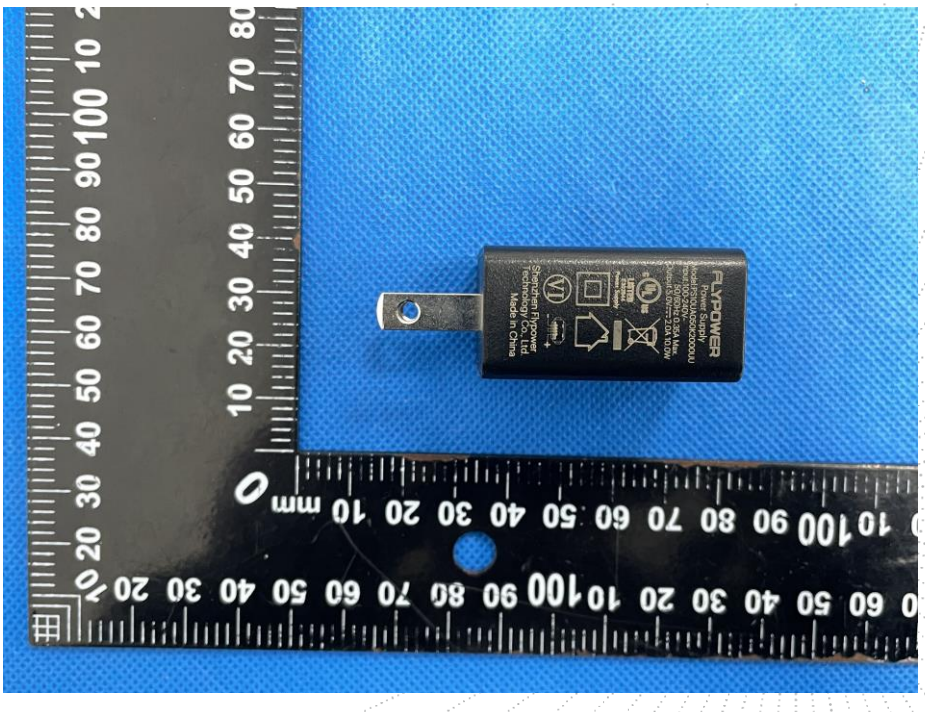

13. EUT Test Setup Photographs

Radiated Measurement Photos

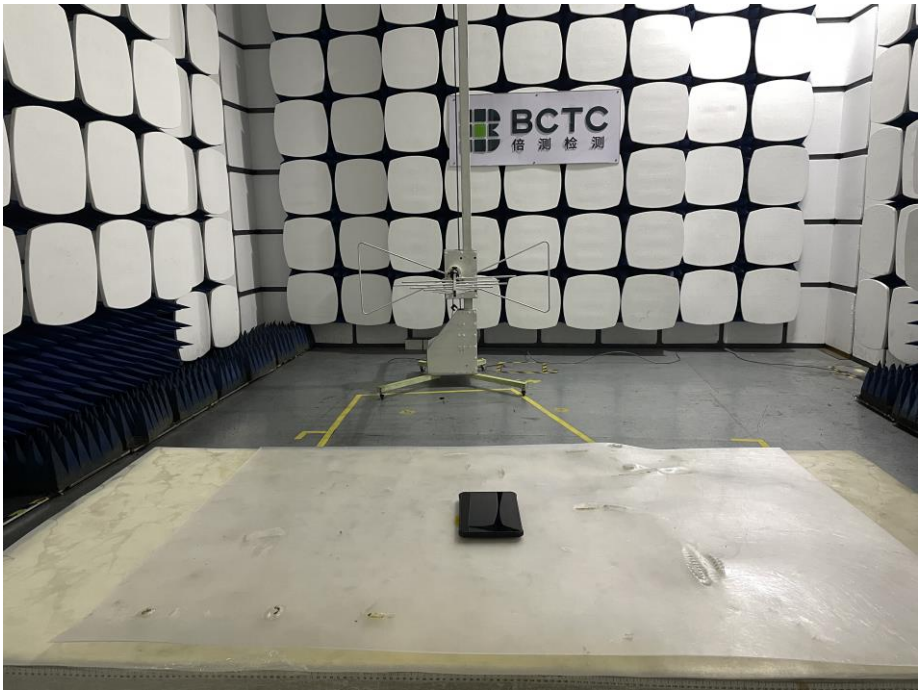

STATEMENT

1. The equipment lists are traceable to the national reference standards.

2. The test report can not be partially copied unless prior written approval is issued from our lab.

3. The test report is invalid without the "special seal for inspection and testing".

4. The test report is invalid without the signature of the approver.

5. The test process and test result is only related to the Unit Under Test.

6. Sample information is provided by the client and the laboratory is not responsible for its authenticity.

7. The test report without CMA mark is only used for scientific research, teaching, enterprise product development and internal quality control purposes.

8. The quality system of our laboratory is in accordance with ISO/IEC17025.

9. If there is any objection to this test report, the client should inform issuing laboratory within 15 days from the date of receiving test report.

Address:
1-2/F., Building B, Pengzhou Industrial Park, No.158, Fuyuan 1st Road, Zhancheng, Fuhai Subdistrict, Bao'an District, Shenzhen, Guangdong, China

TEL：400-788-9558

P.C.: 518103

FAX：0755-33229357

Website：http://www.chnbctc.com

E-Mail：bctc@bctc-lab.com.cn

※※※※※ **END** ※※※※※