S T S L A B

SAR
Dipole Performance Measurement Report

EUT Type:	SAR Validation Dipole and Waveguide
Model Name:	DIP0G750, DIP0G835, DIP0G900, DIP1G800, DIP1G900, DIP2G000, DIP2G450, DIP2G600, WGA32
Brand Name:	SATIMO
Test Conclusion:	Pass
Test Date:	11 Dec. 2024&03 Jul. 2025
Date of Issue:	03 Jul. 2025

Testing Engineer : Xin Liu

(Xin.Liu)

Technical Manager : Shi fan. long

(Shifan. Long)

Authorized Signatory : Bovey Yang

(Bovey Yang)

SHENZHEN STS TEST SERVICES CO.,LTD. TESTING APPROVAL

Any reproduction of this document must be done in full. No single part of this document may be reproduced without permission from STS, All Test Data Presented in this report is only applicable to presented Test sample.

ShenZhen STS Test Services Co.,Ltd.
A 1/F, Building B, Zhuoke Science Park, No.190 Chongqing Road, HepingShequ, Fuyong Sub-District, Bao'an District, Shenzhen, Guang Dong, China
TEL: +86-755 3688 6288 FAX: +86-755 3688 6277 E-mail:sts@stsapp.com

Kind of Equipment	Manufacturer	Type No.	Serial No.	Last Calibration	Calibrated Until
PC	Acer	N/A	N/A	N/A	N/A
E-Field Probe	MVG	SSE2	SN 08/21 EPGO352	2024.09.18	2025.09.17
Dielectric Probe Kit	MVG	SCLMP	SN 32/14 OCPG67	2024.09.18	2025.09.17
Phantom1	MVG	SAM	SN 32/14 SAM115	N/A	N/A
Phantom2	MVG	SAM	SN 32/14 SAM116	N/A	N/A
Attenuator	Agilent	99899	DC-18GHz	N/A	N/A
Directional coupler	Narda	4226-20	3305	N/A	N/A
Network Analyzer	Agilent	E5071C	MY46520378	2024-09-25	2025-09-26
Multi Meter	Keithley	Multi Meter 2000	4050073	2024-09-25	2025-09-26
Signal Generator	Agilent	N5182A	MY50140530	2024-09-25	2025-09-26
Power Amplifier	DESAY	ZHL-42W	9638	2024-09-25	2025-09-26
Power Meter	R&S	NRP	100510	2024-09-25	2025-09-26
Power Sensor	R&S	NRP-Z11	101919	2024-09-25	2025-09-26
Power Sensor	Keysight	U2021XA	MY56280002	2024-09-25	2025-09-26
Temperature hygrometer	SuWei	SW-108	N/A	2024.10.15	2025.10.14
Thermograph	Elitech	RC-4	S/N EF7176501537	2024.10.15	2025.10.14

2. <Justification of the extended calibration>

Referring to KDB 865664 D01, if dipoles are verified in return loss<-20dB, (within 20% of prior calibration), and in impedance (within 5 ohm of prior calibration), the annual calibration is not necessary and the calibration interval can be extended.

Head 750 MHz				
Date of Measurement	Return Loss (dB)	Delta (%)	Impedance	Delta(ohm)
2023.07.04	-25.47	-	55.2	-
2024.07.01	-25.98	2.00	54.86	-0.62
2025.07.03	-25.99	2.02	53.45	-3.16

The return loss is <-20dB, within 20% of prior calibration; the impedance is within 5 ohm of prior calibration. Therefore the verification result should support extended calibration.

<Dipole Verification Data>

Head 750 MHz

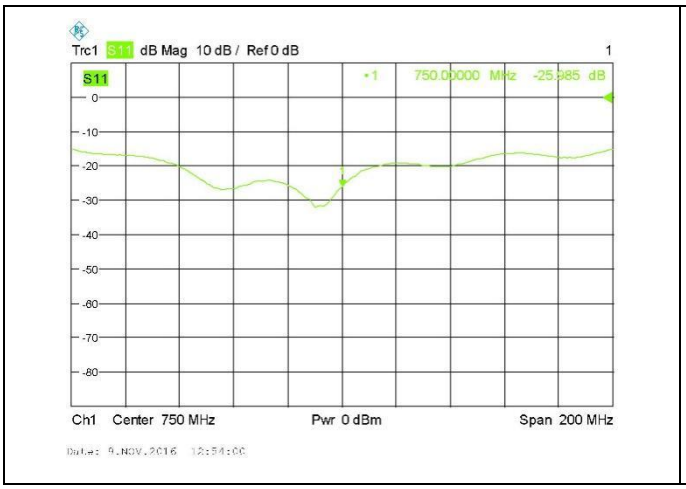

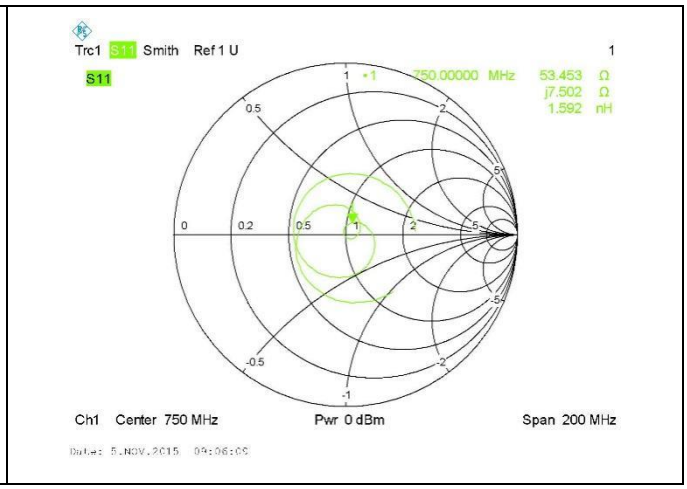

Head 835 MHz				
Date of Measurement	Return Loss (dB)	Delta (%)	Impedance	Delta(ohm)
2023.07.04	-28.13	-	51.4	-
2024.07.01	-28.43	1.07	52.62	2.37
2025.07.03	-28.83	2.47	52.51	2.16

The return loss is <-20dB, within 20% of prior calibration; the impedance is within 5 ohm of prior calibration. Therefore the verification result should support extended calibration.

<Dipole Verification Data>

Head 835MHz

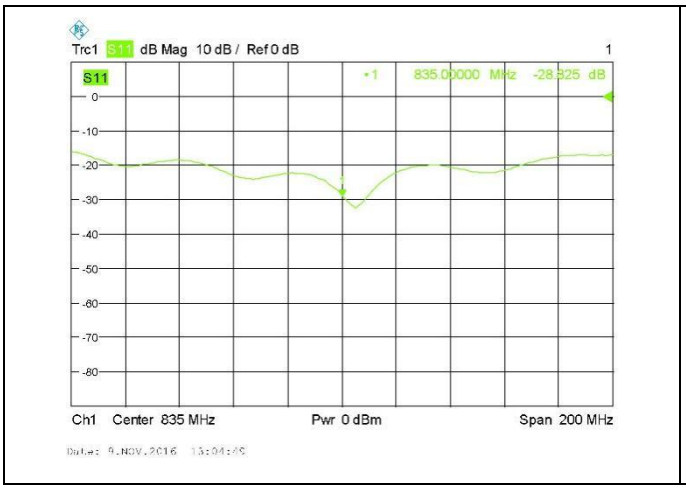

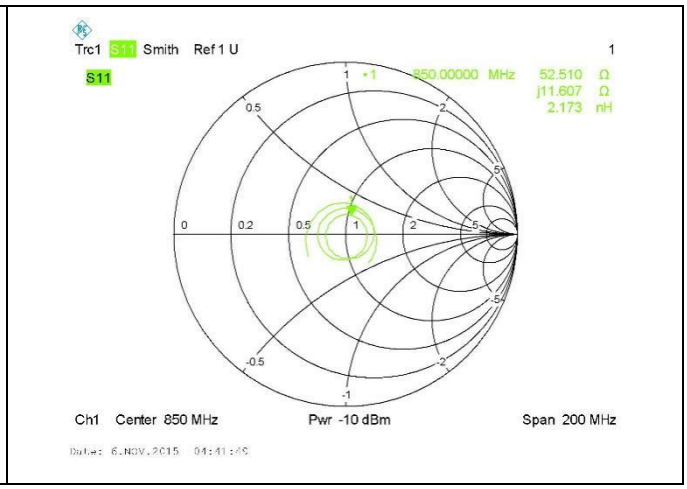

Head 900 MHz				
Date of Measurement	Return Loss (dB)	Delta (%)	Impedance	Delta(ohm)
2023.12.20	-27.67	-	50.1	/
2024.12.11	-27.75	0.29	51.09	1.98

The return loss is <-20dB, within 20% of prior calibration; the impedance is within 5 ohm of prior calibration. Therefore the verification result should support extended calibration.

<Dipole Verification Data>

Head 900MHz

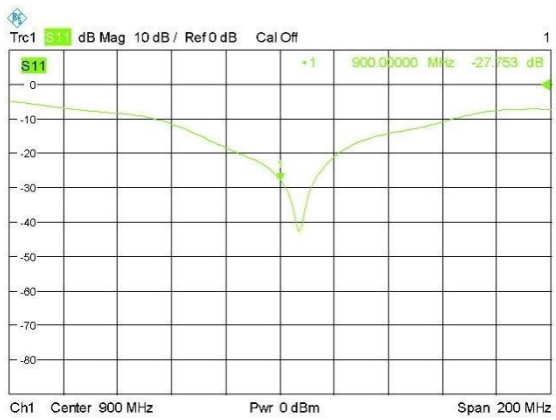

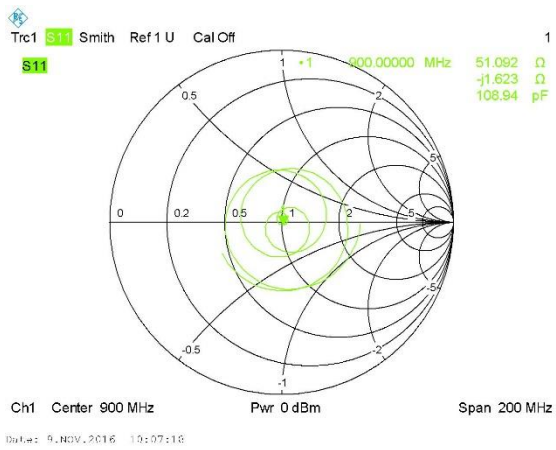

Head 1800 MHz				
Date of Measurement	Return Loss (dB)	Delta (%)	Impedance	Delta(ohm)
2023.12.20	-27.38	/	50.2	/
2024.12.11	-27.04	-1.23	48.48	-3.43

The return loss is <-20dB, within 20% of prior calibration; the impedance is within 5 ohm of prior calibration. Therefore the verification result should support extended calibration.

<Dipole Verification Data>

Head 1800 MHz

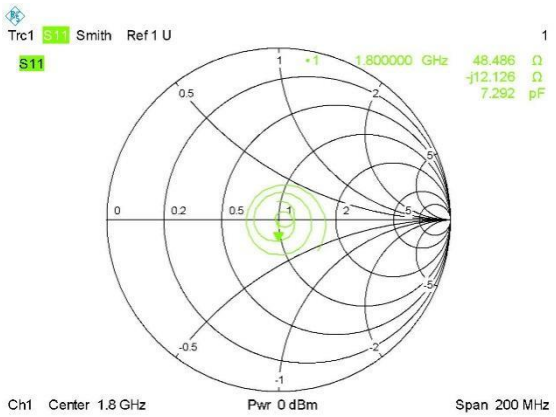

Head 1900 MHz				
Date of Measurement	Return Loss (dB)	Delta (%)	Impedance	Delta(ohm)
2023.09-14	-23.66	-	51.4	-
2024.07.01	-23.62	-0.17	50.73	-1.30
2025.07.03	-23.89	0.96	50.62	-1.52

The return loss is <-20dB, within 20% of prior calibration; the impedance is within 5 ohm of prior calibration. Therefore the verification result should support extended calibration.

<Dipole Verification Data>

Head 1900 MHz

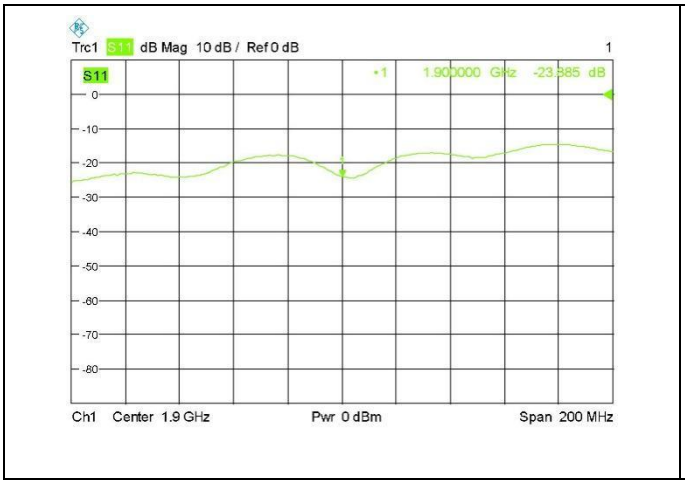

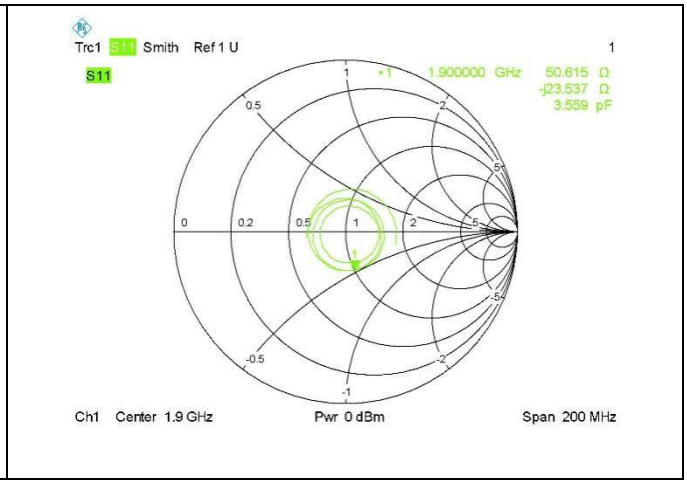

Head 2000 MHz				
Date of Measurement	Return Loss (dB)	Delta (%)	Impedance	Delta(ohm)
2023.07.04	-34.30	-	50.2	-
2024.07.01	-34.89	1.72	51.86	3.31
2025.07.03	-34.87	1.66	51.84	3.26

The return loss is <-20dB, within 20% of prior calibration; the impedance is within 5 ohm of prior calibration. Therefore the verification result should support extended calibration.

<Dipole Verification Data>

Head 2000 MHz

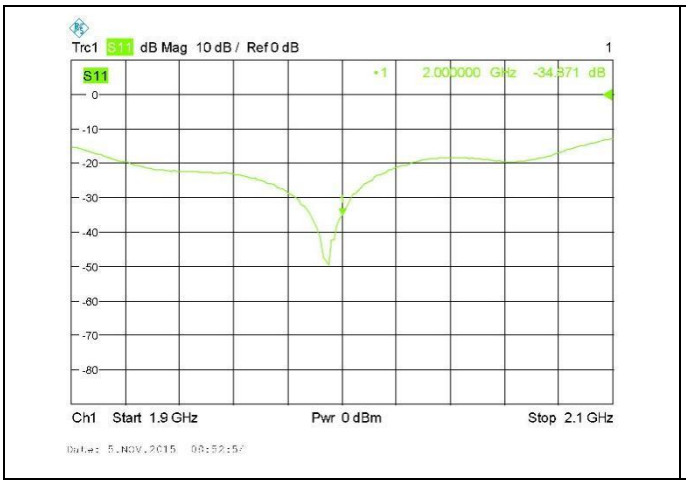

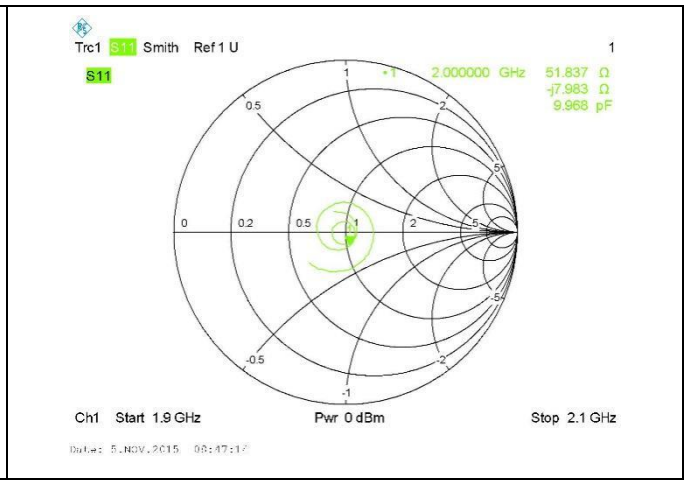

Head 2450 MHz				
Date of Measurement	Return Loss (dB)	Delta (%)	Impedance	Delta(ohm)
2023.07.04	-26.03	-	46.3	-
2024.07.01	-26.42	1.50	47.25	2.05
2025.07.03	-26.91	3.38	47.4	2.37

The return loss is <-20dB, within 20% of prior calibration; the impedance is within 5 ohm of prior calibration. Therefore the verification result should support extended calibration.

<Dipole Verification Data>

Head 2450 MHz

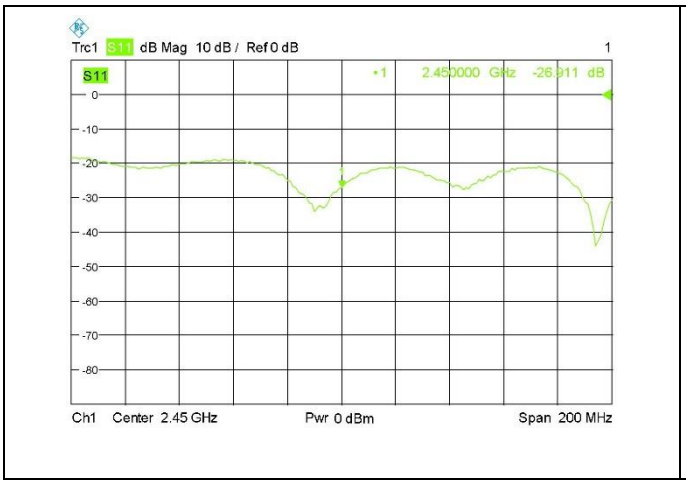

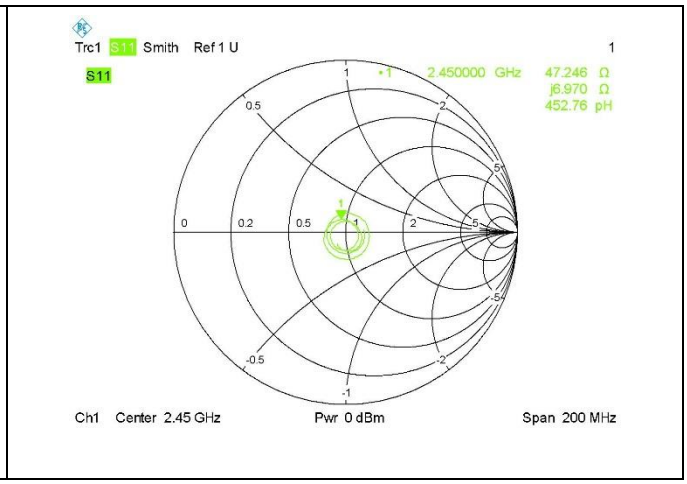

Head 2600 MHz				
Date of Measurement	Return Loss (dB)	Delta (%)	Impedance	Delta(ohm)
2023.07.04	-34.32	-	50.3	-
2024.07.01	-33.58	-2.16	49.61	-1.37
2025.07.03	-34.78	1.34	48.94	-2.71

The return loss is <-20dB, within 20% of prior calibration; the impedance is within 5 ohm of prior calibration. Therefore the verification result should support extended calibration.

<Dipole Verification Data>

Head 2600 MHz

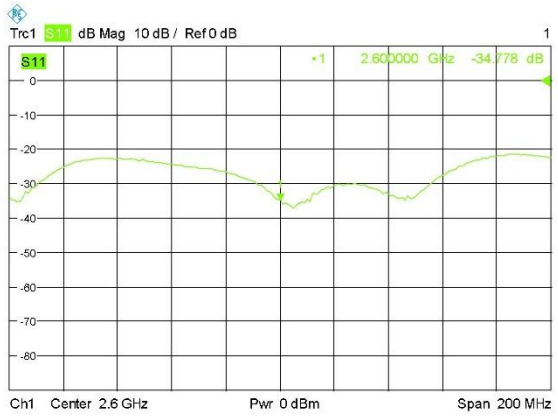

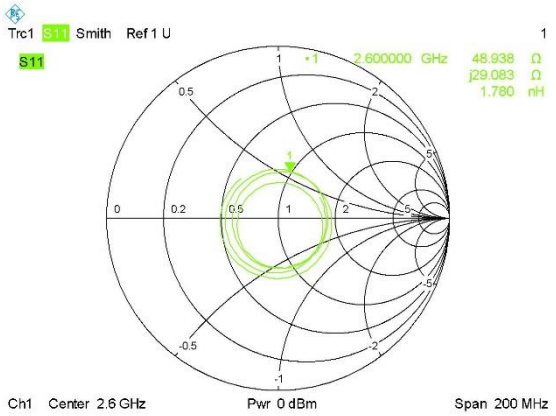

Head 5000 MHz				
Date of Measurement	Return Loss (dB)	Delta (%)	Impedance	Delta(ohm)
2023.07.04	< -8.23	-	-	-
2024.07.01	-9.10	10.57	-	-
2025.07.03	-9.70	17.86-	-	-

The return loss is <-8dB, within 20% of prior calibration; Therefore the verification result should support extended calibration.

<Dipole Verification Data>
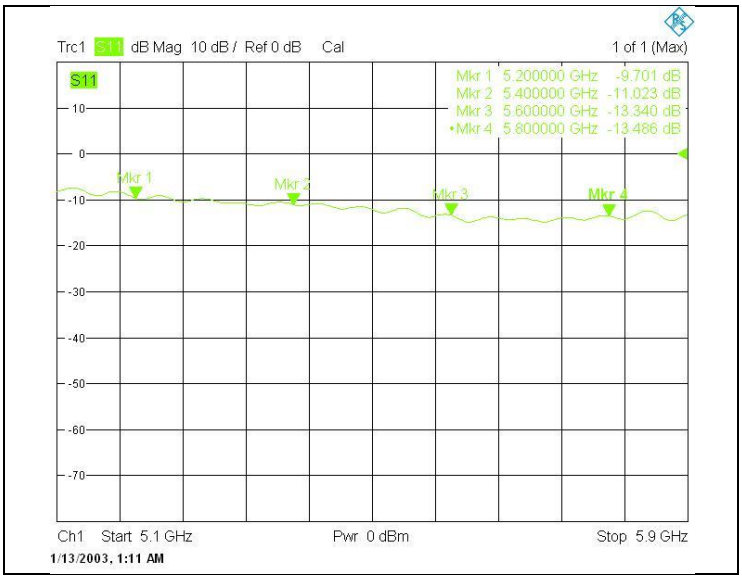
Head 5000MHz