FCC RADIO TEST REPORT
FCC ID: 2ANMU-WP60

Product: Smart Phone

Trade Mark: OUKITEL

Model No.: WP60

Family Model: WP60 S, WP60 Pro, WP60 Plus, WP60 Ultra, WP60 TITAN, WP60 GT, WP60 TI

Report No.: N25080200429E

Issue Date: Oct. 21, 2025

Prepared for

SHENZHEN YUNJI INTELLIGENT TECHNOLOGY CO.,LTD

A2 2F BUILDING ENET NEW INDUSTRIAL PARK, DAFU INDUSTRIAL ZONE, GUANLAN,LONGHUA SHENZHEN, 518XXX China

Prepared by

Shenzhen NTEK Testing Technology Co., Ltd.

No. 24 Xinfa East Road, Xiangshan Community, Xinqiao Street, Baoan District, Shenzhen, Guangdong, People's Republic of China

Tel. 0755-23200050 Website:http://www.ntek.org.cn

TABLE OF CONTENTS

1 TEST RESULT CERTIFICATION 3

2 SUMMARY OF TEST RESULTS 4

3 FACILITIES AND ACCREDITATIONS 5

3.1 FACILITIES 5
3.2 LABORATORY ACCREDITATIONS AND LISTINGS 5
3.3 MEASUREMENT UNCERTAINTY 5

4 GENERAL DESCRIPTION OF EUT 6

5 DESCRIPTION OF TEST MODES 8

6 SETUP OF EQUIPMENT UNDER TEST 9

6.1 BLOCK DIAGRAM CONFIGURATION OF TEST SYSTEM 9
6.2 SUPPORT EQUIPMENT 10
6.3 EQUIPMENTS LIST FOR ALL TEST ITEMS 11

7 TEST REQUIREMENTS 13

7.1 FIELD STRENGTH OF SPURIOUS RADIATION 13
7.2 EFFECTIVE RADIATED POWER AND EFFECTIVE ISOTROPIC RADIATED POWER 24
7.3 CONDUCTED OUTPUT POWER 29
7.4 FREQUENCY STABILITY 31
7.5 PEAK-TO-AVERAGE RATIO 38
7.6 26DB BANDWIDTH AND 99% OCCUPIED BANDWIDTH 40
7.7 CONDUCTED BAND EDGE 42
7.8 CONDUCTED SPURIOUS EMISSION AT ANTENNA TERMINAL 43

1 TEST RESULT CERTIFICATION

Applicant's name .....:	SHENZHEN YUNJI INTELLIGENT TECHNOLOGY CO.,LTD
Address .....:	A2 2F BUILDING ENET NEW INDUSTRIAL PARK, DAFU INDUSTRIAL ZONE, GUANLAN,LONGHUA SHENZHEN, 518XXX China
Manufacturer's Name .....:	SHENZHEN YUNJI INTELLIGENT TECHNOLOGY CO.,LTD
Address .....:	A2 2F BUILDING ENET NEW INDUSTRIAL PARK, DAFU INDUSTRIAL ZONE, GUANLAN,LONGHUA SHENZHEN, 518XXX China
Product description	
Product name .....:	Smart Phone
Trade Mark .....:	OUKITEL
Model and/or type reference .....:	WP60
Family Model .....:	WP60 S, WP60 Pro, WP60 Plus, WP60 Ultra, WP60 TITAN, WP60 GT, WP60 TI
Test Sample number .....:	S2508110183-1#
Date of Test .....:	Aug. 11, 2025 ~ Oct. 21, 2025

Measurement Procedure Used:

APPLICABLE STANDARDS	
APPLICABLE STANDARD/ TEST PROCEDURE	TEST RESULT
47 CFR Part 2, Part 22H, Part 24E, Part 27 ANSI/TIA-603-E-2016 FCC KDB 971168 D01 Power Meas License Digital Systems v03 ANSI C63.26:2015	Complied

This device described above has been tested by Shenzhen NTEK Testing Technology Co., Ltd., and the test results show that the equipment under test (EUT) is in compliance with the FCC requirements. And it is applicable only to the tested sample identified in the report.
This report shall not be reproduced except in full, without the written approval of Shenzhen NTEK Testing Technology Co., Ltd., this document may be altered or revised by Shenzhen NTEK Testing Technology Co., Ltd., personnel only, and shall be noted in the revision of the document.
The test results of this report relate only to the tested sample identified in this report.

Prepared By:	Reviewed By:	Approved By:
Allen Liu	Aaron Cheng	Alex Li
(Project Engineer)	(Supervisor)	(Manager)

2 SUMMARY OF TEST RESULTS

FCC Part22H / FCC Part24E / FCC Part 27 & ANSI C63.26-2015			
FCC Rule	**Test Item**	**Verdict**	**Remark**
2.1046	Conducted Output Power	PASS	
Sub clause 5.2.3.4 of ANSI C63.26-2015	Peak-to-Average Ratio	PASS	
2.1049 22.917	Occupied Bandwidth	PASS	
2.1051 22.917 24.238 27.53	Band Edge	PASS	
22.913	Effective Radiated Power	PASS	
2.1053 22.917 24.238 27.53	Field Strength of Spurious Radiation	PASS	
2.1055 22.355 24.235 27.54	Frequency Stability for Temperature & Voltage	PASS	
2.1051 22.917 24.238 27.53	Conducted Emission	PASS	

Remark:
1. “N/A” denotes test is not applicable in this Test Report.
2. All test items were verified and recorded according to the standards and without any deviation during the test.
3. No modifications are made to the EUT during all test items.

3 FACILITIES AND ACCREDITATIONS

3.1 FACILITIES

All measurement facilities used to collect the measurement data are located at
No. 24 Xinfa East Road, Xiangshan Community, Xinqiao Street, Baoan District, Shenzhen, Guangdong, People's Republic of China.
The sites are constructed in conformance with the requirements of ANSI C63.7, ANSI C63.10 and CISPR Publication 22.

3.2 LABORATORY ACCREDITATIONS AND LISTINGS

Site Description

CNAS-Lab.	:	The Certificate Registration Number is L5516.
IC-Registration		The Certificate Registration Number is 9270A.
FCC- Accredited		Test Firm Registration Number: 463705. Designation Number: CN1184
A2LA-Lab.		The Certificate Registration Number is 4298.01 This laboratory is accredited in accordance with the recognized International Standard ISO/IEC 17025:2005 General requirements for the competence of testing and calibration laboratories. This accreditation demonstrates technical competence for a defined scope and the operation of a laboratory quality management system (refer to joint ISO-ILAC-IAF Communiqué dated 8 January 2009).
Name of Firm	:	Shenzhen NTEK Testing Technology Co., Ltd.
Site Location	:	No. 24 Xinfa East Road, Xiangshan Community, Xinqiao Street, Baoan District, Shenzhen, Guangdong, People's Republic of China.

3.3 MEASUREMENT UNCERTAINTY

The reported uncertainty of measurement, where expended uncertainty U is based on a standard uncertainty multiplied by a coverage factor of k=2, providing a level of confidence of approximately 95 %.

No.	Item	Uncertainty
1	Measuring Uncertainty for a Level of Confidence of 95% (U = 2Uc(y))	2.5dB

4 GENERAL DESCRIPTION OF EUT

Product Feature and Specification	
Equipment	Smart Phone
Trade Mark	OUKITEL
FCC ID	2ANMU-WP60
Model No.	WP60
Family Model	WP60 S, WP60 Pro, WP60 Plus, WP60 Ultra, WP60 TITAN, WP60 GT, WP60 TI
Model Difference	All models are the same circuit and RF module, except for model names.
Operating Frequency	☒GSM850: TX824.2MHz~848.8MHz /RX869.2MHz~893.8MHz; ☒UMTS FDD Band V: TX826.4MHz~846.6MHz /RX871.4MHz~891.6MHz; ☒PCS1900: TX1850.2MHz~1909.8MHz /RX1930.2MHz~1989.8MHz; ☒UMTS FDD Band II: TX1852.4MHz~1907.6MHz /RX1932.4MHz~1987.6MHz; ☒UMTS-FDD Band Ⅳ:TX1710MHz~1755MHz /RX2110MHz~2155MHz
Modulation	☒GMSK for GSM/GPRS; ☒8PSK for EGPRS; ☒QPSK for UMTS bands;
Power Class	4, tested with power level 5(GSM 850) 1, tested with power level 0(GSM 1900) 3, tested with power control “all 1”(WCDMA Band II/IV/V)
GPRS Class	☒Multi-Class12 ☒Only 4 timeslots are used for GPRS
Antenna Type	PIFA Antenna
Antenna Gain	GSM 850: -2.3dBi; PCS 1900: 0.16dBi; Band II: 0.16dBi; Band Ⅳ: 0.21dBi ; Band V: -2.3dBi
Adapter	Model: HJ-PD33W-US Input: 100-240V~50/60Hz 0.8A Output: DC 5.0V⎓3.0A or DC 9.0V⎓3.0A or DC 12.0V⎓2.75A 33.0W Max.
Battery	DC 3.87V, 10000mAh, 38.7Wh
Power supply	DC 3.87V from battery or DC 5V/9V/12V/15V/20V from adapter
HW Version	G2320G-UF-V1.2
SW Version	V04

Note: Based on the application, features, or specification exhibited in User's Manual, the EUT is considered as an ITE/Computing Device. More details of EUT technical specification, please refer to the User's Manual. The High Voltage 4.45V and Low Voltage 3.29V was declared by manufacturer, The EUT couldn’t be operate normally with higher or lower voltage.

Revision History

Report No.	Version	Description	Issued Date
N25080200429E	Rev.01	Initial issue of report	Oct. 21, 2025

5 DESCRIPTION OF TEST MODES

During the testing, the EUT was controlled via Rhode & Schwarz Digital Radio Communication Tester(CMU 200) to ensure max power transmission and proper modulation. Three channels (The low channel, the middle channel and the high channel) were chosen for testing on, GSM/GPRS/EGPRS 850, GSM/GPRS/EGPRS 1900, HSDPA band II, HSUPA band II, HSDPA band V, HSUPA band V, HSDPA band Ⅳ, HSUPA band Ⅳ frequency band.
Note: GSM/GPRS/EGPRS 850, GSM/GPRS/EGPRS 1900, HSDPA band II, HSUPA band II, HSDPA band V, HSUPA band V, HSDPA band Ⅳ, HSUPA band Ⅳ modes have been tested during the test. the worst condition (GSM850, RMC 12.2k,) be recorded in the test report if no other modes test data.

Antenna port conducted and radiated test items were performed according to KDB 971168 D01 Power Meas. License Digital Systems v03 with maximum output power.
Radiated measurements were performed with rotating EUT in different three orthogonal test planes to find the maximum emission.
Radiated emissions were investigated as following frequency range:
1. 30 MHz to 10th harmonic for GSM850/UMTS FDD Band V/ UMTS FDD Band Ⅳ
2. 30 MHz to 10th harmonic for GSM1900/UMTS FDD Band II
All modes and data rates and positions were investigated.

Test modes are chosen to be reported as the worst case configuration below:

Test Modes		
Band	For Conducted Test Cases	For Radiated Test Cases
GSM 850/1900	GSM Link	GSM Link
UMTS Band II	RMC 12.2Kbps Link	RMC 12.2Kbps Link
UMTS Band V	RMC 12.2Kbps Link	RMC 12.2Kbps Link
UMTS Band Ⅳ	RMC 12.2Kbps Link	RMC 12.2Kbps Link

Test Frequency and Channels:

Frequency Band	☒ GSM 850		☒GSM 1900		☒ UMTS Band II		☒UMTS Band V	
	Channel	Frequency (MHz)	Channel	Frequency (MHz)	Channel	Frequency (MHz)	Channel	Frequency (MHz)
CH_H	251	848.8	810	1909.8	9538	1907.6	4233	846.6
CH_M	189	836.4	661	1880.0	9400	1880.0	4182	836.4
CH_L	128	824.2	512	1850.2	9262	1852.4	4132	826.4

Frequency Band	☒ UMTS Band Ⅳ	
	Channel	Frequency (MHz)
CH_H	1513	1752.6
CH_M	1413	1732.6
CH_L	1312	1712.4

6 SETUP OF EQUIPMENT UNDER TEST

6.1 BLOCK DIAGRAM CONFIGURATION OF TEST SYSTEM

For Radiated Test Cases

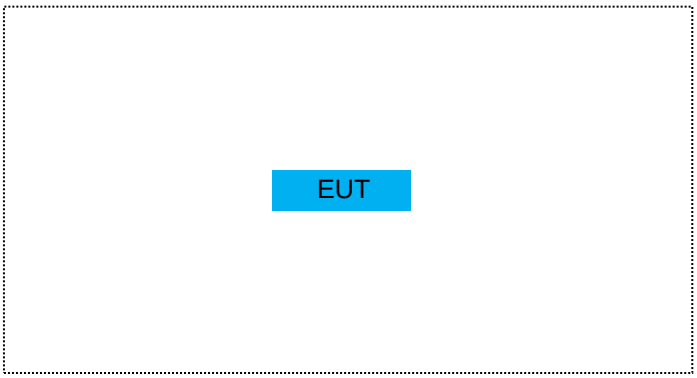

For Conducted Output Power

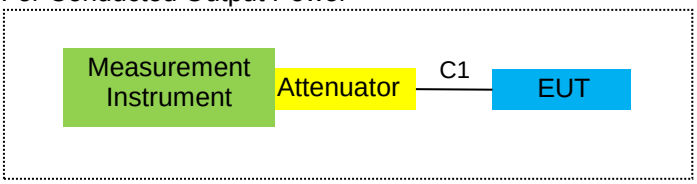

For Peak-to Average Ratio, Occupied Bandwidth, Conducted Band edge and Conducted Spurious Emission

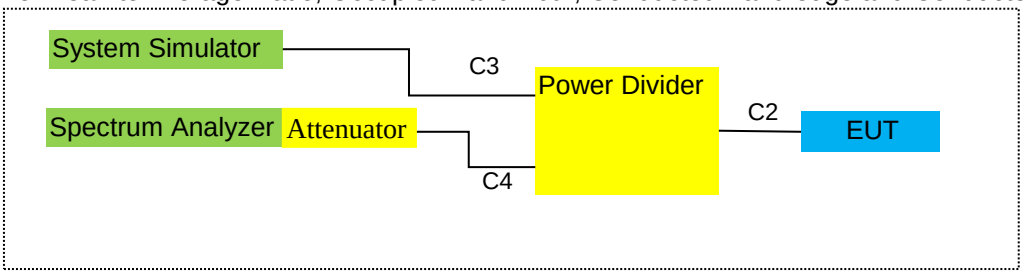

For Frequency Stability

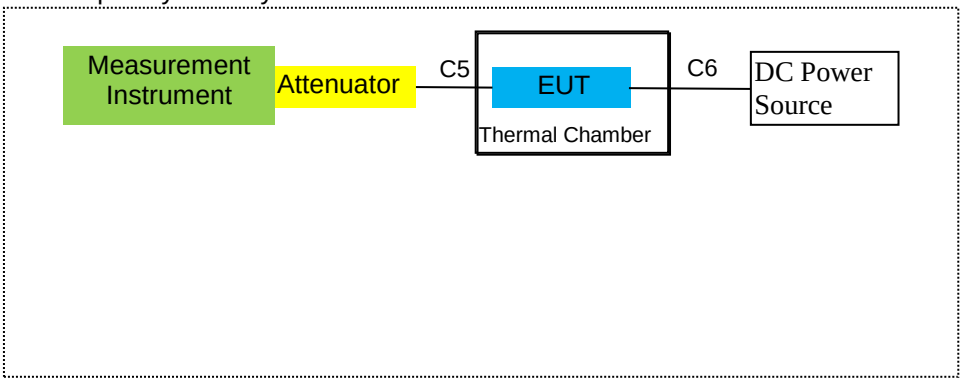

6.2 SUPPORT EQUIPMENT

The EUT has been tested as an independent unit together with other necessary accessories or support units. The following support units or accessories were used to form a representative test configuration during the tests.

Item	Equipment	Model/Type No.	Series No.	Note
EUT	Smart Phone	WP60	N/A	N/A

Item	Cable Type	Shielded Type	Ferrite Core	Length
C-1	RF Cable	YES	NO	0.1m
C-2	RF Cable	YES	NO	0.1m
C-3	RF Cable	YES	NO	0.1m
C-4	RF Cable	YES	NO	0.2m
C-5	RF Cable	YES	NO	0.2m
C-6	DC Cable	NO	NO	1.0m

Notes:

(1) The support equipment was authorized by Declaration of Confirmation.
(2) For detachable type I/O cable should be specified the length in cm in『Length』column.
(3) “YES” is means “shielded” “with core”; “NO” is means “unshielded” “without core”.

6.3 EQUIPMENTS LIST FOR ALL TEST ITEMS

Item	Kind of Equipment	Manufacturer	Type No.	Serial No.	Last calibration	Calibrated until	Calibration period
1	MXA Signal Analyzer	Agilent	N9020A	MY49100060	2025.04.17	2026.04.16	1 year
2	Test Receiver	R&S	ESPI7	101318	2025.04.17	2026.04.16	1 year
3	Bilog Antenna	TESEQ	CBL6111D	31216	2025.04.17	2026.04.16	1 year
4	50Ω Coaxial Switch	Anritsu	MP59B	6200983705	2024.04.26	2027.04.25	3 year
5	Horn Antenna	EM	EM-AH-10180	2011071402	2024.05.12	2027.05.11	3 year
6	Horn Ant	Schwarzbeck	BBHA 9170	9170-181	2024.05.12	2027.05.11	3 year
7	Amplifier	EM	EM-30180	060538	2025.04.17	2026.04.16	1 year
8	Loop Antenna	ARA	PLA-1030/B	1029	2025.04.17	2026.04.16	1 year
9	Power Meter	R&S	NRVS	100696	2025.04.17	2026.04.16	1 year
10	Power Sensor	R&S	URV5-Z4	0395.1619.05	2025.04.17	2026.04.16	1 year
11	Test Cable	N/A	R-01	N/A	2023.06.16	2026.06.15	3 year
12	Test Cable	N/A	R-02	N/A	2023.06.16	2026.06.15	3 year
13	Test Cable	N/A	R-03	N/A	2023.06.16	2026.06.15	3 year
14	Test Receiver	R&S	ESCI	101160	2025.04.17	2026.04.16	1 year
15	LISN	R&S	ENV216	101313	2025.04.17	2026.04.16	1 year
16	LISN	EMCO	3816/2	00042990	2025.04.17	2026.04.16	1 year
17	50Ω Coaxial Switch	Anritsu	MP59B	6200264417	2025.04.17	2026.04.16	1 year
18	Passive Voltage Probe	R&S	ESH2-Z3	100196	2025.04.17	2026.04.16	1 year
19	Test Cable	N/A	C01	N/A	2023.05.06	2026.05.05	3 year
20	Test Cable	N/A	C02	N/A	2023.05.06	2026.05.05	3 year
21	Test Cable	N/A	C03	N/A	2023.05.06	2026.05.05	3 year
22	Attenuator	MCE	24-10-34	BN9258	2025.04.17	2026.04.16	1 year
23	Spectrum Analyzer	agilent	e4440a	us44300399	2025.04.17	2026.04.16	1 year
24	test receiver	R&S	ESCI	a0304218	2025.04.17	2026.04.16	1 year
25	Communication Tester	R&S	CMU200	A0304247	2025.04.17	2026.04.16	1 year
26	Thermal Chamber	Ten Billion	TTC-B3C	TBN-960502	2025.04.17	2026.04.16	1 year

27	DC Power Source	N/A	PS-6005D	20170402923	2023.05.06	2026.05.05	3 year
28	MXG Vector Signal Generator	Agilent	N5182A	MY47070317	2025.04.17	2026.04.16	1 year
29	Communication Tester	R&S	CMW500	148500	2025.05.06	2026.05.05	1 year

Note: Each piece of equipment is scheduled for calibration once a year except the Test Cable& DC Power Source which is scheduled for calibration every 3 years

Measurement Software

Item	Manufacturer	Software Name	Software Version	Description
1	MWRFtest	MTS 8200	2.0	RF Conducted Test
2	Farad	EZ-EMC_RE	AIT-03A	RadiatedTest
3	Farad	EZ-EMC_CE	AIT-03A	AC Conducted Test

7 TEST REQUIREMENTS

7.1 FIELD STRENGTH OF SPURIOUS RADIATION

7.1.1 Applicable Standard

According to FCC KDB 971168 D01 v03 Section 5.8 and ANSI/TIA-603-E-2016 Section 2.2.12

7.1.2 Conformance Limit

The power of any emission outside of the authorized operating frequency ranges must be attenuated below the transmitter power (P) by a factor of at least 43 + 10 log (P) dB. The spectrum is scanned from 30 MHz up to a frequency including its 10th harmonic.

7.1.3 Measuring Instruments

The Measuring equipment is listed in the section 6.3 of this test report.

7.1.4 Test Configuration

According to the ANSI/TIA-603-E-2016 test method, The Receiver or Spectrum was scanned from 9 KHz to the 10th harmonic of the highest frequency generated within the equipment, which is the transmitted carrier that can be as high as 1910 MHz The resolution bandwidth is set as outlined in Part 24.238, Part 22.917. The spectrum is scanned with the mobile station transmitting at carrier frequencies that pertain to low, mid and high channels of WCDMA Band II/IV/V, GSM 850/1900, CDMA BC0/1.

TEST CONFIGURATION

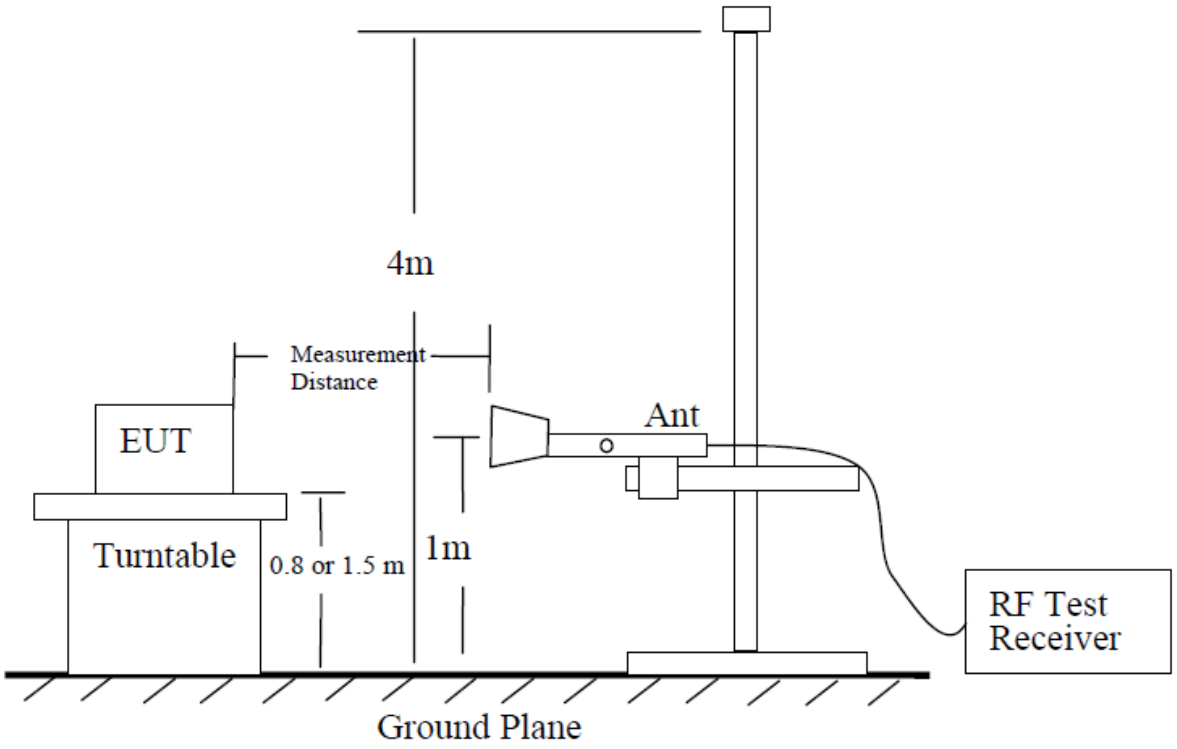

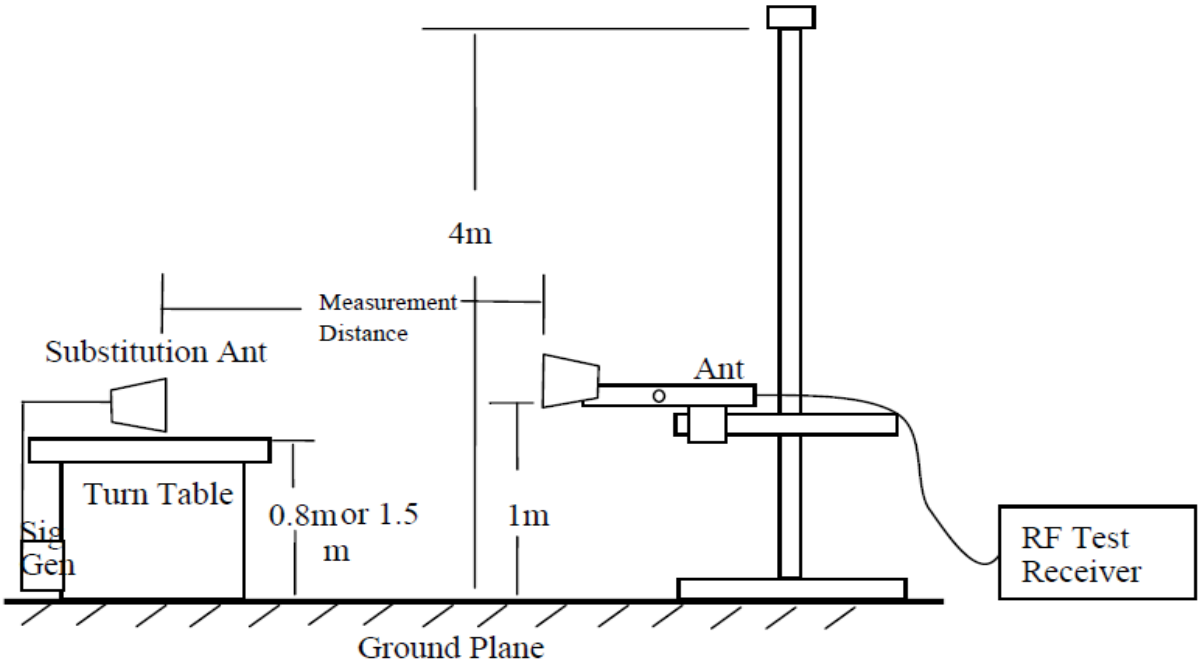

7.1.5 Test Procedure

1. EUT was placed on a 0.8 meter(For frequency above 1G, EUT should be placed on 1.5m) high non-conductive stand at a 3 meter test distance from the receive antenna. A receiving antenna was placed on the antenna mast 3 meters from the EUT for emission measurements. The height of receiving antenna is 1.50 meter. Detected emissions were maximized at each frequency by rotating the EUT through 360° and adjusting the receiving antenna polarization. The radiated emission measurements of all transmit frequencies in three channels (High, Middle, Low) were measured with peak detector.
2. A log-periodic antenna or double-ridged waveguide horn antenna shall be substituted in place of the EUT. The log-periodic antenna will be driven by a signal generator and the level will be adjusted till the same power value on the spectrum analyzer or receiver. The level of the spurious emissions can be calculated through the level of the signal generator, cable loss, the gain of the substitution antenna and the reading of the spectrum analyzer or receiver.
3. The EUT is then put into continuously transmitting mode at its maximum power level during the test.Set Test Receiver or Spectrum RBW=1MHz,VBW=3MHz, And the maximum value of the receiver should be recorded as (P_r).
4. The EUT shall be replaced by a substitution antenna. In the chamber, an substitution antenna for the frequency band of interest is placed at the reference point of the chamber. An RF Signal source for the frequency band of interest is connected to the substitution antenna with a cable that has been constructed to not interfere with the radiation pattern of the antenna. A power (SG Level) is applied to the input of the substitution antenna, and adjust the level of the signal generator output until the value of the receiver reach the previously recorded (P_r). The power of signal source (SG Level) is recorded. The test should be performed by rotating the test item and adjusting the receiving antenna polarization.
5. A amplifier should be connected to the Signal Source output port. And the cable should be connect between the Amplifier and the Substitution Antenna. The cable loss (Cable Loss) ,the Substitution Antenna Gain should be recorded after test.
   The measurement results are obtained as described below:
   Power(EIRP)= SG Level- Cable Loss+ Antenna Gain
6. This value is EIRP since the measurement is calibrated using an antenna of known gain (2.15 dBi) and known input power.
7. ERP can be calculated from EIRP by subtracting the gain of the dipole, ERP = EIRP -2.15dBi.

7.1.6 Test Results

EUT:	Smart Phone	Model No.:	WP60
Temperature:	20 ℃	Relative Humidity:	48%
Test Mode:	GSM/GPRS/EGPRS 850, GSM/GPRS/EGPRS 1900, UMTS band II/ UMTS band V/ UMTS band Ⅳ	Test By:	Allen Liu

■ Radiated Spurious Emission

***GSM* 850**							
Frequency	SG Level	Cable Loss	Antenna Factor	Absolute Level	Limit	Over Limit	Polarity
(MHz)	(dBm)	(dB)	(dB)	(dBm)	(dBm)	(dBm)	
Test Results for Channel 128/824.2 MHz							
1648.4	-44.03	2.80	27.50	-19.33	-13	-6.33	Vertical
1648.4	-47.15	2.80	27.50	-22.45	-13	-9.45	Horizontal
2472.6	-50.99	2.91	27.80	-26.10	-13	-13.10	Vertical
2472.6	-53.69	2.91	27.80	-28.80	-13	-15.80	Horizontal
3296.8	-53.64	4.02	29.87	-27.79	-13	-14.79	Vertical
3296.8	-47.06	4.02	29.87	-21.21	-13	-8.21	Horizontal
131.2	-51.34	1.35	17.77	-34.92	-13	-21.92	Vertical
116.8	-50.35	1.77	17.83	-34.29	-13	-21.29	Horizontal
Test Results for Channel 190/836.6 MHz							
1673.2	-52.27	2.80	27.48	-27.59	-13	-14.59	Vertical
1673.2	-48.76	2.80	27.48	-24.08	-13	-11.08	Horizontal
2509.8	-45.44	2.91	27.70	-20.65	-13	-7.65	Vertical
2509.8	-49.67	2.91	27.70	-24.88	-13	-11.88	Horizontal
3346.4	-53.28	4.02	29.82	-27.48	-13	-14.48	Vertical
3346.4	-52.41	4.02	29.82	-26.61	-13	-13.61	Horizontal
208.8	-47.44	1.44	15.26	-33.63	-13	-20.63	Vertical
131.6	-45.5	1.51	17.23	-29.78	-13	-16.78	Horizontal
Test Results for Channel 251/848.8 MHz							
1697.6	-49.09	2.80	27.42	-24.47	-13	-11.47	Vertical
1697.6	-48.81	2.80	27.42	-24.19	-13	-11.19	Horizontal
2546.4	-50.54	2.91	27.68	-25.77	-13	-12.77	Vertical
2546.4	-51.94	2.91	27.68	-27.17	-13	-14.17	Horizontal
3395.2	-53.8	4.02	29.80	-28.02	-13	-15.02	Vertical
3395.2	-53.56	4.02	29.80	-27.78	-13	-14.78	Horizontal
95.0	-45.58	1.74	16.46	-30.86	-13	-17.86	Vertical
208.3	-46.22	1.68	16.21	-31.69	-13	-18.69	Horizontal

Remark:
1. We were tested all Configuration refer 3GPP TS134 121.
2. Emission Level= SG Level- Cable Loss+ Antenna Factor
3. Over Limit= Emission Level(dBm)-Limit(dBm)

***GPRS* 850**							
Frequency	SG Level	Cable Loss	Antenna Factor	Absolute Level	Limit	Over Limit	Polarity
(MHz)	(dBm)	(dB)	(dB)	(dBm)	(dBm)	(dBm)	
Test Results for Channel 128/824.2 MHz							
1648.4	-53.97	2.80	27.50	-29.27	-13	-16.27	Vertical
1648.4	-51.15	2.80	27.50	-26.45	-13	-13.45	Horizontal
2472.6	-53.25	2.91	27.80	-28.36	-13	-15.36	Vertical
2472.6	-44.42	2.91	27.80	-19.53	-13	-6.53	Horizontal
3296.8	-51.52	4.02	29.87	-25.67	-13	-12.67	Vertical
3296.8	-52.9	4.02	29.87	-27.05	-13	-14.05	Horizontal
154.8	-45.81	1.35	16.91	-30.25	-13	-17.25	Vertical
238.4	-50.57	1.59	17.39	-34.76	-13	-21.76	Horizontal
Test Results for Channel 190/836.6 MHz							
1673.2	-50.26	2.80	27.48	-25.58	-13	-12.58	Vertical
1673.2	-53.48	2.80	27.48	-28.80	-13	-15.80	Horizontal
2509.8	-53.91	2.91	27.70	-29.12	-13	-16.12	Vertical
2509.8	-50.5	2.91	27.70	-25.71	-13	-12.71	Horizontal
3346.4	-53.26	4.02	29.82	-27.46	-13	-14.46	Vertical
3346.4	-50.52	4.02	29.82	-24.72	-13	-11.72	Horizontal
110.1	-44.23	1.36	17.36	-28.23	-13	-15.23	Vertical
148.2	-48.24	1.32	15.19	-34.38	-13	-21.38	Horizontal
Test Results for Channel 251/848.8 MHz							
1697.6	-50.02	2.80	27.42	-25.40	-13	-12.40	Vertical
1697.6	-46.53	2.80	27.42	-21.91	-13	-8.91	Horizontal
2546.4	-47.36	2.91	27.68	-22.59	-13	-9.59	Vertical
2546.4	-49.43	2.91	27.68	-24.66	-13	-11.66	Horizontal
3395.2	-52.01	4.02	29.80	-26.23	-13	-13.23	Vertical
3395.2	-52.74	4.02	29.80	-26.96	-13	-13.96	Horizontal
198.1	-53.66	1.46	17.68	-37.44	-13	-24.44	Vertical
220.2	-52.78	1.31	15.79	-38.30	-13	-25.30	Horizontal

Remark:
1. We were tested all Configuration refer 3GPP TS134 121.
2. Emission Level= SG Level- Cable Loss+ Antenna Factor
3. Over Limit= Emission Level(dBm)-Limit(dBm)

***EGPRS* 850**							
Frequency	SG Level	Cable Loss	Antenna Factor	Absolute Level	Limit	Over Limit	Polarity
(MHz)	(dBm)	(dB)	(dB)	(dBm)	(dBm)	(dBm)	
Test Results for Channel 128/824.2 MHz							
1648.4	-46.3	2.80	27.50	-21.60	-13	-8.60	Vertical
1648.4	-53.9	2.80	27.50	-29.20	-13	-16.20	Horizontal
2472.6	-53.91	2.91	27.80	-29.02	-13	-16.02	Vertical
2472.6	-46.42	2.91	27.80	-21.53	-13	-8.53	Horizontal
3296.8	-47.35	4.02	29.87	-21.50	-13	-8.50	Vertical
3296.8	-51.69	4.02	29.87	-25.84	-13	-12.84	Horizontal
116.4	-48.07	1.69	16.60	-33.16	-13	-20.16	Vertical
166.1	-51.14	1.44	17.78	-34.79	-13	-21.79	Horizontal
Test Results for Channel 190/836.6 MHz							
1673.2	-49.84	2.80	27.48	-25.16	-13	-12.16	Vertical
1673.2	-47.83	2.80	27.48	-23.15	-13	-10.15	Horizontal
2509.8	-53.8	2.91	27.70	-29.01	-13	-16.01	Vertical
2509.8	-51.47	2.91	27.70	-26.68	-13	-13.68	Horizontal
3346.4	-51.52	4.02	29.82	-25.72	-13	-12.72	Vertical
3346.4	-45.06	4.02	29.82	-19.26	-13	-6.26	Horizontal
160.1	-47.63	1.54	16.14	-33.04	-13	-20.04	Vertical
246.5	-46.52	1.31	17.24	-30.59	-13	-17.59	Horizontal
Test Results for Channel 251/848.8 MHz							
1697.6	-48.44	2.80	27.42	-23.82	-13	-10.82	Vertical
1697.6	-51.9	2.80	27.42	-27.28	-13	-14.28	Horizontal
2546.4	-52.48	2.91	27.68	-27.71	-13	-14.71	Vertical
2546.4	-48.73	2.91	27.68	-23.96	-13	-10.96	Horizontal
3395.2	-53.24	4.02	29.80	-27.46	-13	-14.46	Vertical
3395.2	-46.9	4.02	29.80	-21.12	-13	-8.12	Horizontal
272.1	-47.46	1.73	15.96	-33.23	-13	-20.23	Vertical
163.9	-46.15	1.35	17.53	-29.97	-13	-16.97	Horizontal

Remark:
1. We were tested all Configuration refer 3GPP TS134 121.
2. Emission Level= SG Level- Cable Loss+ Antenna Factor
3. Over Limit= Emission Level(dBm)-Limit(dBm)

***GSM* 1900**							
Frequency	SG Level	Cable Loss	Antenna Factor	Absolute Level	Limit	Over Limit	Polarity
(MHz)	(dBm)	(dB)	(dB)	(dBm)	(dBm)	(dBm)	
Test Results for Channel 512/1850.2MHz							
3700.4	-57.68	4.04	33.51	-28.21	-13	-15.21	Vertical
3700.4	-56.99	4.04	33.51	-27.52	-13	-14.52	Horizontal
5550.6	-57.72	5.24	35.84	-27.12	-13	-14.12	Vertical
5550.6	-59.63	5.24	35.84	-29.03	-13	-16.03	Horizontal
105.3	-55.98	1.40	15.14	-42.24	-13	-29.24	Vertical
247.6	-55.36	1.45	17.54	-39.27	-13	-26.27	Horizontal
Test Results for Channel 661/1880.0MHz							
3760	-48.07	4.04	33.56	-18.55	-13	-5.55	Vertical
3760	-57.88	4.04	33.56	-28.36	-13	-15.36	Horizontal
5640	-55.35	5.24	35.91	-24.68	-13	-11.68	Vertical
5640	-57.27	5.24	35.91	-26.60	-13	-13.60	Horizontal
187.9	-50.58	1.74	16.40	-35.92	-13	-22.92	Vertical
86.7	-44.55	1.42	15.72	-30.24	-13	-17.24	Horizontal
Test Results for Channel 810/1909.8MHz							
3819.6	-57.43	4.04	34.00	-27.47	-13	-14.47	Vertical
3819.6	-57.36	4.04	34.00	-27.40	-13	-14.40	Horizontal
5729.4	-55.4	5.24	36.04	-24.60	-13	-11.60	Vertical
5729.4	-58.04	5.24	36.04	-27.24	-13	-14.24	Horizontal
217.3	-50.27	1.67	17.51	-34.43	-13	-21.43	Vertical
112.7	-44.19	1.58	17.73	-28.04	-13	-15.04	Horizontal

Remark:
1. We were tested all Configuration refer 3GPP TS134 121.
2. Emission Level= SG Level- Cable Loss+ Antenna Factor
3. Over Limit= Emission Level(dBm)-Limit(dBm)

***GPRS* 1900**							
Frequency	SG Level	Cable Loss	Antenna Factor	Absolute Level	Limit	Over Limit	Polarity
(MHz)	(dBm)	(dB)	(dB)	(dBm)	(dBm)	(dBm)	
Test Results for Channel 512/1850.2MHz							
3700.4	-57.83	4.04	33.51	-28.36	-13	-15.36	Vertical
3700.4	-57.43	4.04	33.51	-27.96	-13	-14.96	Horizontal
5550.6	-56.48	5.24	35.84	-25.88	-13	-12.88	Vertical
5550.6	-55.05	5.24	35.84	-24.45	-13	-11.45	Horizontal
249.9	-50.75	1.66	17.06	-35.36	-13	-22.36	Vertical
237.9	-52.79	1.34	15.54	-38.59	-13	-25.59	Horizontal
Test Results for Channel 661/1880.0MHz							
3760	-58.39	4.04	33.56	-28.87	-13	-15.87	Vertical
3760	-56.01	4.04	33.56	-26.49	-13	-13.49	Horizontal
5640	-57.88	5.24	35.91	-27.21	-13	-14.21	Vertical
5640	-51.6	5.24	35.91	-20.93	-13	-7.93	Horizontal
168.5	-44.95	1.33	16.18	-30.10	-13	-17.10	Vertical
249.4	-47.29	1.60	17.99	-30.90	-13	-17.90	Horizontal
Test Results for Channel 810/1909.8MHz							
3819.6	-56.32	4.04	34.00	-26.36	-13	-13.36	Vertical
3819.6	-54.41	4.04	34.00	-24.45	-13	-11.45	Horizontal
5729.4	-54.11	5.24	36.04	-23.31	-13	-10.31	Vertical
5729.4	-56.1	5.24	36.04	-25.30	-13	-12.30	Horizontal
206.6	-50.54	1.65	17.27	-34.93	-13	-21.93	Vertical
227.8	-51.51	1.39	15.49	-37.42	-13	-24.42	Horizontal

Remark:
1. We were tested all Configuration refer 3GPP TS134 121.
2. Emission Level= SG Level- Cable Loss+ Antenna Factor
3. Over Limit= Emission Level(dBm)-Limit(dBm)

***EGPRS* 1900**							
Frequency	SG Level	Cable Loss	Antenna Factor	Absolute Level	Limit	Over Limit	Polarity
(MHz)	(dBm)	(dB)	(dB)	(dBm)	(dBm)	(dBm)	
Test Results for Channel 512/1850.2MHz							
3700.4	-57.35	4.04	33.51	-27.88	-13	-14.88	Vertical
3700.4	-57.4	4.04	33.51	-27.93	-13	-14.93	Horizontal
5550.6	-55.22	5.24	35.84	-24.62	-13	-11.62	Vertical
5550.6	-54.92	5.24	35.84	-24.32	-13	-11.32	Horizontal
224.9	-50.05	1.41	17.87	-33.59	-13	-20.59	Vertical
105.4	-53.84	1.47	17.45	-37.87	-13	-24.87	Horizontal
Test Results for Channel 661/1880.0MHz							
3760	-54.18	4.04	33.56	-24.66	-13	-11.66	Vertical
3760	-57.71	4.04	33.56	-28.19	-13	-15.19	Horizontal
5640	-58.38	5.24	35.91	-27.71	-13	-14.71	Vertical
5640	-58.49	5.24	35.91	-27.82	-13	-14.82	Horizontal
110.0	-48.75	1.35	15.31	-34.80	-13	-21.80	Vertical
231.5	-45.18	1.48	17.05	-29.61	-13	-16.61	Horizontal
Test Results for Channel 810/1909.8MHz							
3819.6	-56.71	4.04	34.00	-26.75	-13	-13.75	Vertical
3819.6	-58.32	4.04	34.00	-28.36	-13	-15.36	Horizontal
5729.4	-57.19	5.24	36.04	-26.39	-13	-13.39	Vertical
5729.4	-57.72	5.24	36.04	-26.92	-13	-13.92	Horizontal
156.0	-51.06	1.49	17.71	-34.84	-13	-21.84	Vertical
144.9	-46.16	1.55	15.08	-32.63	-13	-19.63	Horizontal

Remark:
1. We were tested all Configuration refer 3GPP TS134 121.
2. Emission Level= SG Level- Cable Loss+ Antenna Factor
3. Over Limit= Emission Level(dBm)-Limit(dBm)

WCDMA Band V							
Frequency	SG Level	Cable Loss	Antenna Factor	Absolute Level	Limit	Over Limit	Polarity
(MHz)	(dBm)	(dB)	(dB)	(dBm)	(dBm)	(dBm)	
Test Results for Channel 4233/846.6MHz							
1693.2	-49.48	2.80	27.50	-24.78	-13	-11.78	Vertical
1693.2	-52.04	2.80	27.50	-27.34	-13	-14.34	Horizontal
2539.8	-47.91	2.91	27.80	-23.02	-13	-10.02	Vertical
2539.8	-51.05	2.91	27.80	-26.16	-13	-13.16	Horizontal
3386.4	-45.26	4.02	29.87	-19.41	-13	-6.41	Vertical
3386.4	-53.49	4.02	29.87	-27.64	-13	-14.64	Horizontal
264.3	-45.64	1.75	15.49	-31.90	-13	-18.90	Vertical
209.9	-51.96	1.37	16.58	-36.75	-13	-23.75	Horizontal
Test Results for Channel 4182/836.4MHz							
1672.8	-49.18	2.80	27.48	-24.50	-13	-11.50	Vertical
1672.8	-49.61	2.80	27.48	-24.93	-13	-11.93	Horizontal
2509.2	-46.23	2.91	27.70	-21.44	-13	-8.44	Vertical
2509.2	-47.55	2.91	27.70	-22.76	-13	-9.76	Horizontal
3345.6	-51	4.02	29.82	-25.20	-13	-12.20	Vertical
3345.6	-45.59	4.02	29.82	-19.79	-13	-6.79	Horizontal
255.8	-50.12	1.68	17.84	-33.96	-13	-20.96	Vertical
129.8	-44.35	1.49	16.34	-29.49	-13	-16.49	Horizontal
Test Results for Channel 4132/826.4MHz							
1652.8	-49.75	2.80	27.42	-25.13	-13	-12.13	Vertical
1652.8	-52.47	2.80	27.42	-27.85	-13	-14.85	Horizontal
2479.2	-46.81	2.91	27.68	-22.04	-13	-9.04	Vertical
2479.2	-48.55	2.91	27.68	-23.78	-13	-10.78	Horizontal
3305.6	-45.89	4.02	29.80	-20.11	-13	-7.11	Vertical
3305.6	-46.98	4.02	29.80	-21.20	-13	-8.20	Horizontal
135.6	-47.22	1.36	17.52	-31.06	-13	-18.06	Vertical
190.6	-51.41	1.63	15.02	-38.02	-13	-25.02	Horizontal

Remark:
1. We were tested all Configuration refer 3GPP TS134 121.
2. Emission Level= SG Level- Cable Loss+ Antenna Factor
3. Over Limit= Emission Level(dBm)-Limit(dBm)

WCDMA Band II							
Frequency	SG Level	Cable Loss	Antenna Factor	Absolute Level	Limit	Over Limit	Polarity
(MHz)	(dBm)	(dB)	(dB)	(dBm)	(dBm)	(dBm)	
Test Results for Channel 9262/1852.4MHz							
3704.8	-56.46	4.04	33.51	-26.99	-13	-13.99	Vertical
3704.8	-57.89	4.04	33.51	-28.42	-13	-15.42	Horizontal
5557.2	-56.84	5.24	35.84	-26.24	-13	-13.24	Vertical
5557.2	-56.34	5.24	35.84	-25.74	-13	-12.74	Horizontal
91.6	-47.17	1.66	17.47	-31.36	-13	-18.36	Vertical
104.4	-53.19	1.38	16.18	-38.39	-13	-25.39	Horizontal
Test Results for Channel 9400/1880MHz							
3760	-54.8	4.04	33.56	-25.28	-13	-12.28	Vertical
3760	-56.73	4.04	33.56	-27.21	-13	-14.21	Horizontal
5640	-57.3	5.24	35.91	-26.63	-13	-13.63	Vertical
5640	-55.5	5.24	35.91	-24.83	-13	-11.83	Horizontal
121.2	-49.39	1.38	16.34	-34.43	-13	-21.43	Vertical
167.8	-45	1.34	16.03	-30.31	-13	-17.31	Horizontal
Test Results for Channel 9538/1907.6MHz							
3815.2	-55.13	4.04	34.00	-25.17	-13	-12.17	Vertical
3815.2	-55.53	4.04	34.00	-25.57	-13	-12.57	Horizontal
5722.8	-54.74	5.24	36.04	-23.94	-13	-10.94	Vertical
5722.8	-54.23	5.24	36.04	-23.43	-13	-10.43	Horizontal
135.9	-50.67	1.51	15.52	-36.66	-13	-23.66	Vertical
247.5	-47.33	1.32	17.18	-31.48	-13	-18.48	Horizontal

Remark:
1. We were tested all Configuration refer 3GPP TS134 121.
2. Emission Level= SG Level- Cable Loss+ Antenna Factor
3. Over Limit= Emission Level(dBm)-Limit(dBm)

WCDMA Band Ⅳ							
Frequency	SG Level	Cable Loss	Antenna Factor	Absolute Level	Limit	Over Limit	Polarity
(MHz)	(dBm)	(dB)	(dB)	(dBm)	(dBm)	(dBm)	
Test Results for Channel 1312/1712.4MHz							
3424.8	-52.59	4.02	29.80	-26.81	-13	-13.81	Vertical
3424.8	-52.25	4.02	29.80	-26.47	-13	-13.47	Horizontal
5137.2	-52.21	5.24	35.84	-21.61	-13	-8.61	Vertical
5137.2	-52.89	5.24	35.84	-22.29	-13	-9.29	Horizontal
81.8	-52.01	1.66	15.00	-38.67	-13	-25.67	Vertical
115.1	-52.18	1.58	16.20	-37.56	-13	-24.56	Horizontal
Test Results for Channel 1412/1732.4MHz							
3464.8	-51.29	4.03	30.00	-25.32	-13	-12.32	Vertical
3464.8	-49.04	4.03	30.00	-23.07	-13	-10.07	Horizontal
5197.2	-53.52	5.25	35.86	-22.91	-13	-9.91	Vertical
5197.2	-51.91	5.25	35.86	-21.30	-13	-8.30	Horizontal
246.8	-48.77	1.55	16.39	-33.92	-13	-20.92	Vertical
101.0	-45.98	1.32	16.25	-31.05	-13	-18.05	Horizontal
Test Results for Channel 1513/1752.6MHz							
3505.2	-49.08	2.91	27.68	-24.31	-13	-11.31	Vertical
3505.2	-49.4	2.91	27.68	-24.63	-13	-11.63	Horizontal
5257.8	-52.3	5.26	35.86	-21.70	-13	-8.70	Vertical
5257.8	-51.12	5.26	35.86	-20.52	-13	-7.52	Horizontal
199.0	-51.95	1.33	15.78	-37.50	-13	-24.50	Vertical
193.1	-50.62	1.47	17.42	-34.67	-13	-21.67	Horizontal

Remark:
1. We were tested all Configuration refer 3GPP TS134 121.
2. Emission Level= SG Level- Cable Loss+ Antenna Factor
3. Over Limit= Emission Level(dBm)-Limit(dBm)

7.2 EFFECTIVE RADIATED POWER AND EFFECTIVE ISOTROPIC RADIATED POWER

7.2.1 Applicable Standard

According to FCC KDB 971168 D01 v03 Section 5.2.1/ Section 5.2.2.2 and ANSI/TIA-603-E-2016 Section 2.2.17

7.2.2 Conformance Limit

The substitution method, in ANSI/TIA-603-E-2016, was used for ERP/EIRP measurement, and the spectrum analyzer configuration follows KDB 971168 D01 Power Meas. License Digital Systems v03. The ERP of mobile transmitters must not exceed 7 Watts (Cellular Band) and the EIRP of mobile transmitters are limited to 2 Watts (PCS Band). The following power and antenna height requirements apply to stations transmitting in the 1710–1755 MHz and 2110–2155 MHz bands: Fixed, mobile, and portable (hand-held) stations operating in the 1710–1755 MHz band are limited to 1 watt EIRP.

7.2.3 Measuring Instruments

The Measuring equipment is listed in the section 6.3 of this test report.

7.2.4 Test Configuration

(a) For E.R.P and E.I.R.P Measurements
Please refer to the section 7.1.4 in this report.

7.2.5 Test Procedure

The measurements procedures specified in ANSI/TIA-603-E-2016 were applied.
In an anechoic antenna test chamber, a half-wave dipole antenna for the frequency band of interest is placed at the reference centre of the chamber. An RF Signal source for the frequency band of interest is connected to the dipole with a cable that has been constructed to not interfere with the radiation pattern of the antenna. A known (measured) power (Pin) is applied to the input of the dipole, and the power received (Pr) at the chamber's probe antenna is recorded.

The relevant equation for determining the ERP or EIRP from the conducted RF output power measured using the guidance provided above is:
ERP/EIRP = SGLevel -Pcl +Ga
where:
ERP/EIRP = effective or equivalent radiated power, respectively (expressed in the same units as SGLevel, typically dBW or dBm);
SGLevel = Signal generator output power or PSD, in dBm or dBW;
Ga = gain of the transmitting antenna, in dBd (ERP) or dBi (EIRP);
Pcl = signal attenuation in the connecting cable between the transmitter and antenna, in dB.[2]

The EUT is substituted for the dipole at the reference centre of the chamber and a scan is performed to obtain the radiation pattern.
From the radiation pattern, the co-ordinates where the maximum antenna gain occurs are identified.

The EUT is then put into continuously transmitting mode at its maximum power level.
Power mode measurements are performed with the receiving antenna placed at the coordinates determined in Step 3 to determine the output power as defined in Rule 24.232 (b) and (c). The "reference path loss" from Step1 is added to this result.

This value is EIRP since the measurement is calibrated using a half-wave dipole antenna of known gain (2.15 dBi) and known input power (Pin).
ERP can be calculated from EIRP by subtracting the gain of the dipole, ERP = EIRP -2.15dBi.

Both horizontal and vertical antenna polarities were tested and performed pretest to three orthogonal axis. The worst case emissions were reported.

Substitution antenna and Receiving Antenna:

Item	Kind of Equipment	Manufacturer	Type No.	Serial No.	Character	Note
1	Log-Periodic Antenna	SCHWARZBECK	VULB 9162	584	30MHz~2GHz	Receiving Antenna
2	Broadband Horn Antenna	SCHWARZBECK	BBHA 9120 D	2816	1GHz~18GHz	Receiving Antenna
3	Log-Periodic Antenna	SCHWARZBECK	VULB 9162	586	30MHz~2GHz	Substitution antenna
4	Broadband Horn Antenna	SCHWARZBECK	BBHA 9120 D	2817	1GHz~18GHz	Substitution antenna

Use the following spectrum analyzer settings:

	GSM/GPRS/EGPRS	UMTS band
Span	500KHz	10MHz
RBW	10KHz	300KHz
VBW	30KHz	1MHz
Detector	RMS	RMS
Trace	Average	Average
Average Type	Power	Power
Sweep Count	100	100

7.2.6 Test Results

EUT:	Smart Phone	Model No.:	WP60
Temperature:	20 ℃	Relative Humidity:	48%
Test Mode:	GSM/GPRS/EGPRS 850, GSM/GPRS/EGPRS 1900, UMTS band II/ UMTS band V/UMTS band Ⅳ	Test By:	Allen Liu

■ Effective Radiated Power

Radiated Power (ERP) for GSM850									
Frequency	Polarization	SG Level	Pcl	Antenna Factor	Correction	ERP	ERP	Limit	Verdict
(MHz)		(dBm)	(dB)	(dB)	(dB)	(dBm)	(W)	(W)	
824.2	H	11.45	2.11	23.84	2.15	31.03	1.267652	7	Pass
836.6	H	11.76	2.13	23.15	2.15	30.63	1.156112	7	Pass
848.8	H	11.49	2.13	23.06	2.15	30.27	1.064143	7	Pass
824.2	V	11.45	2.11	23.11	2.15	30.30	1.071519	7	Pass
836.6	V	11.52	2.13	23.07	2.15	30.31	1.073989	7	Pass
848.8	V	12.04	2.13	23.25	2.15	31.01	1.261828	7	Pass

Radiated Power (ERP) for GPRS850									
Frequency	Polarization	SG Level	Pcl	Antenna Factor	Correction	ERP	ERP	Limit	Verdict
(MHz)		(dBm)	(dB)	(dB)	(dB)	(dBm)	(W)	(W)	
824.2	H	11.47	2.11	23.84	2.15	**31.05**	1.273503	7	Pass
836.6	H	11.31	2.13	23.15	2.15	30.18	1.042317	7	Pass
848.8	H	11.35	2.13	23.06	2.15	30.13	1.030386	7	Pass
824.2	V	12.03	2.11	23.11	2.15	30.88	1.224616	7	Pass
836.6	V	11.63	2.13	23.07	2.15	30.42	1.101539	7	Pass
848.8	V	11.24	2.13	23.25	2.15	30.21	1.049542	7	Pass

Radiated Power (ERP) for EGPRS850									
Frequency	Polarization	SG Level	Pcl	Antenna Factor	Correction	ERP	ERP	Limit	Verdict
(MHz)		(dBm)	(dB)	(dB)	(dB)	(dBm)	(W)	(W)	
824.2	H	6.08	2.11	23.84	2.15	25.66	0.368129	7	Pass
836.6	H	6.45	2.13	23.15	2.15	25.32	0.340408	7	Pass
848.8	H	7.02	2.13	23.06	2.15	25.80	0.380189	7	Pass
824.2	V	6.77	2.11	23.11	2.15	25.62	0.364754	7	Pass
836.6	V	7.11	2.13	23.07	2.15	**25.90**	0.389045	7	Pass
848.8	V	6.16	2.13	23.25	2.15	25.13	0.325837	7	Pass

Radiated Power (E.I.R.P) for GSM1900								
Frequency	Polarization	SG Level	Pcl	Antenna Factor	EIRP	EIRP	Limit	Verdict
(MHz)		(dBm)	(dB)	(dB)	(dBm)	(W)	(W)	
1850.2	H	4.37	3.76	28.24	28.85	0.767361	2	Pass
1880	H	4.18	3.91	28.22	28.49	0.706318	2	Pass
1909.8	H	4.36	3.93	28.20	28.63	0.729458	2	Pass
1850.2	V	4.97	3.76	27.32	28.53	0.712853	2	Pass
1880	V	5.53	3.91	27.33	28.95	0.785236	2	Pass
1909.8	V	5.68	3.93	27.31	29.06	0.805378	2	Pass

Radiated Power (E.I.R.P) for GPRS1900								
Frequency	Polarization	SG Level	Pcl	Antenna Factor	EIRP	EIRP	Limit	Verdict
(MHz)		(dBm)	(dB)	(dB)	(dBm)	(W)	(W)	
1850.2	H	3.77	3.76	28.24	28.25	0.668344	2	Pass
1880	H	4.68	3.91	28.22	28.99	0.792501	2	Pass
1909.8	H	4.48	3.93	28.20	28.75	0.749894	2	Pass
1850.2	V	4.93	3.76	27.32	28.49	0.706318	2	Pass
1880	V	4.97	3.91	27.33	28.39	0.690240	2	Pass
1909.8	V	5.71	3.93	27.31	**29.09**	0.810961	2	Pass

Radiated Power (E.I.R.P) for EGPRS1900								
Frequency	Polarization	SG Level	Pcl	Antenna Factor	EIRP	EIRP	Limit	Verdict
(MHz)		(dBm)	(dB)	(dB)	(dBm)	(W)	(W)	
1850.2	H	0.57	3.76	28.24	**25.05**	0.319890	2	Pass
1880	H	0.56	3.91	28.22	24.87	0.306902	2	Pass
1909.8	H	0.04	3.93	28.20	24.31	0.269774	2	Pass
1850.2	V	0.78	3.76	27.32	24.34	0.271644	2	Pass
1880	V	1.16	3.91	27.33	24.58	0.287078	2	Pass
1909.8	V	1.42	3.93	27.31	24.80	0.301995	2	Pass

Radiated Power (E.I.R.P) for UMTS band II								
Frequency	Polarization	SG Level	Pcl	Antenna Factor	EIRP	EIRP	Limit	Verdict
(MHz)		(dBm)	(dB)	(dB)	(dBm)	(W)	(W)	
1852.4	H	-3.00	3.76	28.24	21.48	0.140605	2	Pass
1880	H	-1.65	3.91	28.22	22.66	0.184502	2	Pass
1907.6	H	-2.45	3.93	28.20	21.82	0.152055	2	Pass
1852.4	V	-0.67	3.76	27.32	22.89	0.194536	2	Pass
1880	V	-0.49	3.91	27.33	22.93	0.196336	2	Pass
1907.6	V	-0.35	3.93	27.31	**23.03**	0.200909	2	Pass

Radiated Power (E.I.R.P) for UMTS band Ⅳ								
Frequency	Polarization	SG Level	Pcl	Antenna Factor	EIRP	EIRP	Limit	Verdict
(MHz)		(dBm)	(dB)	(dB)	(dBm)	(W)	(W)	
1712.4	H	-2.99	3.13	27.63	21.51	0.141579	1	Pass
1732.4	H	-2.79	3.27	27.61	21.55	0.142889	1	Pass
1752.6	H	-2.69	3.30	27.60	21.61	0.144877	1	Pass
1712.4	V	-2.59	3.13	27.63	**21.91**	0.155239	1	Pass
1732.4	V	-3.21	3.27	27.61	21.13	0.129718	1	Pass
1752.6	V	-3.01	3.30	27.60	21.29	0.134586	1	Pass

Radiated Power (ERP) for UMTS band V									
Frequency	Polarization	SG Level	Pcl	Antenna Factor	Correction	ERP	ERP	Limit	Verdict
(MHz)		(dBm)	(dB)	(dB)	(dB)	(dBm)	(W)	(W)	
826.4	H	2.70	2.11	23.84	2.15	**22.28**	0.169044	7	Pass
835	H	3.32	2.13	23.15	2.15	22.19	0.165577	7	Pass
846.6	H	3.14	2.13	23.06	2.15	21.92	0.155597	7	Pass
826.4	V	2.54	2.11	23.11	2.15	21.39	0.137721	7	Pass
835	V	3.39	2.13	23.07	2.15	22.18	0.165196	7	Pass
846.6	V	2.60	2.13	23.25	2.15	21.57	0.143549	7	Pass

Note:
SG Level= Signal generator output
Pcl= cable loss
Ga= Antenna Factor
Peak EIRP(dBm)= SGLevel -Pcl +Ga
ERP(dBm)=EIRP-2.15

7.3 CONDUCTED OUTPUT POWER

7.3.1 Applicable Standard

According to FCC Part 2.1046 and FCC Part 22.913(a)(2)) and FCC KDB 971168 D01 v03 Section 5.2

7.3.2 Conformance Limit

Extend coverage on a secondary basis into cellular unserved areas, as those areas are defined in §22.949, the ERP of base transmitters and cellular repeaters of such systems must not exceed 1000 Watts. The ERP of mobile transmitters and auxiliary test transmitters must not exceed 7 Watts(38.5dBm).

Mobile and portable stations are limited to 2 watts (33dBm)EIRP and the equipment must employ a means for limiting power to the minimum necessary for successful communications..

For CDMA2000 Power: Maximum output power is verified on the Low,Middle and High channels according to procedures in section 4.4.5.2.of 3GPP2 C.S0011/TIA-98-E for 1Xrtt, section 3.1.2.3.4 of 3GPP2 C.S0033-0/TIA-866 for Rel.0 and section 4.3.4 of 3GPP2 C.S0033-A for Rev.A.

7.3.3 Measuring Instruments

The Measuring equipment is listed in the section 6.3 of this test report.

7.3.4 Test Setup

Please refer to Section 6.1 of this test report.

7.3.5 Test Procedure

Connect the EUT to Universal Radio Communication Tester CMU200 or CMU500 via the antenna connector.
A call is set up by the SS according to the generic call set up procedure on a channel with ARFCN in the ARFCN range, power control level set to Max power. The frequency band is set as selected frequency,
The RF output of the transmitter was connected to base station simulator.
Set EUT at maximum average power by base station simulator.
Set RBW = 1-5% of the OBW, not to exceed 1 MHz.
Set VBW ≥ 3 × RBW.
Number of points in sweep ≥ 2 × span / RBW. (This gives bin-to-bin spacing ≤ RBW/2, so that narrowband signals are not lost between frequency bins.)
Sweep time = auto.
Detector = RMS (power averaging).
Set sweep trigger to “free run”.
Trace average at least 100 traces in power averaging (i.e., RMS) mode; however, the number of traces to be averaged shall be increased above 100 as needed such that the average accurately represents the true average over the on and off periods of the transmitter.
Compute power by integrating the spectrum across the OBW of the signal using the instrument’s band power measurement function with band limits set equal to the OBW band edges. If the instrument does not have a band power function, sum the spectrum levels (in power units) at intervals equal to the RBW extending across the entire OBW of the spectrum.
Add 10 log (1/x), where x is the duty cycle, to the measured power in order to compute the average power during the actual transmission times (because the measurement represents an average over both the on and off times of the transmission). For example, add 10 log (1/0.25) = 6 dB if the duty cycle is a constant 25%.
Measure lowest, middle, and highest channels for each bandwidth and different modulation.
Measure and record the results in the test report.

7.3.6 Test Results

EUT:	Smart Phone	Model No.:	WP60
Temperature:	20 ℃	Relative Humidity:	48%
Test Mode:	GSM/GPRS/EGPRS 850, GSM/GPRS/EGPRS 1900, UMTS band II/ UMTS band V/ UMTS band Ⅳ	Test By:	Allen Liu

Test data reference attachment

7.4 FREQUENCY STABILITY

7.4.1 Applicable Standard

According to FCC Part 2.1055 and FCC Part 22.355 and FCC KDB 971168 D01 Section 9.0

7.4.2 Conformance Limit

The frequency stability shall be measured by variation of ambient temperature and variation of primary supply voltage to ensure that the fundamental emission stays within the authorized frequency block. The frequency stability of the transmitter shall be maintained within ±0.00025% (±2.5ppm) of the center frequency.

7.4.3 Measuring Instruments

The Measuring equipment is listed in the section 6.3 of this test report.

7.4.4 Test Setup

Please refer to Section 6.1 of this test report.

7.4.5 Test Procedure

Connect the EUT to Universal Radio Communication Tester CMU200 or CMU500 via the antenna connector. A call is set up by the SS according to the generic call set up procedure on a channel with ARFCN in the ARFCN range, power control level set to Max power. MS TXPWR_MAX_CCH is set to the maximum value supported by the Power Class of the Mobile under test.
EUT was placed at temperature chamber and connected to an external power supply.
Temperature and voltage condition shall be tested to confirm frequency stability.
For Temperature Variation

1. The testing follows FCC KDB 971168 D01 v03 Section 9.0.
2. The EUT was set up in the thermal chamber and connected with the system simulator.
3. With power OFF, the temperature was decreased to -30°C and the EUT was stabilized before testing. Power was applied and the maximum change in frequency was recorded within one minute.
4. With power OFF, the temperature was raised in 10°C steps up to 50°C. The EUT was stabilized at each step for at least half an hour. Power was applied and the maximum frequency change was recorded within one minute.

For Voltage Variation

1. The testing follows FCC KDB 971168 D01 v03 Section 9.0.
2. The EUT was placed in a temperature chamber at 25±5° C and connected with the system simulator.
3. The power supply voltage to the EUT was varied from 85% to 115% of the nominal value measured at the input to the EUT.
4. The variation in frequency was measured for the worst case.

7.4.6 Test Results

EUT:	Smart Phone	Model No.:	WP60
Temperature:	20 ℃	Relative Humidity:	48%
Test Mode:	GSM/GPRS/EGPRS 850, GSM/GPRS/EGPRS 1900, UMTS band II/ UMTS band V/ UMTS band Ⅳ	Test By:	Allen Liu
Results: PASS			

Frequency Error Against Voltage for GSM 850 band(Mid CH)		
Voltage (V)	Frequency Error (Hz)	Frequency Error (ppm)
3.29	6.29	0.007520
3.87	7.19	0.008596
4.45	8.98	0.010736

Frequency Error Against Temperature for GSM 850 band(Mid CH)		
Temperature (℃)	Frequency Error (Hz)	Frequency Error (ppm)
-30	7.18	0.008584
-20	7.99	0.009553
-10	9.14	0.010928
0	6.61	0.007903
10	8.75	0.010462
20	7.58	0.009063
30	6.29	0.007520
40	8.42	0.010067
50	10.78	0.012889

Frequency Error Against Voltage for GPRS850 band(Mid CH)		
Voltage (V)	Frequency Error (Hz)	Frequency Error (ppm)
3.29	9.42	0.011263
3.87	9.69	0.011585
4.45	7.79	0.009314

Frequency Error Against Temperature for GPRS850 band(Mid CH)		
Temperature (℃)	Frequency Error (Hz)	Frequency Error (ppm)
-30	6.87	0.008214
-20	6.69	0.007999
-10	9.77	0.011681
0	6.33	0.007568
10	6.16	0.007365
20	6.61	0.007903
30	8.37	0.010007
40	8.29	0.009912
50	10.04	0.012004

Frequency Error Against Voltage for EGPRS850 band(Mid CH)		
Voltage (V)	Frequency Error (Hz)	Frequency Error (ppm)
3.29	8.78	0.010497
3.87	8.47	0.010127
4.45	6.75	0.008070

Frequency Error Against Temperature for EGPRS850 band(Mid CH)		
Temperature (℃)	Frequency Error (Hz)	Frequency Error (ppm)
-30	5.97	0.007138
-20	9.72	0.011621
-10	6.72	0.008034
0	6.64	0.007939
10	7.04	0.008417
20	7.96	0.009517
30	6.63	0.007927
40	6.67	0.007975
50	11	0.013152

Note:
1. Normal Voltage = 3.87V; Battery End Point (BEP) = 3.29V; Maximum Voltage =4.45V
2. The frequency fundamental emissions stay within the authorized frequency block based on the frequency deviation measured is small.

Frequency Error Against Voltage for PCS 1900 band (Mid CH)		
Voltage (V)	Frequency Error (Hz)	Frequency Error (ppm)
3.29	17.83	0.009484
3.87	19.93	0.010601
4.45	16.03	0.008527

Frequency Error Against Temperature for PCS 1900 band (Mid CH)		
Temperature (℃)	Frequency Error (Hz)	Frequency Error (ppm)
-30	17.23	0.009165
-20	16.11	0.008569
-10	19.88	0.010574
0	16.98	0.009032
10	20.35	0.010824
20	16.39	0.008718
30	18.68	0.009936
40	20.89	0.011112
50	20.37	0.010835

Frequency Error Against Voltage for GPRS1900 band (Mid CH)		
Voltage (V)	Frequency Error (Hz)	Frequency Error (ppm)
3.29	18.13	0.009644
3.87	16.07	0.008548
4.45	18.86	0.010032

Frequency Error Against Temperature for GPRS1900 band (Mid CH)		
Temperature (℃)	Frequency Error (Hz)	Frequency Error (ppm)
-30	20.33	0.010814
-20	18.97	0.010090
-10	19.09	0.010154
0	17.35	0.009229
10	16.9	0.008989
20	20.61	0.010963
30	19.21	0.010218
40	17.77	0.009452
50	24.03	0.012782

Frequency Error Against Voltage for EGPRS1900 band (Mid CH)		
Voltage (V)	Frequency Error (Hz)	Frequency Error (ppm)
3.29	18.06	0.009606
3.87	20.08	0.010681
4.45	17.5	0.009309

Frequency Error Against Temperature for EGPRS1900 band (Mid CH)		
Temperature (℃)	Frequency Error (Hz)	Frequency Error (ppm)
-30	22.43	0.011931
-20	20.51	0.010910
-10	20.73	0.011027
0	16.88	0.008979
10	20.92	0.011128
20	16.2	0.008617
30	17.88	0.009511
40	20.22	0.010755
50	22.25	0.011835

Note:
1. Normal Voltage = 3.87V; Battery End Point (BEP) = 3.29V; Maximum Voltage =4.45V
2. The frequency fundamental emissions stay within the authorized frequency block based on the frequency deviation measured is small.

Frequency Error Against Voltage for UMTS band II (Mid CH)		
Voltage (V)	Frequency Error (Hz)	Frequency Error (ppm)
3.29	-16.66	-0.008862
3.87	-15.59	-0.008293
4.45	-18.63	-0.009910

Frequency Error Against Temperature for UMTS band II (Mid CH)		
Temperature (℃)	Frequency Error (Hz)	Frequency Error (ppm)
-30	-18.95	-0.010080
-20	-17.73	-0.009431
-10	-19.98	-0.010628
0	-19.63	-0.010441
10	-16.83	-0.008952
20	-15.09	-0.008027
30	-18.92	-0.010064
40	-19.36	-0.010298
50	-18.89	-0.010048

Frequency Error Against Voltage for UMTS band IV (Mid CH)		
Voltage (V)	Frequency Error (Hz)	Frequency Error (ppm)
3.29	-17.93	-0.010350
3.87	-11.38	-0.006569
4.45	-15.98	-0.009224

Frequency Error Against Temperature for UMTS band IV (Mid CH)		
Temperature (℃)	Frequency Error (Hz)	Frequency Error (ppm)
-30	-8.64	-0.004987
-20	-10.08	-0.005819
-10	-11.39	-0.006575
0	-9.41	-0.005432
10	-13.8	-0.007966
20	-16.69	-0.009634
30	-15.87	-0.009161
40	-17.75	-0.010246
50	-21.14	-0.012203

Note:
1. Normal Voltage = 3.87V; Battery End Point (BEP) = 3.29V; Maximum Voltage =4.45V
2. The frequency fundamental emissions stay within the authorized frequency block based on the frequency deviation measured is small.

Frequency Error Against Voltage for UMTS band V (Mid CH)		
Voltage (V)	Frequency Error (Hz)	Frequency Error (ppm)
3.29	-18.21	-0.021772
3.87	-16.03	-0.019165
4.45	-17.58	-0.021019

Frequency Error Against Temperature for UMTS band V (Mid CH)		
Temperature (℃)	Frequency Error (Hz)	Frequency Error (ppm)
-30	-19.85	-0.023733
-20	-15.62	-0.018675
-10	-15.61	-0.018663
0	-16.24	-0.019417
10	-16.91	-0.020218
20	-15.58	-0.018627
30	-17.11	-0.020457
40	-18.93	-0.022633
50	-19.37	-0.023159

Note:
1. Normal Voltage = 3.87V; Battery End Point (BEP) = 3.29V; Maximum Voltage =4.45V
2. The frequency fundamental emissions stay within the authorized frequency block based on the frequency deviation measured is small.

7.5 PEAK-TO-AVERAGE RATIO

7.5.1 Applicable Standard

According to Subclause 5.2.3.4 of ANSI C63.26-2015 and FCC KDB 971168 D01 Section 5.7.1

7.5.2 Conformance Limit

The peak-to-average power ratio (PAPR) of the transmitter output power must not exceed 13 dB. The PAPR measurements should be made using either an instrument with complementary cumulative distribution function (CCDF) capabilities to determine that PAPR will not exceed 13 dB for more than 0.1 percent of the time or other Commission approved procedure. The measurement must be performed using a signal corresponding to the highest PAPR expected during periods of continuous transmission.

7.5.3 Measuring Instruments

The Measuring equipment is listed in the section 6.3 of this test report.

7.5.4 Test Setup

Please refer to Section 6.1 of this test report.

7.5.5 Test Procedure

The EUT was connected to Spectrum Analyzer and Base Station via power divider.
The RF output of EUT was connected to the spectrum analyzer by RF cable and attenuator. The path loss was compensated to the results for each measurement.
Set the number of counts to a value that stabilizes the measured CCDF curve.
Set the measurement interval to 1 ms.
Record the maximum PAPR level associated with a probability of 0.1%.
a) Refer to instrument's analyzer instruction manual for details on how to use the power statistics/CCDF function;
b) Set resolution/measurement bandwidth ≥ signal's occupied bandwidth;
c) Set the number of counts to a value that stabilizes the measured CCDF curve;
d) Set the measurement interval as follows:
1) for continuous transmissions, set to 1 ms,
2) for burst transmissions, employ an external trigger that is synchronized with the EUT burst timing sequence, or use the internal burst trigger with a trigger level that allows the burst to stabilize and set the measurement interval to a time that is less than or equal to the burst duration.
e) Record the maximum PAPR level associated with a probability of 0.1%.

7.5.6 Test Results

EUT:	Smart Phone	Model No.:	WP60
Temperature:	20 ℃	Relative Humidity:	48%
Test Mode:	GSM/GPRS/EGPRS 850, GSM/GPRS/EGPRS 1900, UMTS band II/ UMTS band V/ UMTS band Ⅳ	Test By:	Allen Liu
Results: PASS			

The Test data reference attachment:

7.6 26DB BANDWIDTH AND 99% OCCUPIED BANDWIDTH

7.6.1 Applicable Standard

According to FCC Part 2.1049 and FCC Part 22H and FCC KDB 971168 D01 Section 4

7.6.2 Conformance Limit

The occupied bandwidth is the width of a frequency band such that, below the lower and above the upper frequency limits, the mean powers emitted are each equal to a specified percentage 0.5% of the total mean transmitted power.
The 26 dB emission bandwidth is defined as the frequency range between two points, one above and one below the carrier frequency, at which the spectral density of the emission is attenuated 26 dB below the maximum in-band spectral density of the modulated signal. Spectral density (power per unit bandwidth) is to be measured with a detector of resolution bandwidth equal to approximately 1.0% of the emission bandwidth.

7.6.3 Measuring Instruments

The Measuring equipment is listed in the section 6.3 of this test report.

7.6.4 Test Setup

Please refer to Section 6.1 of this test report.

7.6.5 Test Procedure

The testing follows FCC KDB 971168 v03 Section 4.
The EUT was connected to Spectrum Analyzer and Base Station via power divider.
The RF output of EUT was connected to the spectrum analyzer by RF cable and attenuator. The path loss was compensated to the results for each measurement.
The spectrum analyzer center frequency is set to the nominal EUT channel center frequency. The span range for the spectrum analyzer shall be between two and five times the anticipated OBW.
The nominal resolution bandwidth (RBW) shall be in the range of 1 to 5 % of the anticipated OBW, and the VBW shall be at least 3 times the RBW.
Set the detection mode to peak, and the trace mode to max hold.
Determine the reference value: Set the EUT to transmit a modulated signal. Allow the trace to stabilize. Set the spectrum analyzer marker to the highest level of the displayed trace.
(this is the reference value)
Determine the “-26 dB down amplitude” as equal to (Reference Value – X).
Place two markers, one at the lowest and the other at the highest frequency of the envelope of the spectral display such that each marker is at or slightly below the “–X dB down amplitude” determined in step 6. If a marker is below this “-X dB down amplitude” value it shall be placed as close as possible to this value. The OBW is the positive frequency difference between the two markers.
Use the 99 % power bandwidth function of the spectrum analyzer and report the measured bandwidth.

7.6.6 Test Results

EUT:	Smart Phone	Model No.:	WP60
Temperature:	20 ℃	Relative Humidity:	48%
Test Mode:	GSM/GPRS/EGPRS 850, GSM/GPRS/EGPRS 1900, UMTS band II/ UMTS band V/ UMTS band Ⅳ	Test By:	Allen Liu
Results: PASS			

The Test data reference attachment:

7.7 CONDUCTED BAND EDGE

7.7.1 Applicable Standard

According to FCC Part 2.1051 and FCC Part 22.917(a) and FCC KDB 971168 D01 Section6.

7.7.2 Conformance Limit

The power of any emission outside of the authorized operating frequency ranges must be lower than the transmitter power (P) by a factor of at least 43 + 10 log (P) dB.

7.7.3 Measuring Instruments

The Measuring equipment is listed in the section 6.3 of this test report.

7.7.4 Test Setup

Please refer to Section 6.1 of this test report.

7.7.5 Test Procedure

The testing follows FCC KDB 971168 v03 Section 6.
The EUT was connected to Spectrum Analyzer and Base Station via power divider.
The RF output of EUT was connected to the spectrum analyzer by RF cable and attenuator.
The path loss was compensated to the results for each measurement.
The band edges of low and high channels for the highest RF powers were measured.
The RF fundamental frequency should be excluded against the limit line in the operating frequency band.
The limit line is derived from 43 + 10log(P) dB below the transmitter power P(Watts)

= P(W) - [43 + 10log(P)] (dB)
= [30 + 10log(P)] (dBm) - [43 + 10log(P)] (dB)
= -13dBm.

7.7.6 Test Results

EUT:	Smart Phone	Model No.:	WP60
Temperature:	20 ℃	Relative Humidity:	48%
Test Mode:	GSM/GPRS/EGPRS 850, GSM/GPRS/EGPRS 1900, UMTS band II/ UMTS band V/ UMTS band Ⅳ	Test By:	Allen Liu
Results: PASS			

The Test data reference attachment:

7.8 CONDUCTED SPURIOUS EMISSION AT ANTENNA TERMINAL

7.8.1 Applicable Standard

According to FCC Part 2.1051 and FCC Part 22.917(a) and FCC KDB 971168 D01 Section6.

7.8.2 Conformance Limit

The power of any emission outside of the authorized operating frequency ranges must be lower than the transmitter power (P) by a factor of at least 43 + 10 log (P) dB.
It is measured by means of a calibrated spectrum analyzer and scanned from 30 MHz up to a frequency including its 10th harmonic.

7.8.3 Measuring Instruments

The Measuring equipment is listed in the section 6.3 of this test report.

7.8.4 Test Setup

Please refer to Section 6.1 of this test report.

7.8.5 Test Procedure

The testing follows FCC KDB 971168 v03 Section 6.
The EUT was connected to Spectrum Analyzer and Base Station via power divider.
The RF output of EUT was connected to the spectrum analyzer by RF cable and attenuator.
The path loss was compensated to the results for each measurement.
The middle channel for the highest RF power within the transmitting frequency was measured.
The conducted spurious emission for the whole frequency range was taken.
The RF fundamental frequency should be excluded against the limit line in the operating frequency band.
The limit line is derived from 43 + 10log(P) dB below the transmitter power P(Watts)

= P(W) - [43 + 10log(P)] (dB)
= [30 + 10log(P)] (dBm) - [43 + 10log(P)] (dB)
= -13dBm.

7.8.6 Test Results

EUT:	Smart Phone	Model No.:	WP60
Temperature:	20 ℃	Relative Humidity:	48%
Test Mode:	GSM/GPRS/EGPRS 850, GSM/GPRS/EGPRS 1900, UMTS band II/ UMTS band V/ UMTS band Ⅳ	Test By:	Allen Liu
Results: PASS			

The Test data reference attachment:

END OF REPORT