Linkplay Wireless Smart Audio Module (A98ML)

User Manual

Revision 0.4

September 10, 2019

HISTORY

Revision	Date	Description
0.1	05/15/2018	Datasheet Release
0.2	05/08/2019	Dimension and screw holes update
0.3	07/31/2019	Add I/O Power Domain Information
0.4	08/02/2019	Update Bluetooth Version

INDEX

1. Overview 4
   1.1. Parameter 5
2. Hardware Description 6
   2.1. Description of Hardware Interface 6
   2.2. Mechanical Dimension 10
   2.3. External Antenna 13
   2.4. Typical Application ..... 错误!未定义书签。
   2.5. Power on Sequence 14
   2.6 USB OTG Port 14
3. Software Introduction 15
   3.1. Feature List 15
   3.2. APP Support 16
   3.3. Certifications 16
4. Module Environmental and Package 16
   4.1. Environmental Ratings 16
   4.2. Electrostatic Discharge Specifications 16

1.Overview

Linkplay Wireless Smart Audio module–A98ML, is our 3rd generation smart audio modules developed to be used in the connected speaker, sound bar and other connected audio devices. It integrates the low power Broadcom BCM43438 Wi-Fi/BT chip and Amlogic A113X application processor. A113X is an advanced application processor designed for connected audio applications. It integrates a powerful CPU subsystem, advanced multi-format audio processing unit, a secured running environment and all major peripherals to form the low power audio AP.

The main system CPU is a quad-core ARM Cortex-A53 CPU with L1 instruction/data cache for each core and a large unified L2 cache to improve system performance. Each Cortex-A53 CPU can run up to 1.5GHz (DVFS + hot plug) and has a wide bus connecting to the memory sub-system. When the system is suspended, the main CPU can be powered off and the Cortex-M3 in the always-on power domain can resume the system from multiple interrupt sources.

The audio processing engine (APE) is based on ARM® NEONTM general-purpose SIMD architecture which works seamlessly with main CPU to accelerate the multimedia processing algorithms, enhancing the user experience. It is able to decode all major high resolution audio formats including MP3, AAC, WMA, RM, FLAC, Ogg, etc and with the flexibility to support future audio standards.

A113X integrates all standard audio input/output interfaces including multiple TDM, PCM, I2S and SPDIF digital audio input/output interfaces, and 8 channel far-field PDM digital microphone (DMIC) inputs. Audio input has power detector to wake up from low activity states and hardware assisted synchronization blocks for multiple room audio applications. Audio input data can be restricted to trusted memory space to protect always-on audio privacy.

A98ML module supports IEEE 802.11 b/g/n 2.4GHz. It also supports BT4.1 with EDR and BLE.

A98ML module also provides USB, I2S, I2C, PDM, SPI, UART etc. interfaces.

The firmware is fully compatible with Apple AirPlay and digital living network alliance (DLNA) streaming standards. It supports Hi-Fi audio up to 192KHz, 24-bit with most popular audio formats. It supports multi-room and multi-channel audio streaming with perfect synchronization.

With this module, you can play the music on your speaker wirelessly from iPhone, iPad , iPod touch, Android devices or PC. More important, it enables the traditional speaker system to become the Internet enabled device through the wired or wireless connection provided by the module. Thus, you could freely playback any Internet audio contents such as music, podcast, radio or either the accompany audio in the movie directly from the Internet.

Features

- Amlogic A113X application processor
- 128MB DRAM
- 128MB NAND FLASH
- Support IEEE 802.11 b/g/n
- Support BT4.1 with EDR and BLE

Application

- Connected speaker, Sound Bar
- Connected audio devices

1.1. Parameter

Type	Items	Performance
Wi-Fi	Certification	TBD
	WLAN Standard	IEEE 802.11 b/g/n Wi-Fi compliant
Wi-Fi (2.4G)	Frequency Range	2.400 GHz ~ 2.483 GHz (2.4 GHz ISM Band)
	Number of Channels	Ch1 ~ Ch13
	Modulation	802.11b : DQPSK, DBPSK, CCK
		802.11g/n : OFDM /64-QAM,16-QAM, QPSK, BPSK
	Output Power	802.11b /11Mbps : 16 dBm ± 1.5 dB @ EVM≤-9dB
		802.11g /54Mbps : 15 dBm ± 1.5 dB @ EVM≤-25dB
		802.11n /MCS7@HT20 : 14 dBm ± 1.5 dB @ EVM≤-27dB
	SISO Receive Sensitivity (11b,20MHz) @8% PER	- 1Mbps PER @ -96 dBm, ± 2 dB
		- 2Mbps PER @ -90 dBm, ± 2 dB
		- 5.5Mbps PER @ -88 dBm, ± 2 dB
		- 11Mbps PER @ -86 dBm, ± 2 dB
	SISO Receive Sensitivity (11g,20MHz) @10% PER	- 6Mbps PER @ -90 dBm, ± 2 dB
		- 9Mbps PER @ -88 dBm, ± 2 dB
		- 12Mbps PER @ -87 dBm, ± 2 dB
		- 18Mbps PER @ -85 dBm, ± 2 dB
		- 24Mbps PER @ -83 dBm, ± 2 dB
		- 36Mbps PER @ -80 dBm, ± 2 dB
		- 48Mbps PER @ -76 dBm, ± 2 dB
		- 54Mbps PER @ -73 dBm, ± 2 dB
	Receive Sensitivity (11n,20MHz) @10% PER	- MCS=0 PER @ -89 dBm, ± 2 dB
		- MCS=1 PER @ -85 dBm, ± 2 dB
		- MCS=2 PER @ -84 dBm, ± 2 dB
		- MCS=3 PER @ -80 dBm, ± 2 dB
		- MCS=4 PER @ -77 dBm, ± 2 dB
		- MCS=5 PER @ -75 dBm, ± 2 dB
		- MCS=6 PER @ -72 dBm, ± 2 dB
		- MCS=7 PER @ -70 dBm, ± 2 dB
	Maximum Input Level	802.11b : -10 dBm
		802.11g/n : -20 dBm
	Antenna Reference	External: I-PEX with 0~2 dBi peak gain
Bluetooth	Certification	
	Bluetooth Standard	Bluetooth V4.1 of 1, 2 and 3 Mbps
	Antenna Reference	External: I-PEX with 0~2 dBi peak gain
	Frequency Band	2402 MHz ~ 2480 MHz

	Number of Channels	79 channels
	Modulation	FHSS, GFSK, DPSK, DQPSK
	Output Power (Output power can be configured by HCD firmware)	10 dBm (Max.)
	Sensitivity @ BER=0.1% for GFSK (1Mbps)	-86 dBm, typical
	Sensitivity @ BER=0.01% for π/4-DQPSK (2Mbps)	-86 dBm, typical
	Sensitivity @ BER=0.01% for 8DPSK (3Mbps)	-80 dBm, typical
	Maximum Input Level	GFSK (1Mbps): -20dBm
		π/4-DQPSK (2Mbps) : -20dBm
		8DPSK (3Mbps) : -20dBm
Hardware	Working Voltage	3.5-5.5V
	Working Current	200 ~ 240mA (STA mode)
	Standby Current	5mA
	Operating Ambient Temperature	0℃ ~ 40℃
	Storage Temperature	-5℃ ~ 45℃
	Wi-Fi Working Distance	2.4G 80 meters
	IO Extension	USB, I2S, I2C, PWM, SPI, UART
	Dimension	NGFF golden fingers 67PIN

Table1-1 A98ML Module Parameters

2. Hardware Description

2.1. Description of Hardware Interface

A98ML provides the option to connect with customer board through its 67-pins NGFF golden finger. The detail is as follows.

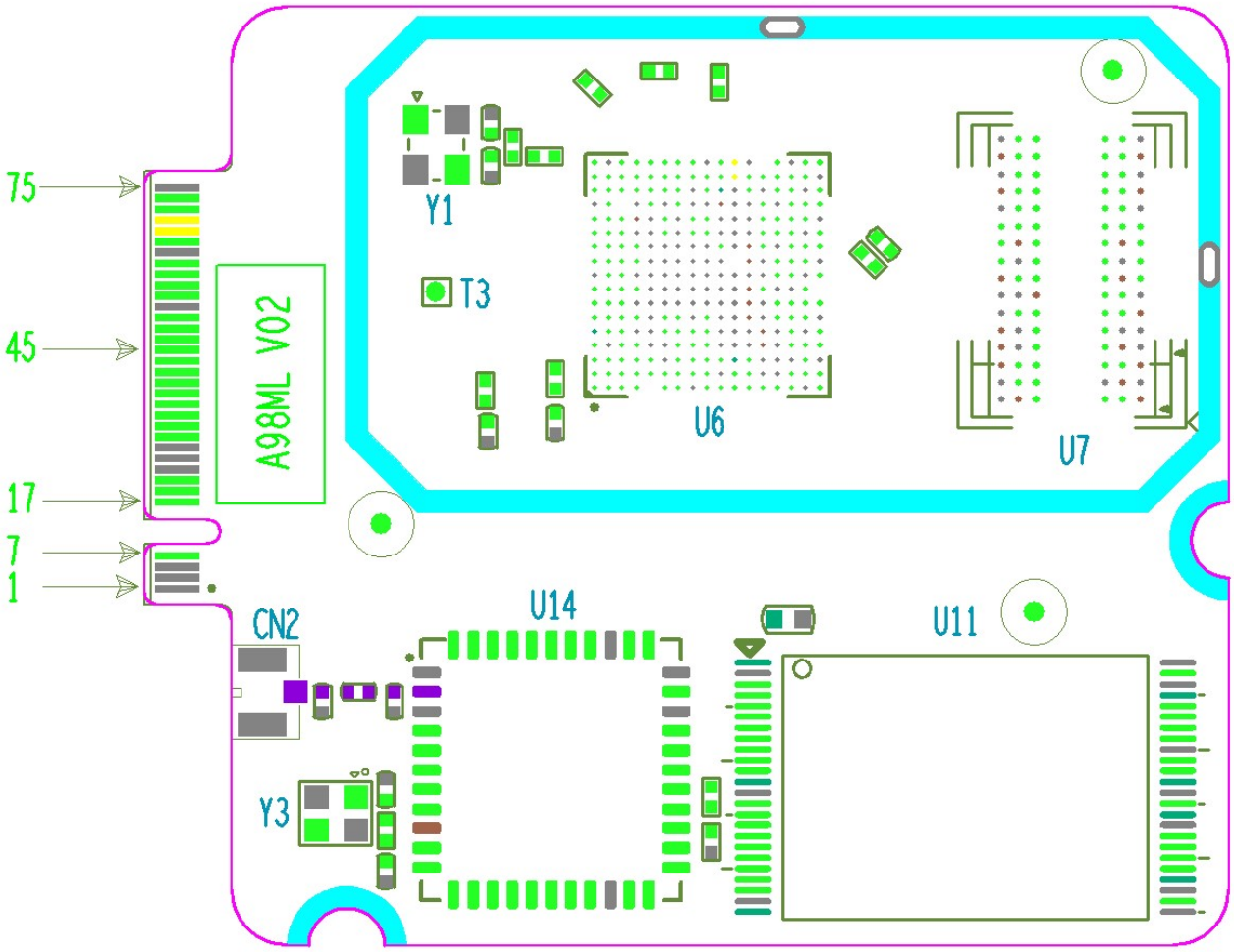
75
45
17
7
1
A98ML V02
Y1
T3
U6
U7
CN2
U14
U11
Y3

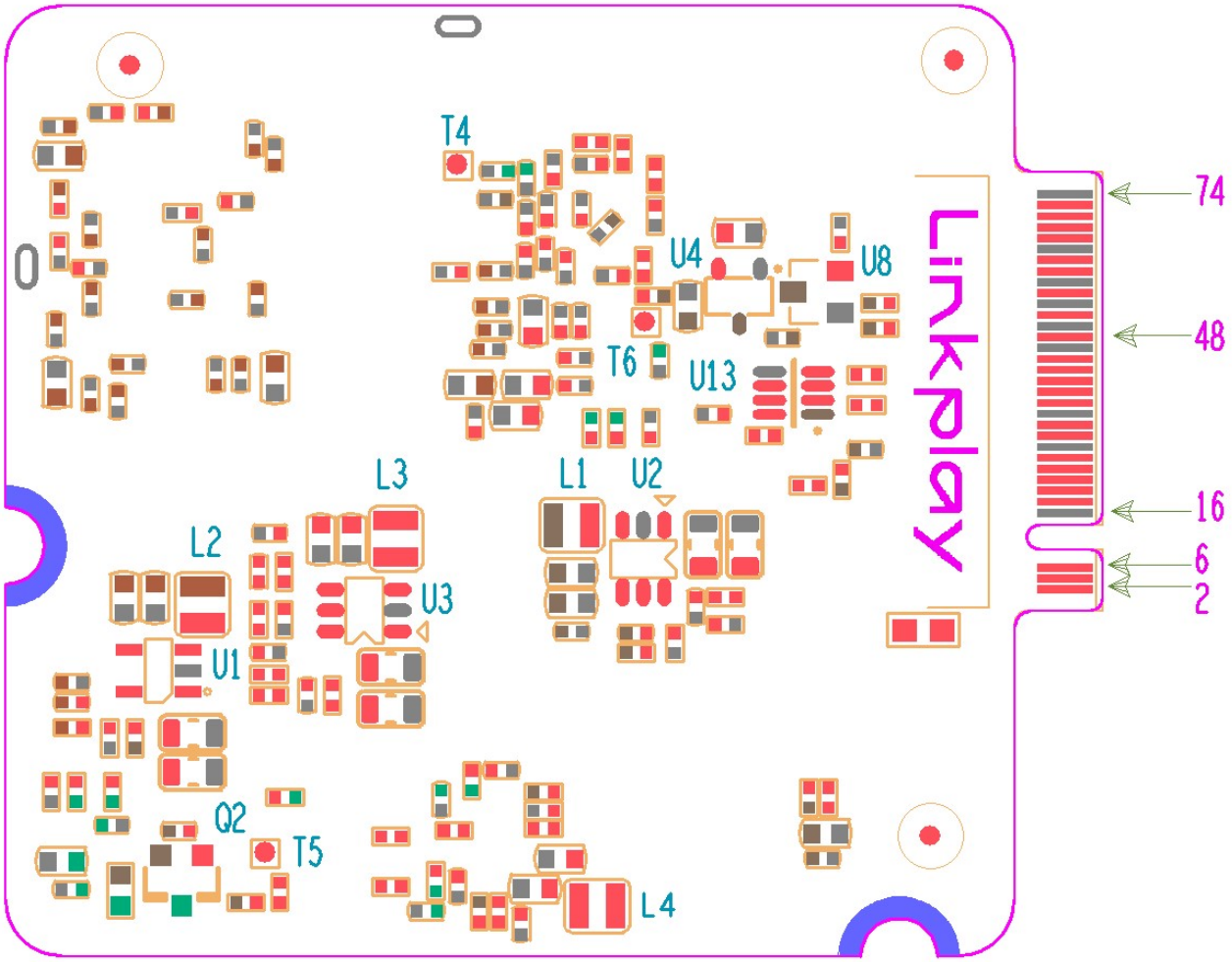

Figure 2-1 A98ML Interface Pins

Pin Description:

Pin No.	Pin Name	Type	Description	Power Domain
1, 3, 5, 16, 23, 25, 27, 28, 34, 46, 50, 53, 54, 58, 63, 64, 74, 75	GND	Supply	Digital ground	GND
2，4，6	VDD_5V	Power	Power supply input > 800mA	3.5 - 5.5V
7	GPIOZ_7	I/O	General purpose input output	3.3V
17	I2C1_SCL	I/O	I2C bus1 clock	3.3V
19	I2C1_SDA	I/O	I2C bus1 data	3.3V
21	GPIOZ_3	I/O	General purpose input output	3.3V

29	GPIOZ_6	I/O	General purpose input output	3.3V
31	PWM_B	O	Pulse Width Modulation B	3.3V
33	PWM_D	O	Pulse Width Modulation C	3.3V
35	PWMAO_C	O	Pulse Width Modulation AO_C	3.3V
37	PWMAO_D	O	Pulse Width Modulation AO_D	3.3V
39	UART0_RXD	I	UART0 receive	3.3V
41	UART0_TXD	O	UART0 transmit	3.3V
43	GPIOAO_7	I/O	General purpose input output	3.3V
45	GPIOAO_6	I/O	General purpose input output	3.3V
47	PWMAO_A	O	Pulse Width Modulation AO_A	3.3V
49	I2C0_SDA	I/O	I2C0 bus data	3.3V
51	I2C0_SCL	I/O	I2C0 bus clock	3.3V
55	GPIOA_19	I/O	General purpose input output	3.3V
57	ADC_CH0	I/IPU	ADC input	1.8V
59	MCLK_C	O	Master clock C	3.3V
61	GPIOAO_13	I/O	General purpose input output	3.3V
65	GPIOA_20	I/O	General purpose input output	3.3V
67	USB_DM	I/O	USB data minus	3.3V
69	USB_DP	I/O	USB data plus	3.3V
71	USB_VBUS	I	USB voltage detection	5V
73	USB_ID	I	USB ID	1.8V
18	GPIOZ_5	I/O	General purpose input output	3.3V
20	GPIOZ_1	I/O	General purpose input output	3.3V
22	GPIOZ_0	I/O	General purpose input output	3.3V
24	PWM_C	I/O	Pulse Width Modulation C	3.3V
26	GPIOZ_2	I/O	General purpose input output	3.3V
30	UART1_RXD	I	UART1 receive	3.3V
32	UART1_TXD	O	UART1 transmit	3.3V
36	PDM_DIN3	I	PDM input data 3 signal	3.3V
38	PDM_DIN1	I	PDM input data 1 signal	3.3V
40	PDM_DIN2	I	PDM input data 2 signal	3.3V
42	PDM_DCLK	O	PDM output clock	3.3V
44	PDM_DIN0	I	PDM input data 0 signal	3.3V
48	TDMB_DIO1	I/O	TDM B input and output data1	3.3V
52	TDMB_SCLK	I/O	TDM B bit clock	3.3V
56	TDMB_DIO0	I/O	TDM B input and output data0	3.3V
60	TDMB_FS	I/O	TDM B L/R clock	3.3V
62	TDMC_DIO1	I/O	TDM C input and output data1	3.3V
66	TDMC_DIO0	I/O	TDM C input and output data0	3.3V
68	TDMC_FS	I/O	TDM C L/R clock	3.3V
70	TDMC_SCLK	I/O	TDM C bit clock	3.3V

72	MCLK_B	O	Master clock B	3.3V

Table 2-1 A98ML Module Pin Description

Notes:

1. I：Input
2. O：Output
3. P：Power
4. IPU：Internal Pull Up
5. IPD：Internal Pull Down

2.2. Mechanical Dimension

A98ML module has the dimension of 50mm x 40.33mm. The detailed layout will be given shortly below.

Unit: mm

PLUG PCB dimensions:

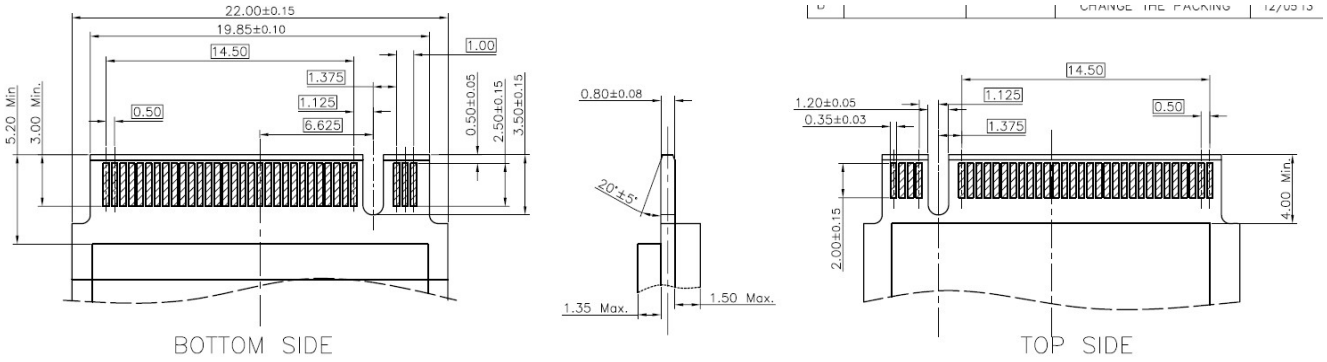

NGFF connector dimensions:

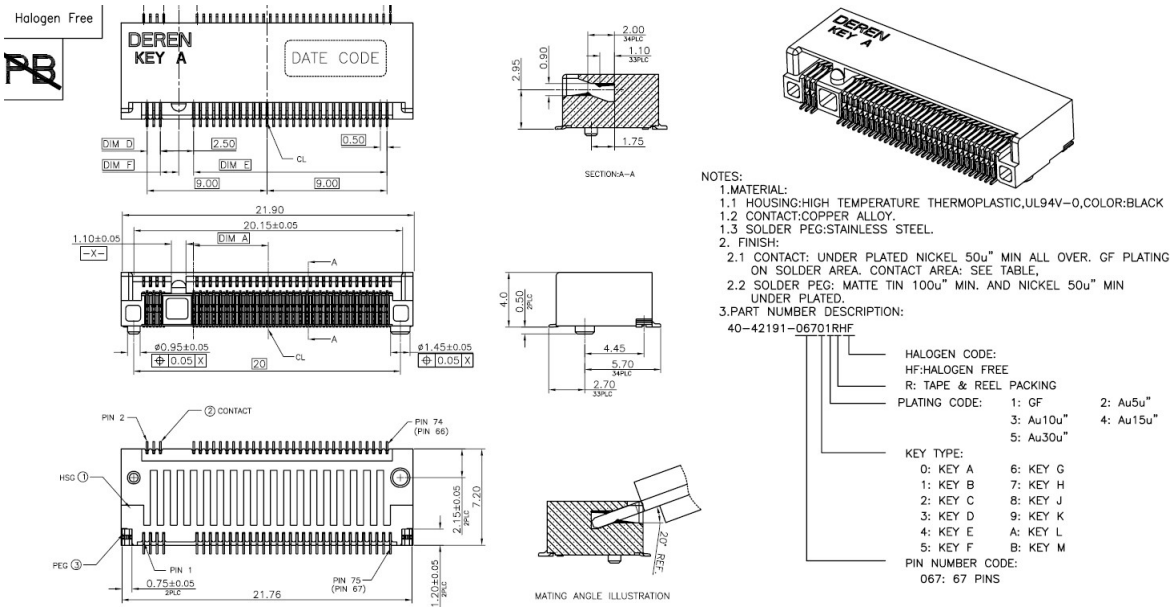

Top View

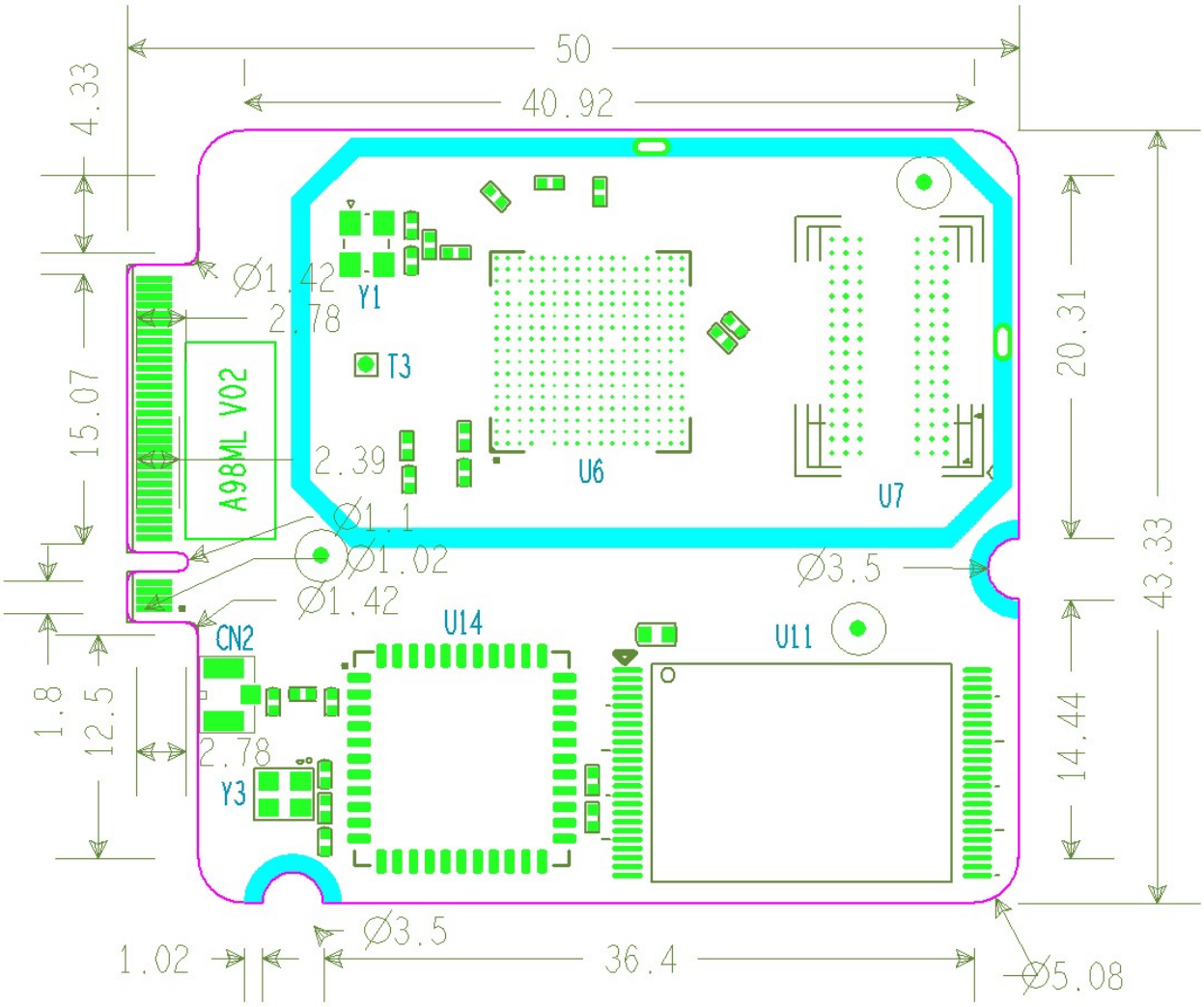

TOP Components Height Limit

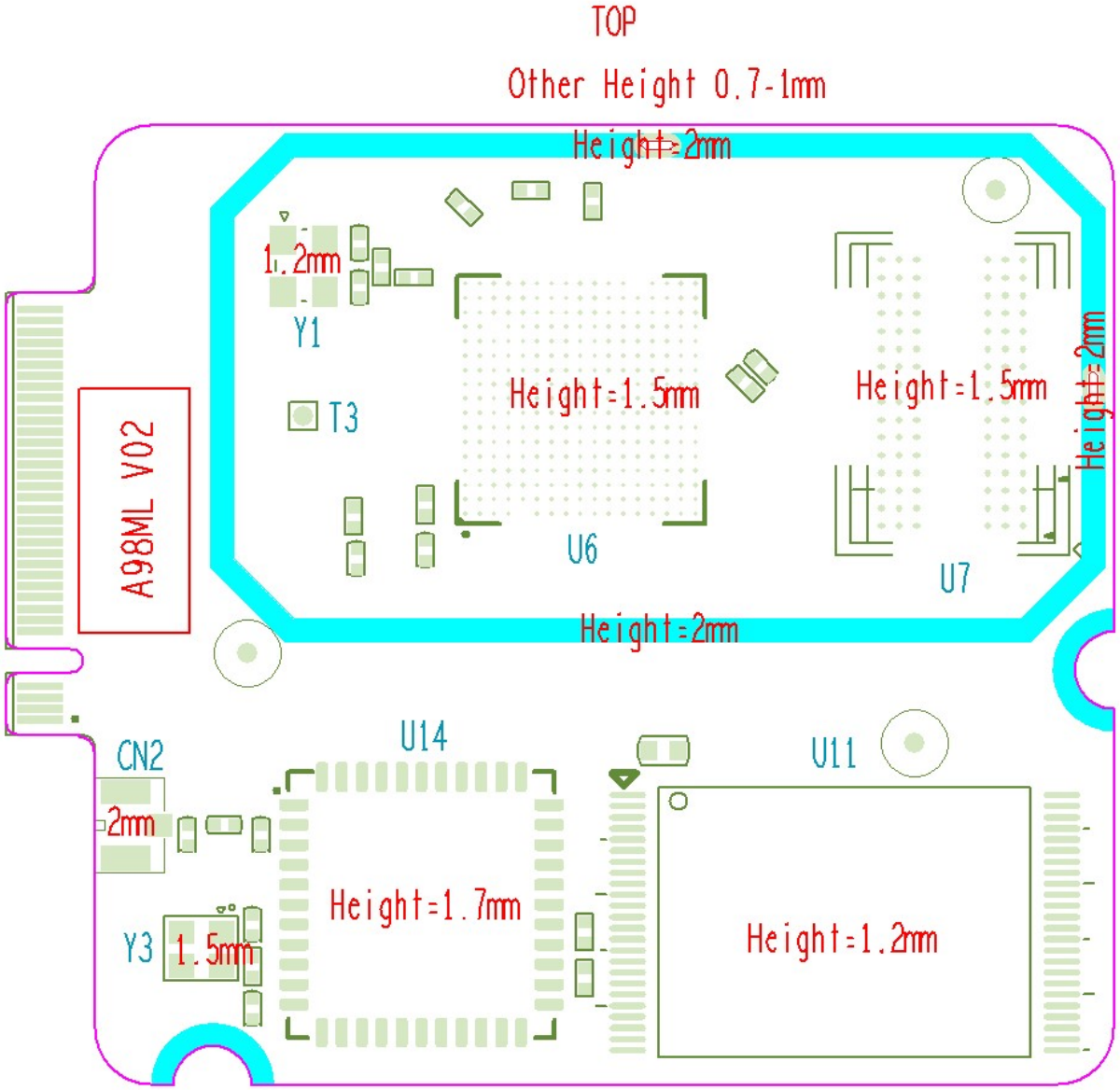

Bottom Components Height Limit

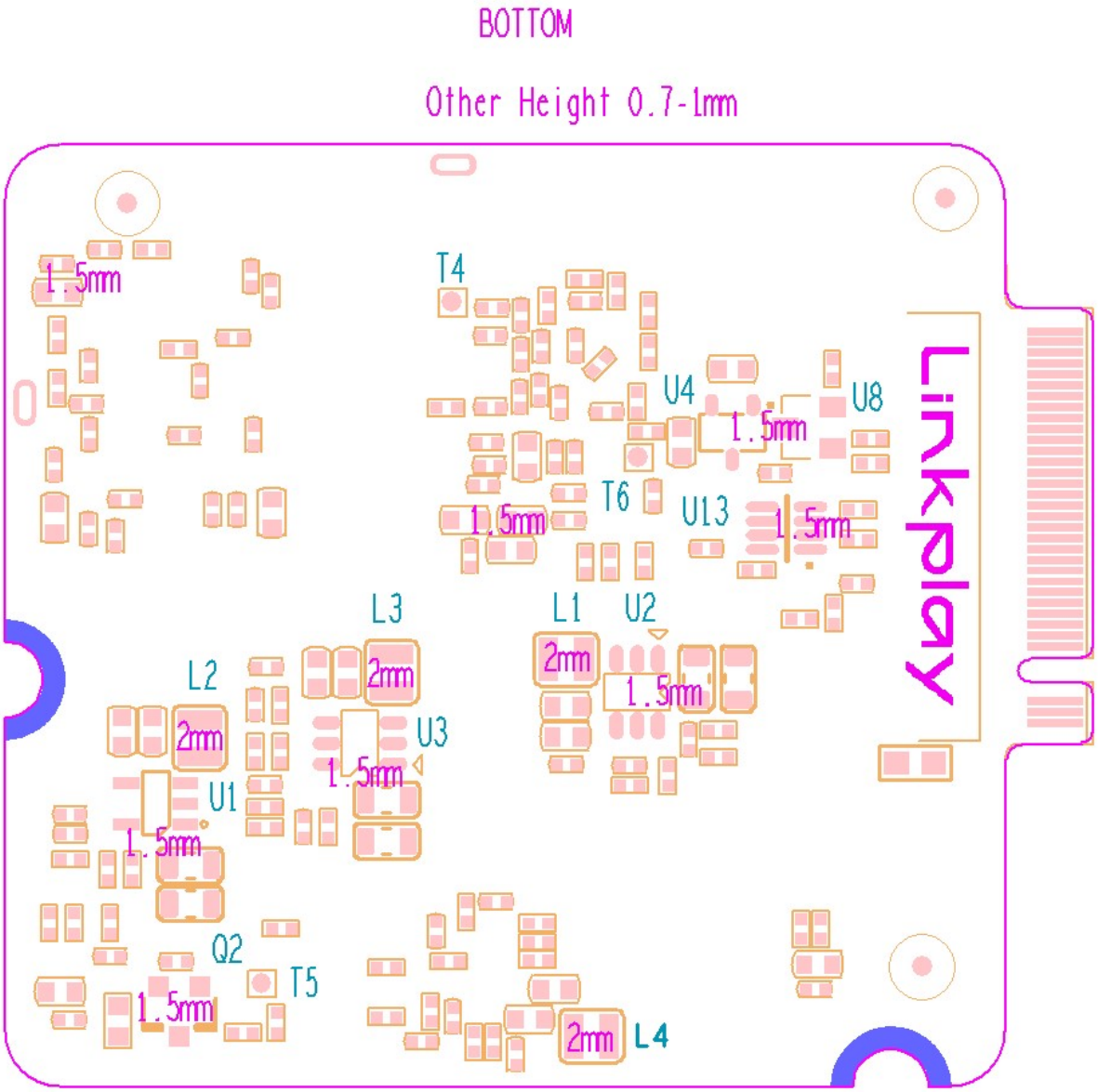

Figure 2-2 A98ML Physical Dimension

2.3. External Antenna

A98ML uses the external antenna for the best Wi-Fi performance. To use external antenna, please choose the antenna type that meets the requirement of IEEE 802 b/g/n Wi-Fi standard running at 2.4GHz frequency. The detailed parameters are shown in the table below.

Item	Parameter
Frequency range	2.4 ~ 2.5GHz
Impedance	50 Ohm
VSWR	2 (Max.)
Reflection loss	-10dB (Max.)

Connector	I-PEX or populate directly

Table 2-5 External Antenna Parameters for A98ML

2.4. ower on Sequence

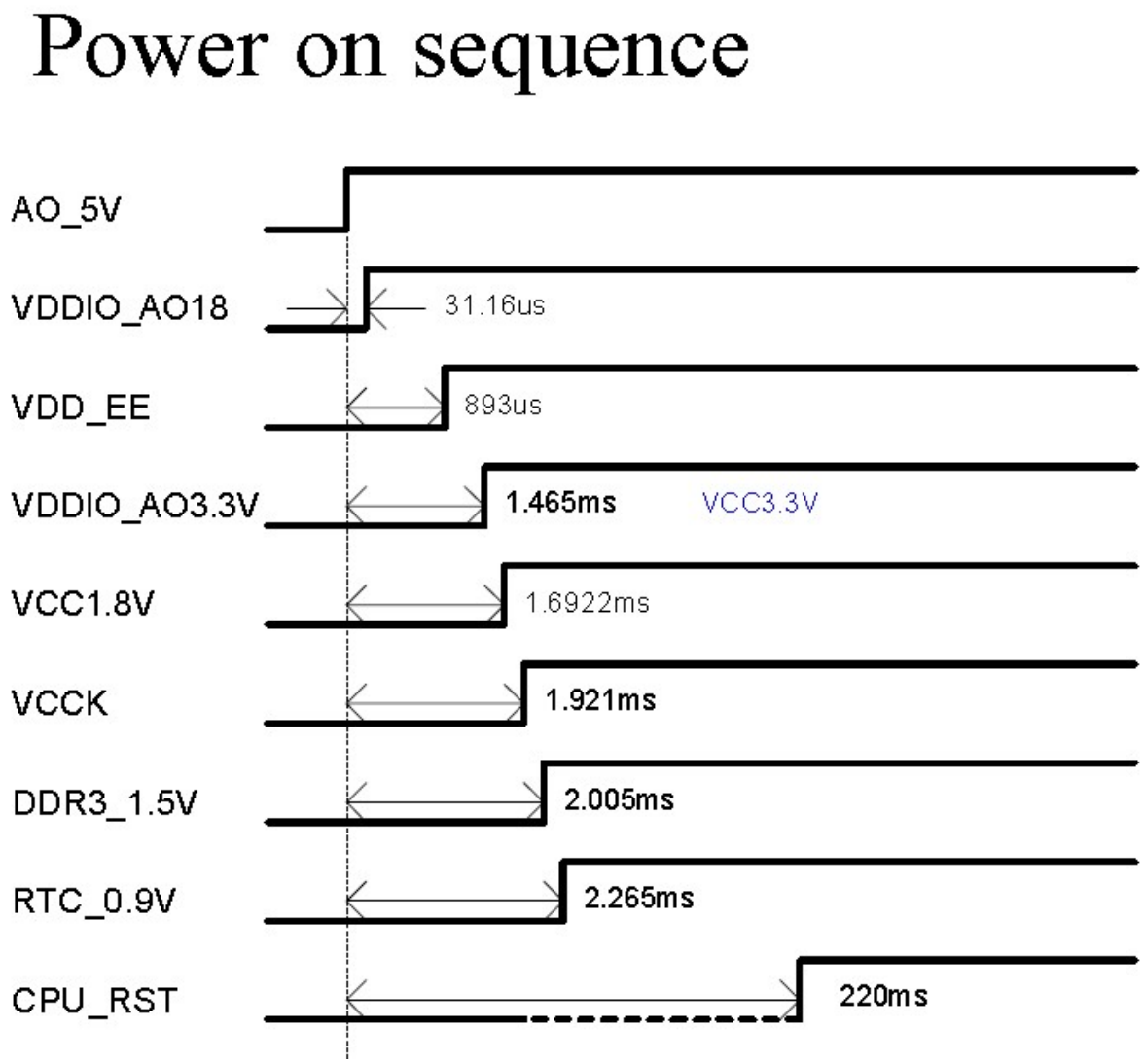

2.6 USB OTG Port

Please follow the design rule below to populate the USB host interface:

Item	Parameter
Signal Group	USB
Topology	Differential Pair Point-to-Point
Reference Plane	Ground Referenced
Characteristic Trace Impedance (Zo)	90 Ω ±10%

Trace Width	4 mils
Serpentine Spacing (center to center)	8.5 mils
Minimum Isolation Spacing to Clock Signals	50 mils
Minimum Isolation Spacing to Low-Speed Signals	20 mils
Minimum Isolation Spacing to other USB Pair	20 mils
Total Length (with package length)	< 8000 mils
Maximum Recommended Via Count	2 (per side)
DM to DP Length Matching (with package length)	Match total length to within ±10 mils

Table 2-2 A98ML USB Design Rule

3. Software Introduction

3.1. Feature List

- "Easy Setup" to setup your network, with the help of one button of your device, you can connect the device to your home router quickly.
- Music stream protocol
  Support Spotify Connect, Airplay, DLNA and QPlay protocol
- Amazon Alexa
- Music content
  Support iHeartRadio, Napster/Rhapsody, Tidal, Deezer, vTune, Qobuz, Audible, Radio.de, NPR，Ximalaya，Qingting FM, QQ FM, Douban FM inside, with the help of App, you can search, stream, playback and preset the musics of the above music services.
- Multiroom
  Support multiroom.
  Support Airplay, Spotify, Bluetooth, Aux-in multiroom playback.
- Music format
  HTTP/HTTPS/RTSP/MMS/TS protocol
  HLS/ASX/M3U playlist format
  MP3/AAC/FLAC/ALAC/WMA/APE/OGG codec
- BT
  Support 4.1：A2DP, AVRCP, HFP, HID profiles
  Support BLE
  Support EDR
- Preset
  With the help of App, you can store the music account token and playlist in the A98ML. Then the end user can play the playlist by the button/voice or timer even without the App.

3.2. APP Support

- iOS App
  ≥ iOS6.1， suggest iOS10 and above
- Android APP
  ≥ Android 4.3.3
- Quick Customization
  With the help of the Linkplay compile server, you can change the brand and some strings, change the logo and some pictures to get a customization App.

3.3. Certifications

Linkplay can help you to finish follow certifications:

- Wi-Fi Logo
- BQB
- Amazon Alexa
- MFi
- Spotify Connect
- DLNA
- QPlay

4. Module Environmental and Package

4.1. Environmental Ratings

The environmental ratings are shown as following table.

Characteristic	Value	Units	Conditions/CommentsA
Storage Temperature	-5 ~ 45	℃	
Relative humidity	Less than 60	%	Storage
	Less than 80	%	Operation

4.2. Electrostatic Discharge Specifications

Extreme caution must be exercised to prevent electrostatic discharge (ESD) damage. Proper use of wrist and heel grounding straps to discharge static electricity is required when handling these devices. Always store unused material in its antistatic packaging.

ESD Specifications

Type	Symbol	Condition	ESD Rating	Unit

ESD Handling	ESD_HAND_HBM	Human Body Model Contact Discharge per JEDEC EID/JESD22-A114	1000	V
Machine Model (MM)	ESD_HAND_MM	Machine Model Contact	30	V
CDM	ESD_HAND_CDM	Charged Device Model Contact Discharge per JEDEC EIA/JESD22-C101	300	V

Single Module

FCC Statement

This device complies with part 15 of the FCC Rules. Operation is subject to the following two conditions:

(1) This device may not cause harmful interference, and

(2) this device must accept

any interference received, including interference that may cause undesired operation.

Any Changes or modifications not expressly approved by the party responsible for compliance could void the user's authority to operate the equipment.

The modular can be installed or integrated in mobile or fix devices only. This modular cannot be installed in any portable device.

FCC Radiation Exposure Statement

This modular complies with FCC RF radiation exposure limits set forth for an uncontrolled environment. This transmitter must not be co-located or operating in conjunction with any other antenna or transmitter. This modular must be installed and operated with a minimum distance of 20 cm between the radiator and user body.

If the FCC identification number is not visible when the module is installed inside another device,then the outside of the device into which the module is installed must also display a labelreferring to the enclosed module. This exterior label can use wording such as the following:“Contains Transmitter Module FCC ID: 2ANOG-A98XLXX Or Contains FCC ID: 2ANOG-A98XLXX”

When the module is installed inside another device, the user manual of the host must contain below warning statements;

1. This device complies with Part 15 of the FCC Rules. Operation is subject to the following two conditions:

(1) This device may not cause harmful interference.

(2) This device must accept any interference received, including interference that may cause undesired operation.

2. Changes or modifications not expressly approved by the party responsible for complianc could void the user's authority to operate the equipment.

The devices must be installed and used in strict accordance with the manufacturer's instructions as described in the user documentation that comes with the product.

Any company of the host device which install this modular with Single modular approval should perform the test of radiated emissionand spurious emission according to FCC part 15C : 15.247 requirement,Only if the test result comply with FCC part 15C : 15.247 requirement， then the host can be sold legally.The module complies with FCC Part 15.247

Trace antenna designs: Not applicable.

Antenna type	Antenna gain
PIFA	1.6dBi