EGGTRONIC

Triple coil embedded wireless charging system

FEATURES
• Compatible with WPC Qi 1.2 wireless charging standard
• Designed for integration: a completely hidden solution
• Industrial adhesive mounting tape, no need for screws
• Quick and practical installation process, easy charger removal without damaging the top
• Maximum power 5W
• Triple coil free positioning technology allows wider charging area compared to standard solutions
• Designed to be installed under surfaces with maximum thickness of 5 mm (0.19 in)

HOW TO USE

1. Remove the layer on the adhesive mounting tape

2. Apply under surface. Works with most non-metal surfaces

3. Connect the cable to the power source

4. Lay down any Qi-enabled smartphone on the wireless charging area to start charging

GENERAL DESCRIPTION

The "Triple coil embedded wireless charging system" is a wireless charging module designed to be integrated in any surface.
Using the provided adhesive mounting tape, it can be installed under slim surfaces (maximum 5 mm thickness). No need for screws: the installation process is quick and easy, and the charger can be removed without damaging the top. The "Triple coil embedded wireless charging system" embeds a Qi-compliant chipset: it is compatible with the WPC Qi 1.2 wireless charging standard, and works with any Qi-compliant device. A triple-coil system ensures high positioning freedom.

Copyright Eggtronic, All rights reserved

SPECIFICATIONS

Physical Specifications	
Dimensions	60 x 103 x 8.5 mm (2.36 x 4.05 x 0.39 in)
Weight	85 g (0.19 lbs)
Cable length	45 cm (1.5 ft)

Electrical Specifications	
Input	Min 11.4V Max 12.6V
Input current	Max 1A
Output	wireless 5W
Standby mode consumption	~ 25 mA
Storage temperature	-10°C / 70°C
Operating temperature	0°C / 40°C
Operating frequency	115 - 205 kHz

PIN OUTPUT

MOLEX 430250200

PIN	Signal
1	12V
2	GND

Copyright Eggtronic, All rights reserved

TECHNICAL DRAWINGS

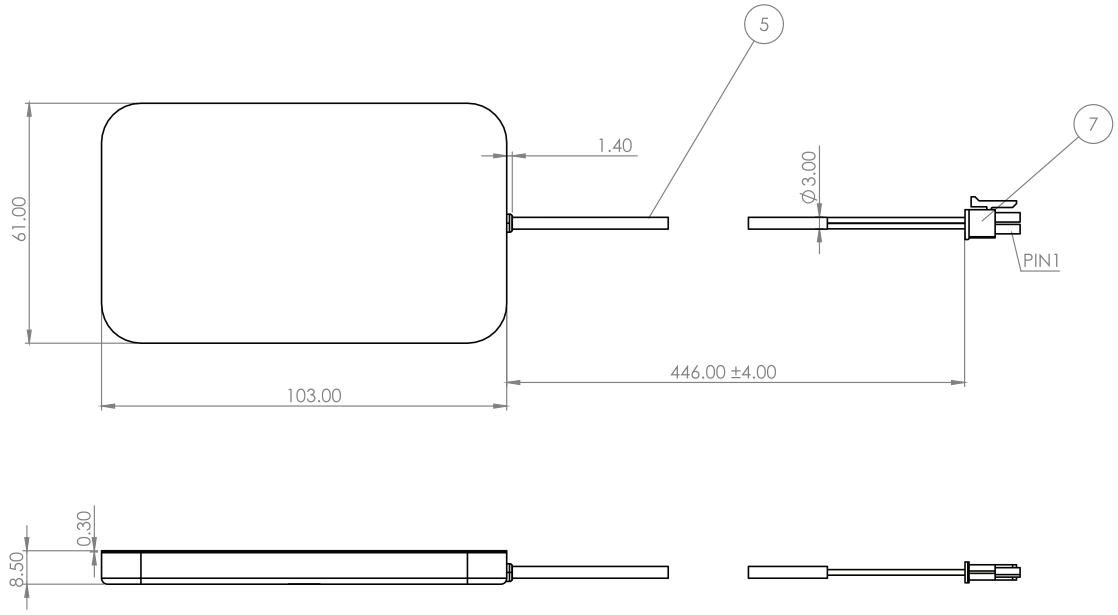

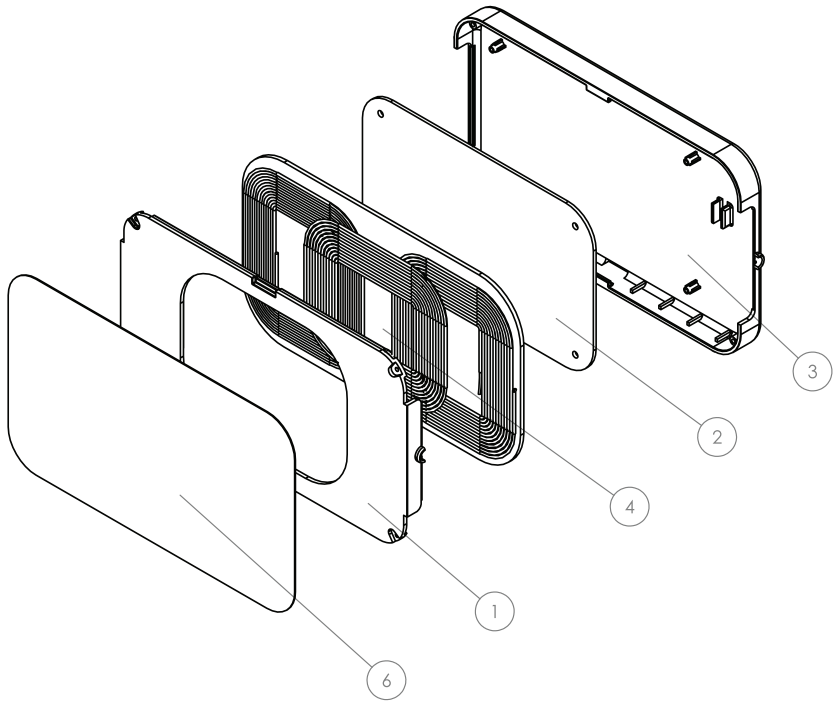

Item Number	Part Number	Description	/Material	Quantity
1	EGG170016_M02V12R021-SHELL BOTTOM	Upper Cover	ABS	1
2	EGG170016_EGGTX017_S01G01B02	PCB Assembly	FR4	1
3	EGG170016_M01V12R021-SHELL TOP	Bottom Cover	ABS	1
4	EGG170016 - E01 - TripleCoil	Wirelessc charging coil A6	Copper wire + ferrite	1
5	EGG170016_M05V12R021_CABLE	Cable	Copper wire	1
6	EGG170016_M03V12R021_ADHESIVE	Adhesive tape - OCS5030GP	White ash Acrylic	1
7	EGG170016_M05V12R021_CONNECTOR	MOLEX 430250200. Polarization: PIN1: 12V - Red PIN2: GND - Black	Nylon	1

General tolererance	
Nominal lengths [mm]table	
0.5 up to 3	±0.1
3 up to 6	±0.1
6 up to 30	±0.2
30 up to 120	±0.3
External Radius and Chamfer Height	
0.5 up to 3	±0.2
3 up to 6	±0.5
Angular dimension	
up to 10	±1°
over 10 up to 50	±0°30'
over 50 up to 120	±0°20'

Copyright Eggtronic, All rights reserved

APPENDIX A – CLIMATIC TEST

1. CEI EN 60068-2-1: Cold

Test description

The sample stored at ambient temperature, is introduced into the climate chamber, whose temperature is the same of ambient temperature (storing temperature: 25°C). Then the temperature lowers at -10°C and the sample is maintained at this temperature for 16h. Humidity must be 0%.

Restoring the ambient temperature

The sample must be maintained at ambient temperature to allow defrosting (at least 1 hour)

Final measure

The sample must be inspected (visual and functional) and strength test must be executed.

Test passed	yes

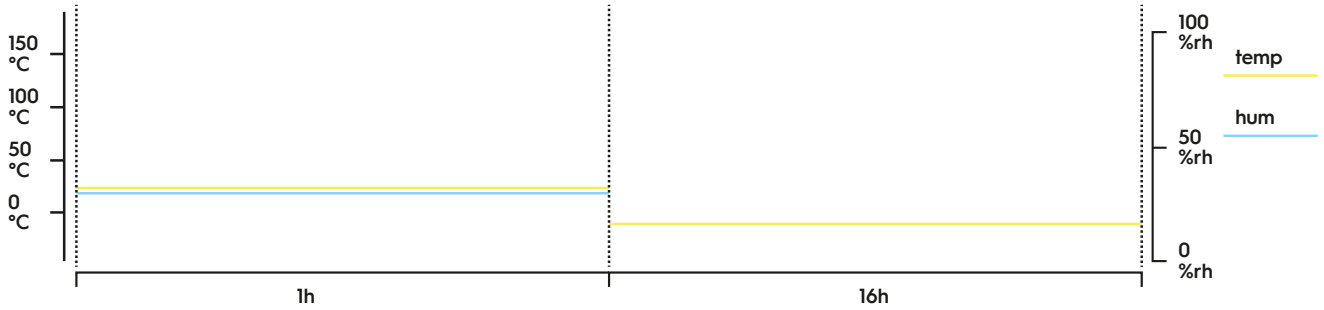

2. CEI EN 60068-2-2: Dry heat

Test description

The sample stored at ambient temperature, is introduced into the climate chamber, whose temperature is the same of ambient temperature (storing temperature: 25°C). Then the temperature increases at 70°C and the sample is maintained at this temperature for 16h. Humidity must be 0%.

Restoring the ambient temperature

The sample must be maintained at ambient temperature to allow restoring thermal stability (at least 1 hour).

Final measure

The sample must be inspected (visual and functional) and strength test must be executed.

Test passed	yes

Copyright Eggtronic, All rights reserved

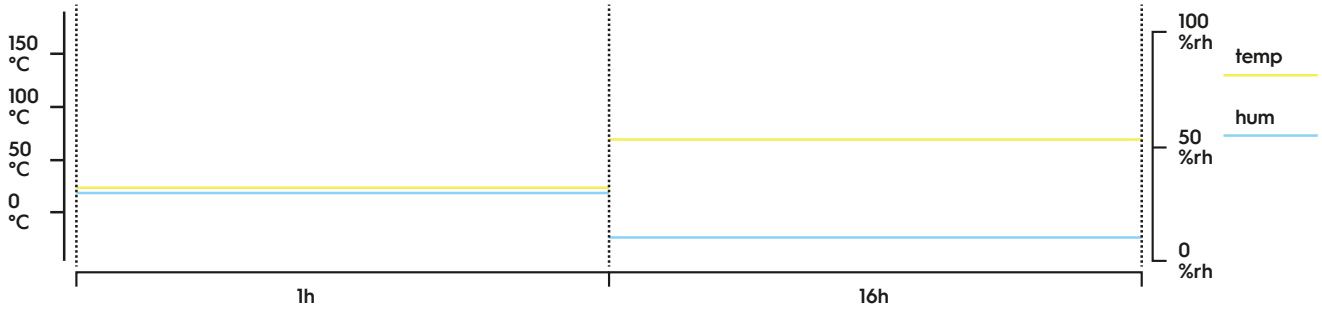

3. CEI EN 60068-2-14: Temperature change

Test description

The sample stored at ambient temperature, is introduced into the climate chamber, whose temperature is the same of ambient temperature (storing temperature: 25°C). Then the temperature decreases at -10°C (with a variation velocity of 3±0.6°C/min) and the sample is maintained at this temperature for 3h. Afterwards the temperature increases at 70°C (with a variation velocity of 3±0.6°C/min) and the sample is maintained at this temperature for 3h. Hence bring back the temperature at 25°C, 10%rh (with a variation velocity of 3±0.6°C/min).
This test must be executed two times without interruption (then 2 cycles) for a total execution time of 827min.

Restoring the ambient temperature

The sample must be maintained at ambient temperature to allow restoring thermal stability (at least 1 hour).

Final measure

The sample must be inspected (visual and functional) and strength test must be executed.

Test passed	YES with note[1]

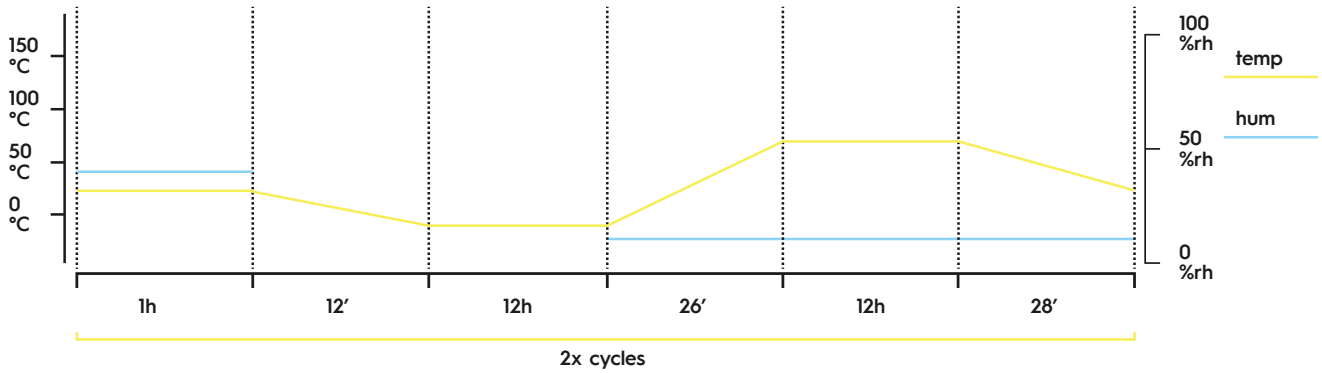

Note[1]: Climate chamber ESPEC SH-642 can't follow the indication of 3±0.6°C/min for the first step, then the test was been executed at 1.4°C/min (Step_1_time = 25').

Copyright Eggtronic, All rights reserved

4. CEI EN 60068-2-30: Wet heat, cyclic (12h+12h)

Test description

The sample stored at ambient temperature, is introduced into the climate chamber, whose temperature is the same of ambient temperature (storing temperature: 25°C). Then the temperature increases at 55°C (in a period not less than 3h) and the sample is maintained at this temperature for 11h45' at 93%rh and then for 15' at 95%rh. Afterwards the temperature decreases at 25°C (in a period between 3h and 6h). In the first 1h 30' the decrease velocity must be sufficient to complete the temperature variation in 3h and after this the sample must be maintained at this temperature (25°C) until 24h from the start of the test.

Restoring the ambient temperature

The sample must be maintained at ambient temperature to allow restoring thermal stability (at least 1 hour).

Final measure

The sample must be inspected (visual and functional) and strength test must be executed.

Test passed	yes

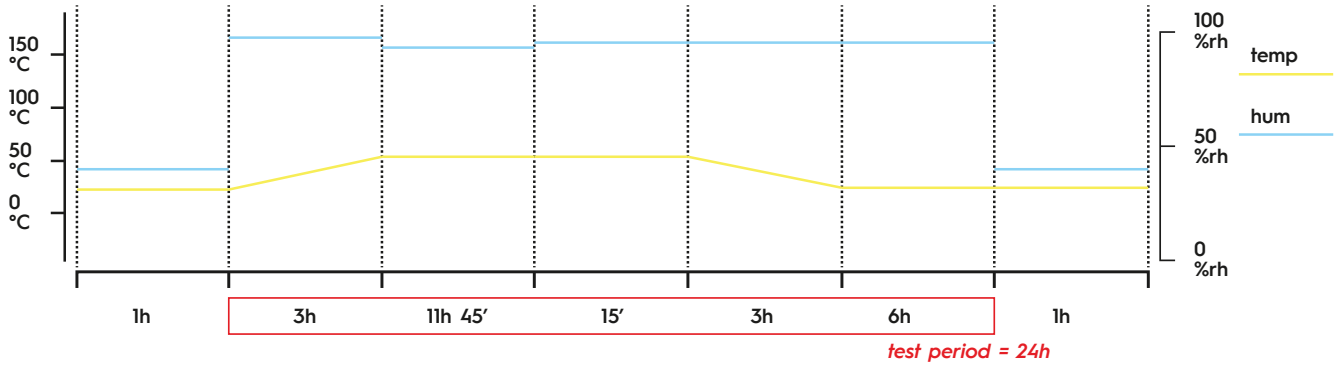

APPENDIX B – CURRENT CONSUMPTION

The below screenshots are sampling for current consumption in different operating points:
- Stand by current with ping
- Charging light load (only RX energized)
- Charging 5W load

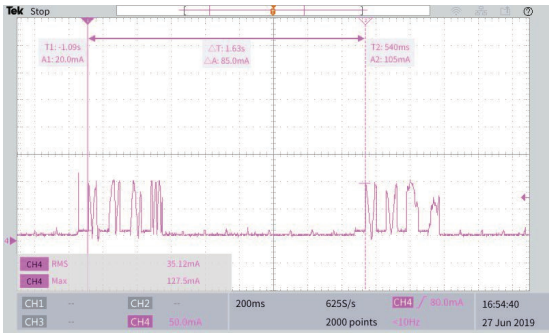

1. WCP ping routine

Copyright Eggtronic, All rights reserved

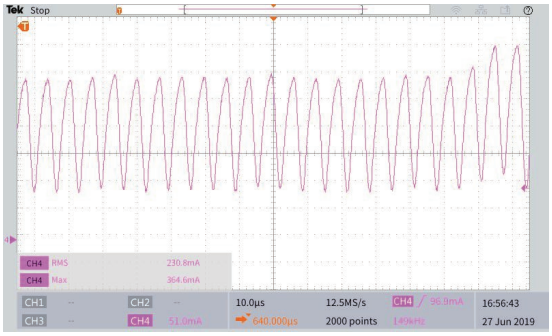

3. Light load charging

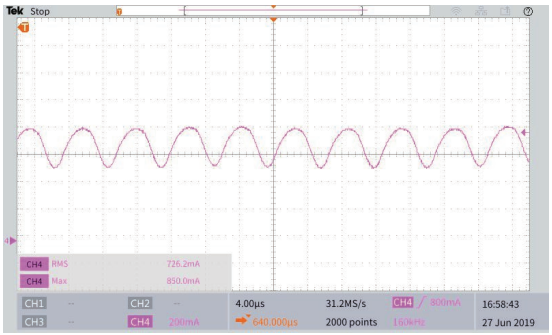

3. 5W charging

FCC Warning

This device complies with part 18 of the FCC Rules. Operation is subject to the following two conditions:

(1) This device may not cause harmful interference, and (2) this device must accept any interference received, including interference that may cause undesired operation.

NOTE: Any changes or modifications to this unit not expressly approved by the party responsible for compliance could void the user's authority to operate the equipment.

Copyright Eggtronic, All rights reserved