RENOGY

REGO

Lithium Iron Phosphate Battery

12V | 400Ah

VERSION A1

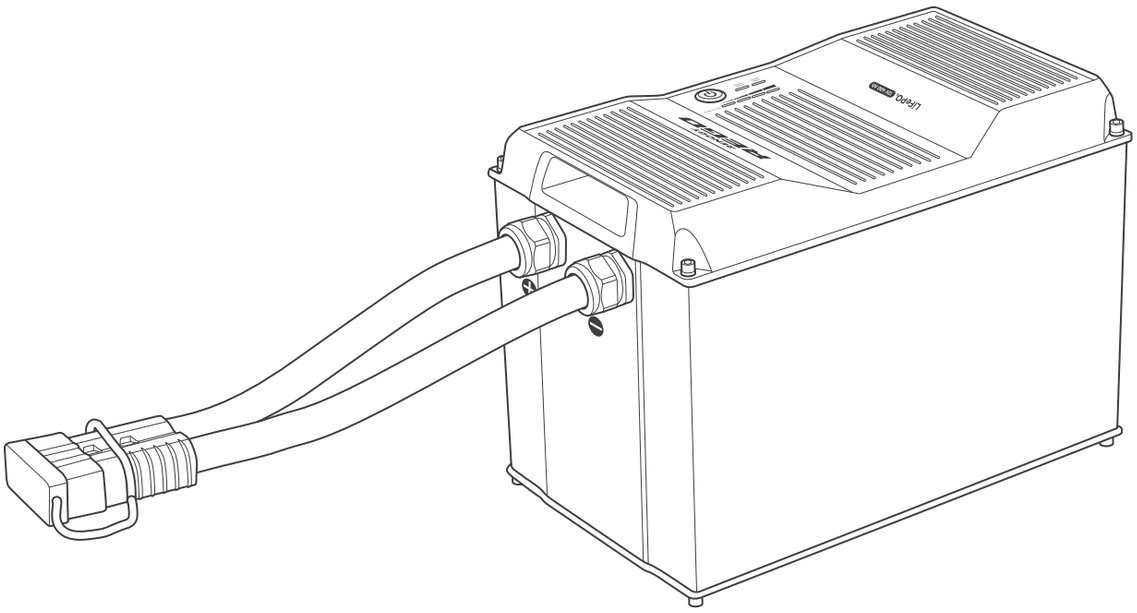

QUICK GUIDE

Contents

Package Contents 01
Wiring Diagram.....02
Product Overview 03
Power Connection 04
Communication.....07
Turning On.....10
LED Indicators 11
Heater Settings.....14
Turning Off.....16
Maintenance 17

Package Contents

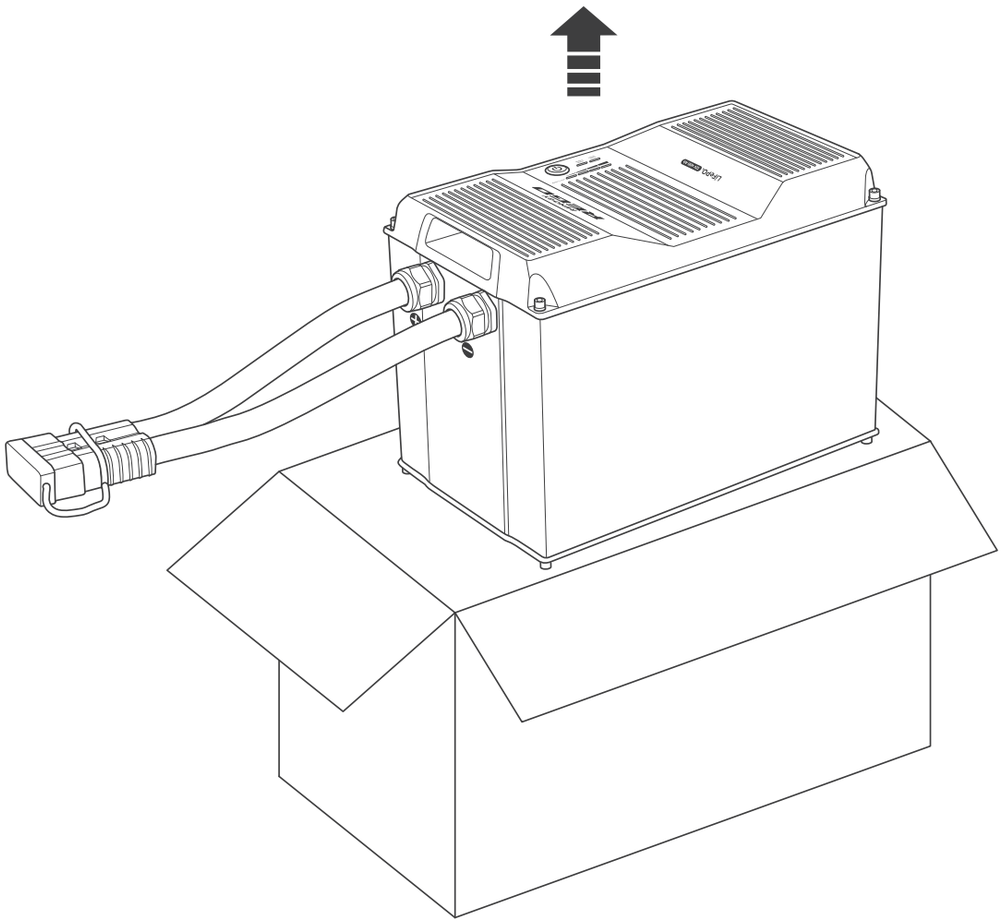

Quick Guide × 1

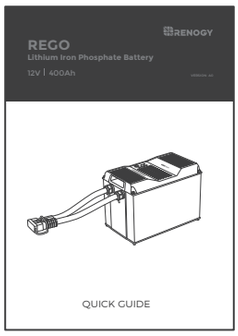

Wiring Diagram

Using Battery Combiner Box and System Combiner Box

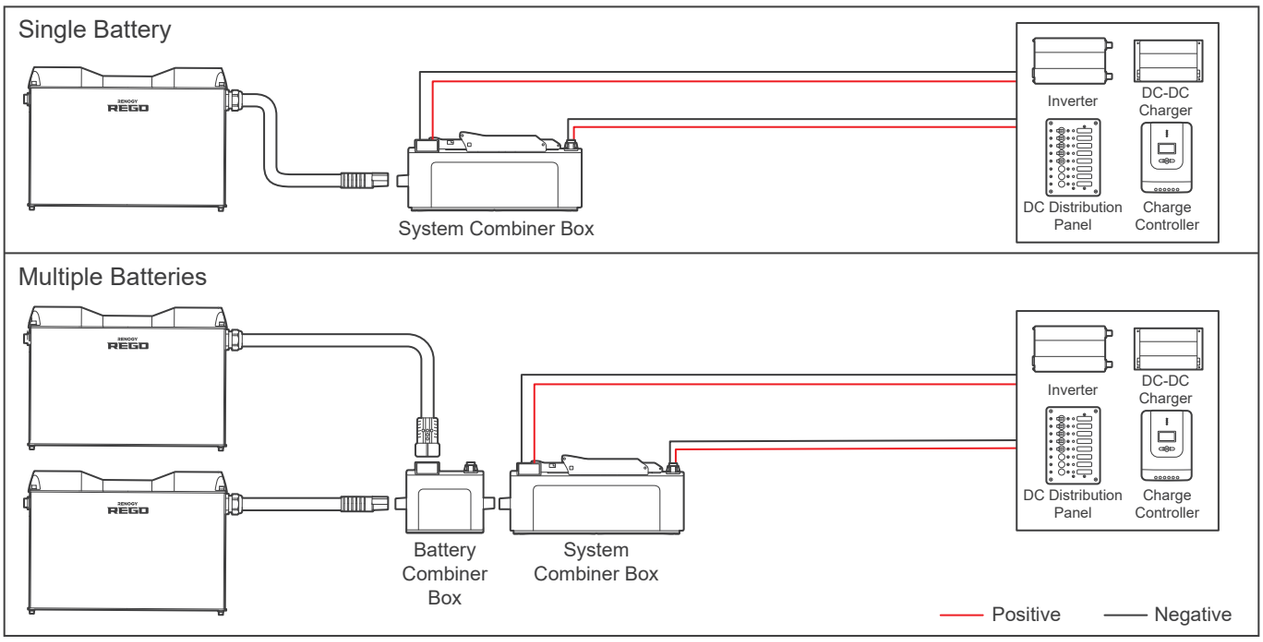

Using Anderson Connector to Ring Terminal Adapter Cables

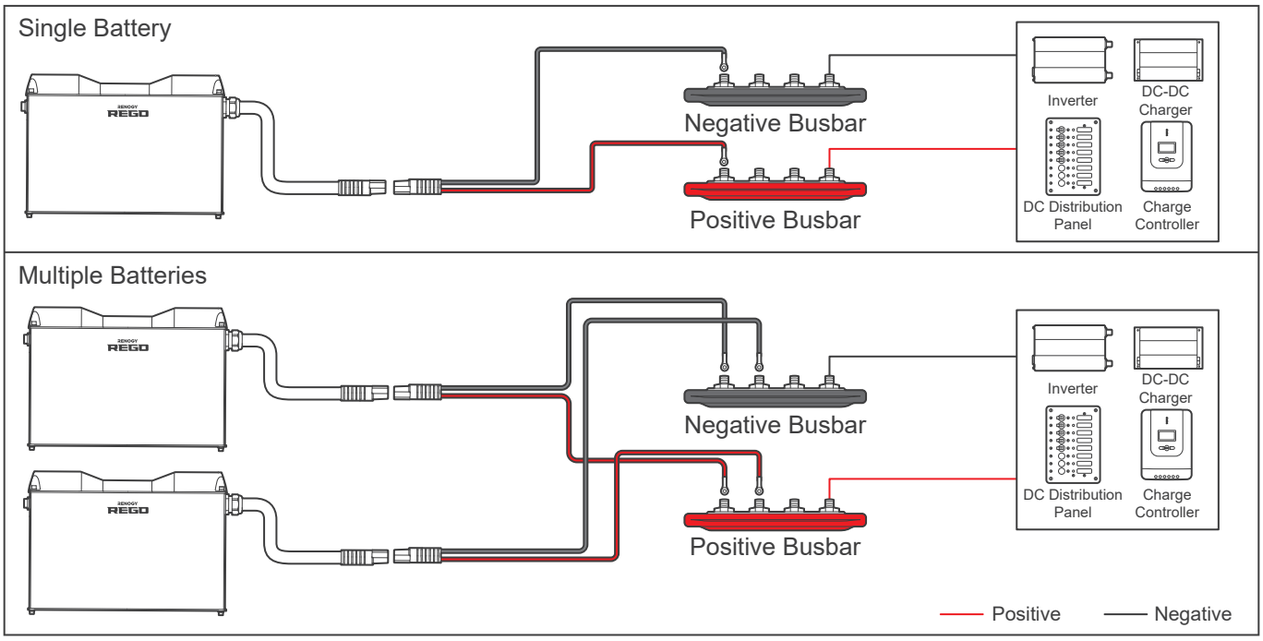

- This Quick Guide contains important installation, operation, and maintenance instructions for the REGO 12V 400Ah Lithium Iron Phosphate Battery. Please read the Quick Guide carefully before using.
- Illustrations in the Quick Guide are for reference only.
- For more detailed instructions, please refer to the user manual at renogy.com.
- For additional support, please contact our customer service through renogy.com/contact-us/.

Product Overview

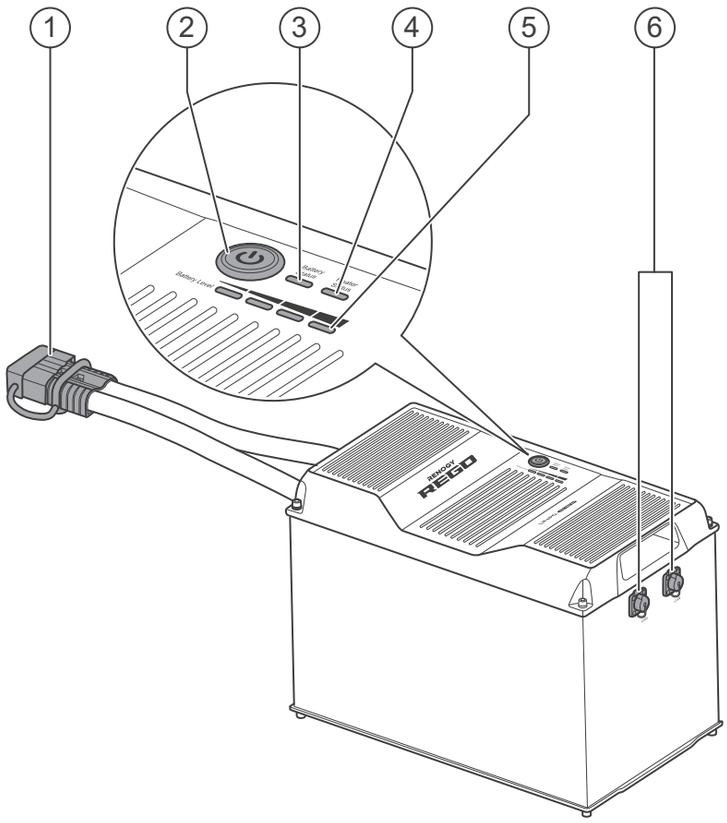

No.	Part	No.	Part
1	Gray Anderson 350 Connector (with Dust Cover)	4	Heater Status Indicator
2	Power Button	5	Battery Level Indicator
3	Battery Status Indicator	6	CAN Communication Ports

- Please inspect the battery for any visible damage including cracks, dents, deformation, and other visible abnormalities before installation.
- DO NOT puncture, drop, crush, burn, penetrate, shake, or strike the battery.
- DO NOT touch the exposed electrolyte or powder if the battery is damaged.
- DO NOT open, dismantle, or modify the battery.
- Please wear proper protective equipment and use insulated tools during installation.
- Please ensure adequate and secure mounting of the battery.
- Please install the battery in a clean, cool, and dry place. Keep water, oil, and dirt away from the battery.

Power Connection

- Please ensure that the Anderson Connectors are fully seated and/or the ring terminals are secured to the proper specification.
- The Anderson Connectors are color coded. DO NOT mate the Anderson Connectors with different colors together.
- DO NOT short the contacts of the Anderson Connector. Short circuits can damage the battery.
- Please check the polarity before connecting the cables. Reverse polarity can damage the battery and connected devices.
- Please size the cables appropriately to handle the expected current. Refer to the user manuals of the battery and connected devices for more details.
- DO NOT connect batteries in series. Series connection can damage batteries.
- DO NOT mix battery brands, models, chemistries, nominal voltages, and rated capacities.
- DO NOT connect more than 8 batteries in parallel.

Using Battery Combiner Box and System Combiner Box

Connecting batteries to the system using the Battery Combiner Box and the System Combiner Box significantly reduces the risk of short circuit, misconnection, or connection failure and allow for quick connection or disconnection.

Recommended Accessories

REGO 3 Ports 400A Battery Combiner Box	REGO 4 Ports 400A System Combiner Box
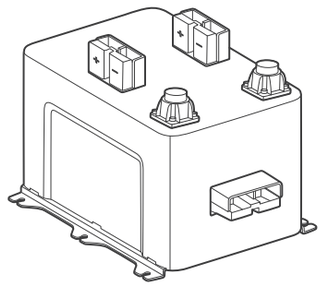	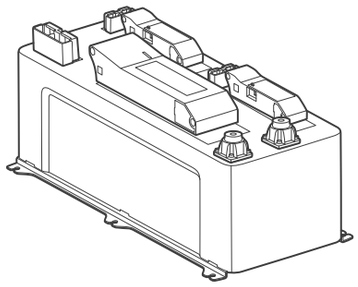

- Please read the user manual of REGO 3 Ports 400A Battery Combiner Box and REGO 4 Ports 400A System Combiner Box at renogy.com before the connection.

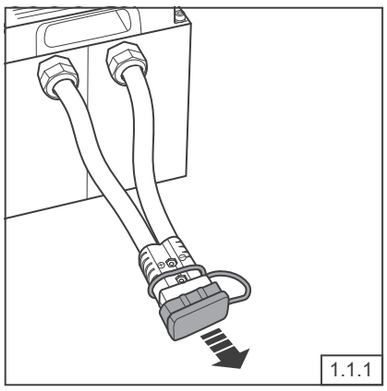

Remove the Dust Covers from the Anderson Connectors.

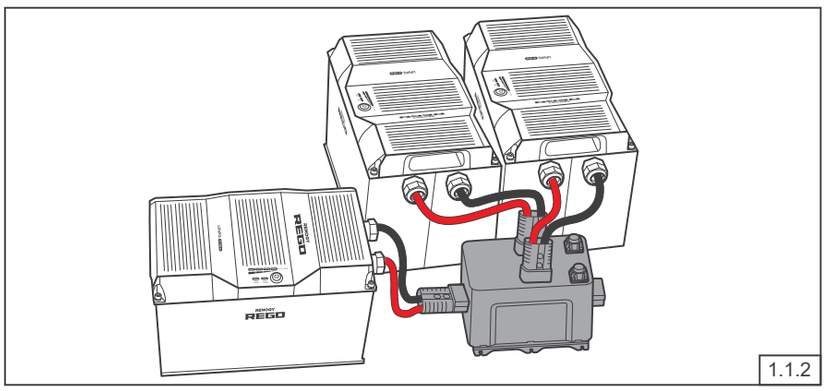

Plug the Anderson Connectors of the batteries to the Battery Combiner Box (sold separately) for parallel connection.

Power Connection

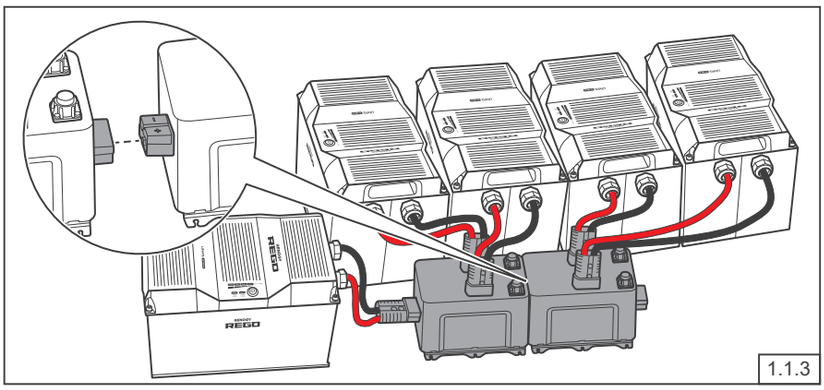

1.1.3

If necessary, connect multiple Battery Combiner Boxes to accept more batteries in parallel.

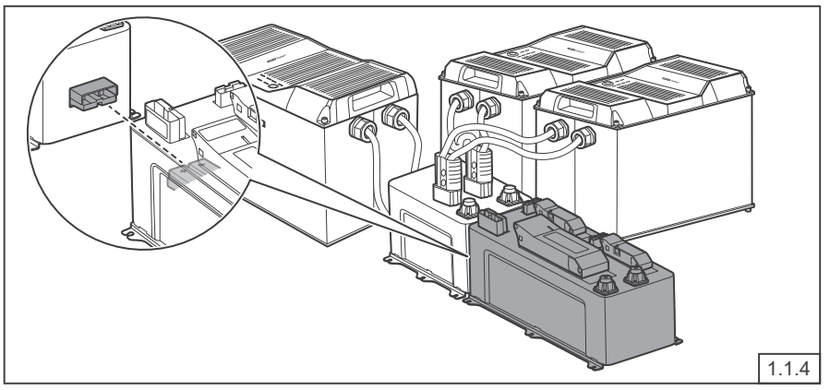

1.1.4

Connect the Battery Combiner Box and the System Combiner Box (sold separately) using the Anderson connectors on their sides.

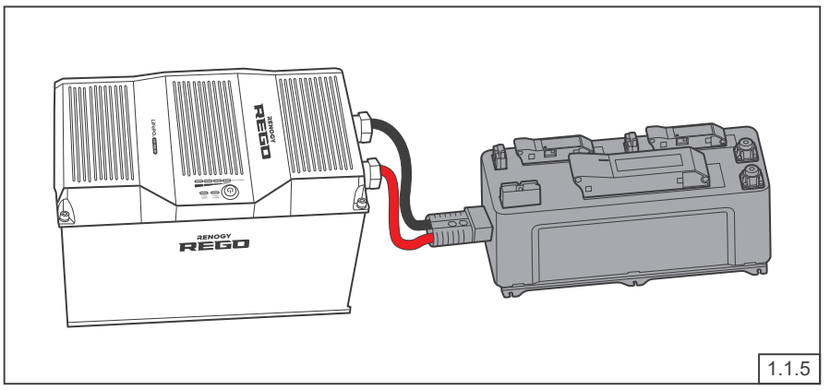

1.1.5

If only one battery is used, connect the battery directly to the Anderson connector on the side of the System Combiner Box.

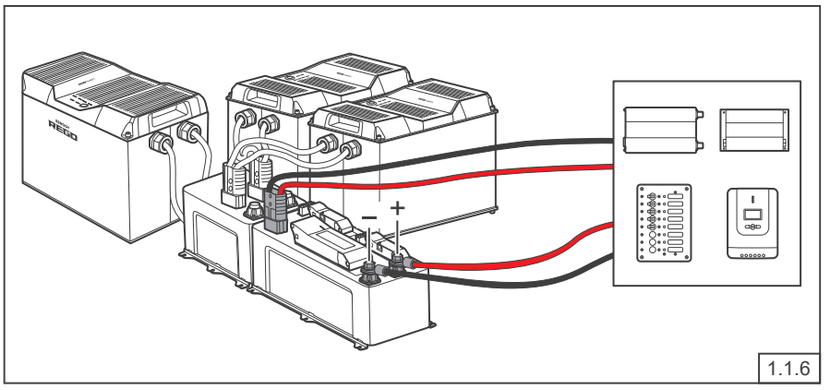

1.1.6

Connect the devices to the corresponding Anderson connectors or insert terminals on the top of the System Combiner Box. Refer to the user manual of REGO 4 Ports 400A System Combiner Box at renogy.com to confirm what devices the Anderson connectors respectively correspond to.

- If the devices are connected to the insert terminals of the System Combiner Box, please install appropriately sized fuses or circuit breakers in the branch circuits to protect connected devices and circuit wires.
- If the devices are connected to the Anderson connectors of the System Combiner Box, please install appropriately sized NH fuses (sold separately) in the System Combiner Box to protect connected devices and circuit wires.

Power Connection

Using Anderson Connector to Ring Terminal Adapter Cables

Recommended Accessories

Gray Anderson 350 Connector to Ring Terminal Adapter Cable	Positive/Negative Busbars
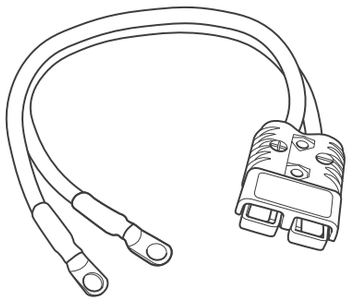	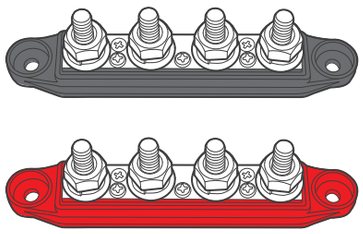

- Please ensure equal length of the Adapter Cables to make the batteries operate equally together.
- Please size the Busbars appropriately to handle the continuous charge and discharge current of the batteries.
- DO NOT short the positive and negative ring terminals of the Adapter Cable. Short circuits can damage the battery.

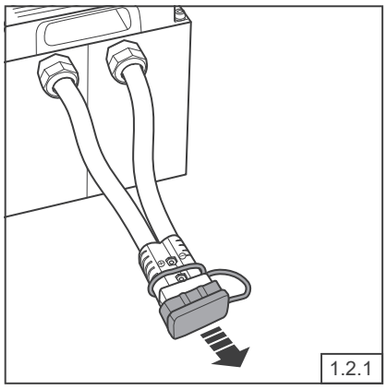

Remove the Dust Covers from the Anderson Connectors.

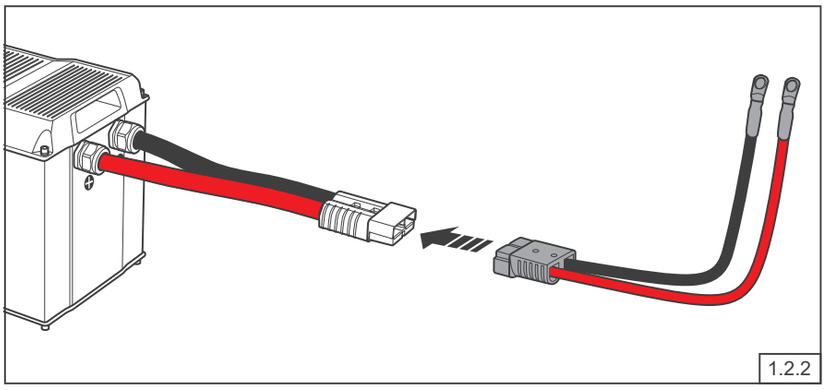

Connect the Anderson Connectors of the batteries to the Adapter Cables (sold separately).

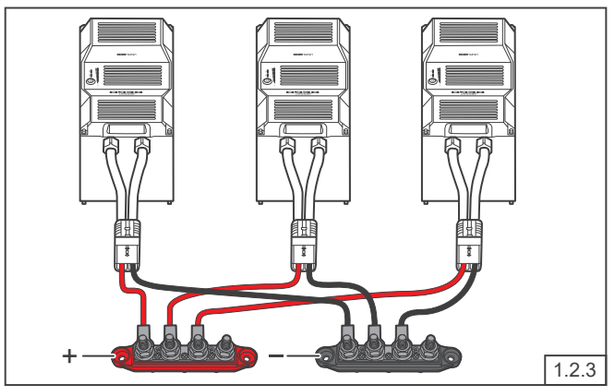

Connect the positive and negative ring terminals of the Adapter Cables to the Positive and Negative Busbars (not included) respectively.

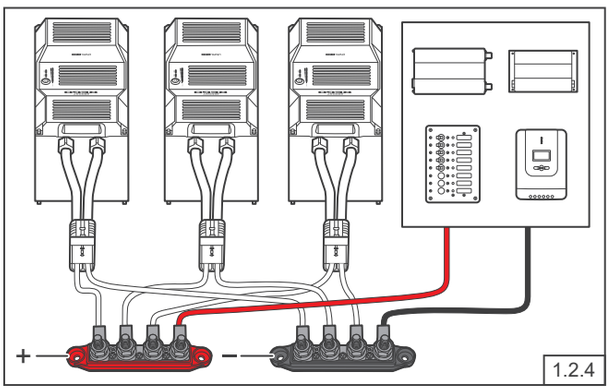

Connect the devices to the Positive and Negative Busbars.

- Please install appropriately sized fuses or circuit breakers in the branch circuits to protect connected devices and circuit wires.

Communication

The communication connection is optional. It allows the battery to communicate with other REGO devices and monitoring devices, enabling safe operation, smart control, remote monitoring, and programmable settings.

Inter-Device Communication

Depending on the installation condition, the RV-C communication connections between the battery and other REGO devices can be established with backbone or daisy chain topology. The inter-device communication allows the battery to dynamically adjust the charging profile for an optimal and safe charge.

Backbone Topology

If an RV-C bus is pre-installed in the RV, check the network wiring diagram provided by the RV manufacturer and follow the backbone topology for the RV-C communication connections. Refer to the user manual of the battery at renogy.com for more details.

Daisy Chain Topology

If the RV-C bus is not available, follow the daisy chain topology for the communication connections.

Recommended Accessories

LP16 Plug (7-Pin) Communication Cable	LP16 Terminator Plug (7-Pin)
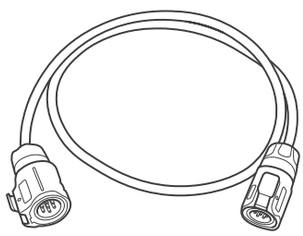	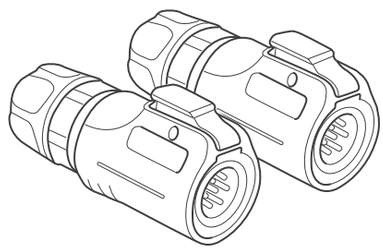

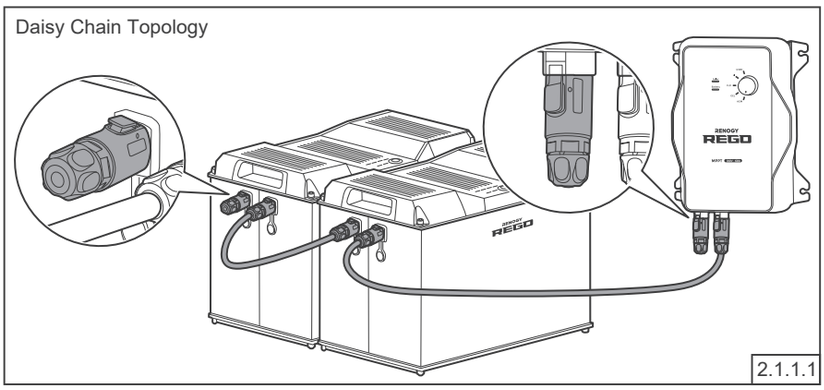

Connect the battery to other REGO devices in series through either of the CAN Communication Ports with the Communication Cables (sold separately).

Plug the Terminator Plug (sold separately) into the free CAN Communication Ports on the first and last REGO devices.

Communication

Monitoring Device Communication

Depending on the application, the short-range or long-range communication connections can be established between the battery and the monitoring devices. The monitoring device communication allows for the monitoring and programming of the battery or even the complete system.

- Please scan the QR code on the last page of the Quick Guide to download the DC Home app.
- Please make sure that the battery is turned on before the connection.

Short-Range Monitoring

If only short-range monitoring is required, connect the battery to the DC Home app directly through Bluetooth.

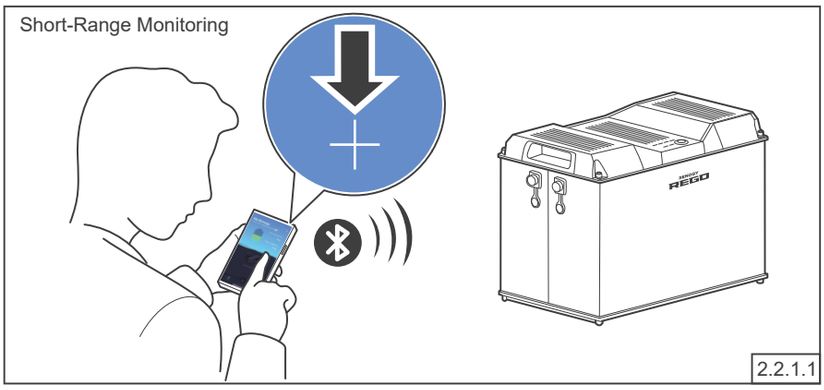

Click "+" to search for new devices. Add the newly found battery to the device list. Monitor the battery on the device page.

Long-Range Monitoring

If long-range communication and programming are required, connect the battery to Renogy Super Panel through Bluetooth or hard wire, and the Super Panel to the DC Home app through WiFi or cellular network.

- Please make sure that the Super Panel is powered on before the connection.
- Please read the user manual of Renogy Super Panel at renogy.com before the connection.

Recommended Accessories

Renogy Super Panel	LP16 Plug (7-Pin) to RJ45 Communication Adapter Cable
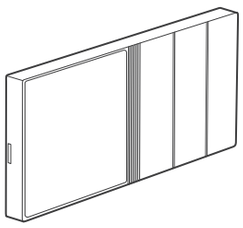	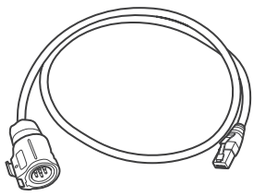

Communication

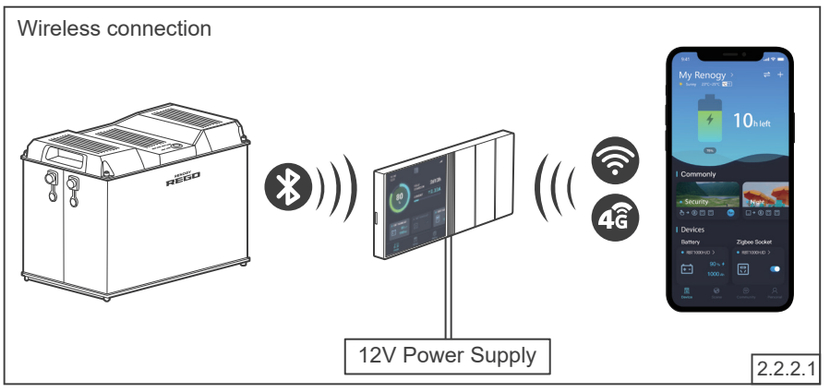

If the inter-device communication is not established, connect the battery to the Super Panel (sold separately) through Bluetooth, and the Super Panel to the DC Home app through WiFi or cellular network. Monitor the battery on the Super Panel or the DC Home app.

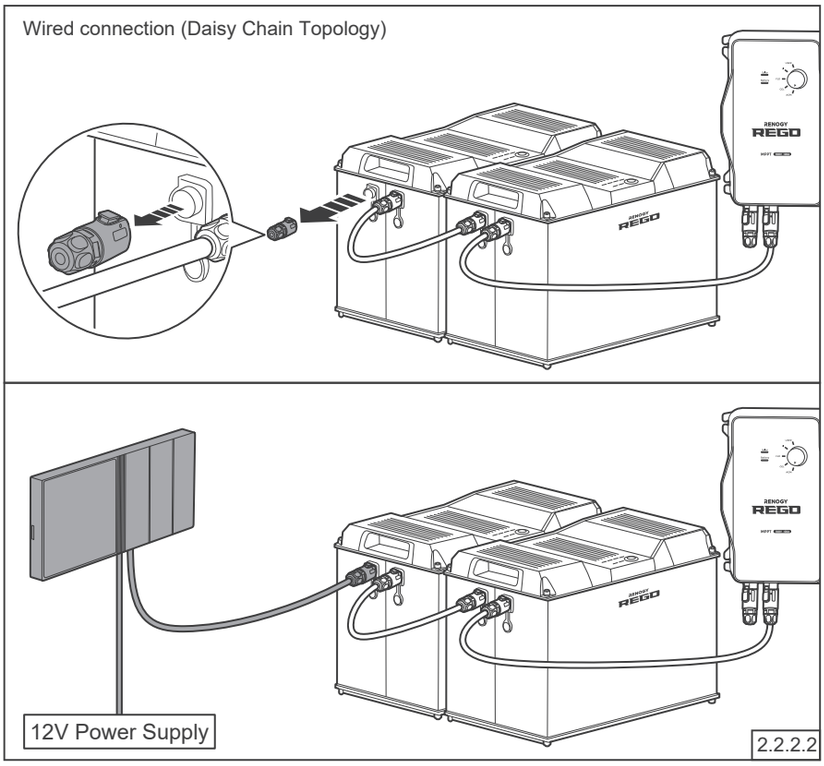

If the inter-device communication is established with the backbone topology, connect the Super Panel to the RV-C bus. Contact the RV manufacturer for more details before the connection.

If the inter-device communication is established with the daisy chain topology, remove the Terminator Plug from the REGO device at either end of the daisy chain and connect the Super Panel to the free CAN Communication Port on the REGO device with the Communication Adapter Cable (sold separately).

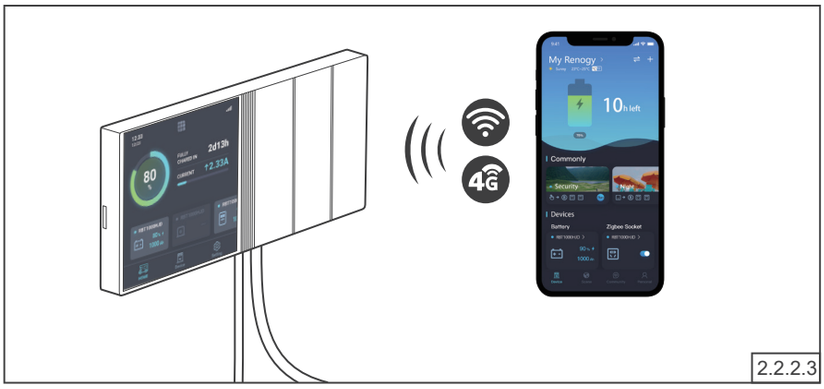

Connect the Super Panel to the DC Home app through WiFi or cellular network. Monitor and program the complete system on the Super Panel or the DC Home app.

Turning On

The battery is off when it leaves the factory. Please turn the battery on after connecting it to the system for the first time.

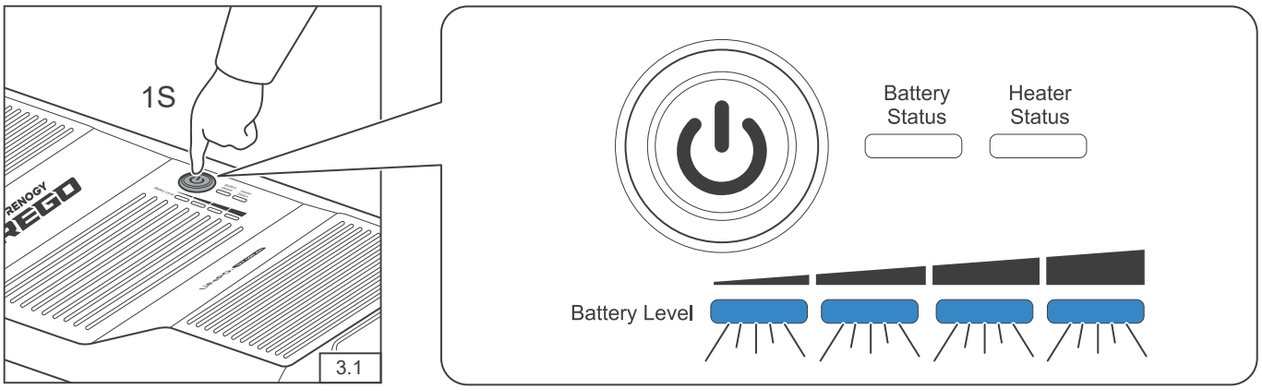

Long press the Power Button for 1 second or charge the battery to turn the battery on. The Battery Level Indicators fast flash blue simultaneously to indicate that the battery is turning on.

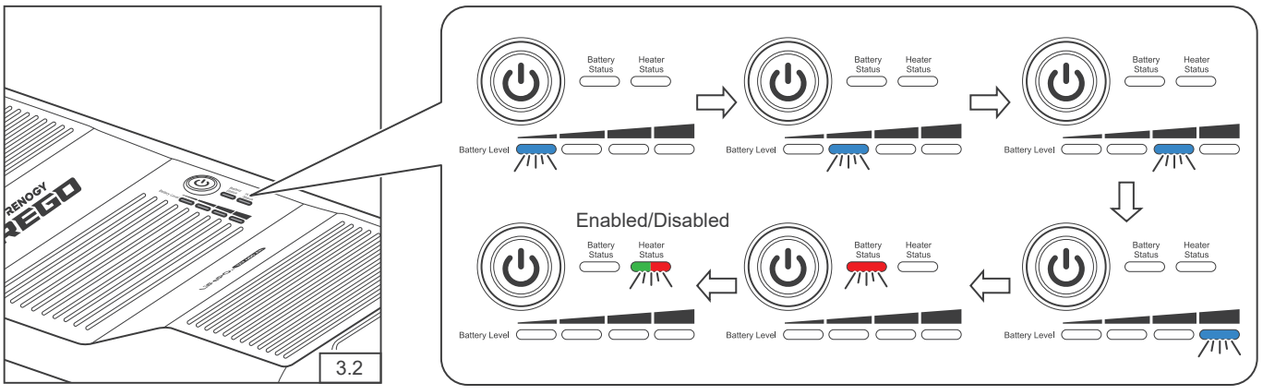

The Battery Level Indicators, Battery Status Indicator, and Heater Status Indicator flash in sequence once to indicate that the battery has been turned on. The color of the flashing Heater Status Indicator indicates the current heater setting.

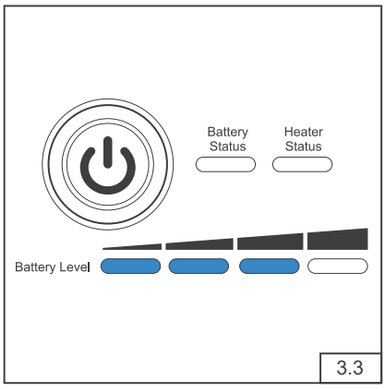

The Battery Level Indicators light up blue to indicate the current battery level.

- Please fully charge the battery prior to the first use.
- DO NOT turn the battery on until completing and securing the power connection. Connecting a turned on battery to the system can trigger the short circuit or overcurrent protection of the battery.
- To turn on the parallel connected batteries simultaneously, please long press the Power Button on any battery for 1 second or charge the batteries.
- If the battery is unable to be turned on with the Power Button or chargers, please refer to the user manual of the battery on renogy.com for troubleshooting instructions.

LED Indicators

Battery Level Indicators

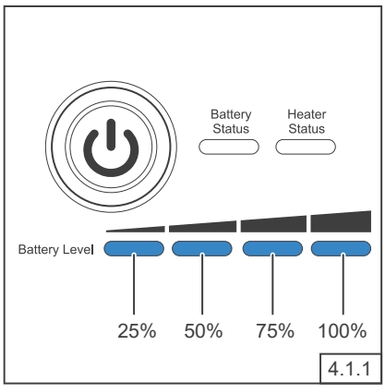

The 4 Battery Level Indicators respectively indicate 25%, 50%, 75%, and 100% battery level.

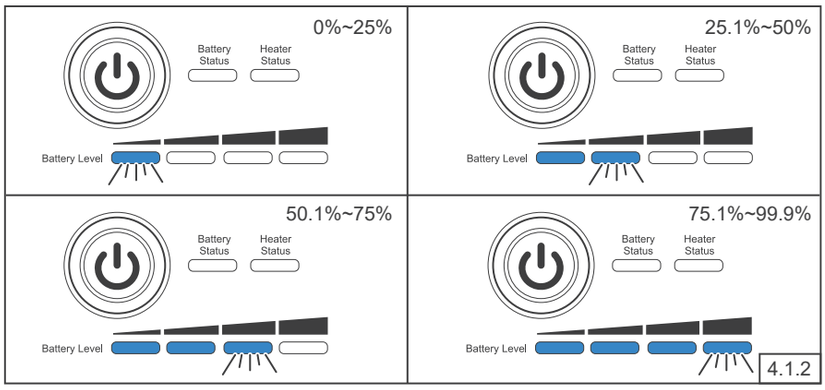

As the battery charges, the Battery Level Indicators light up blue one by one, and the rightmost Battery Level Indicator fast flashes blue to indicate the current battery level.

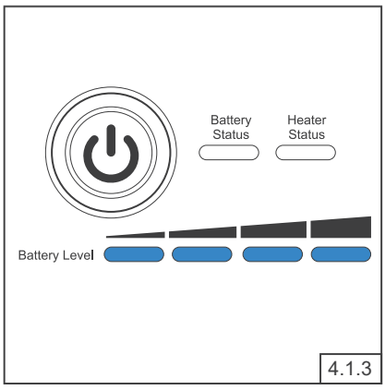

Once the battery is fully charged, all the Battery Level Indicators light up blue and remain solid.

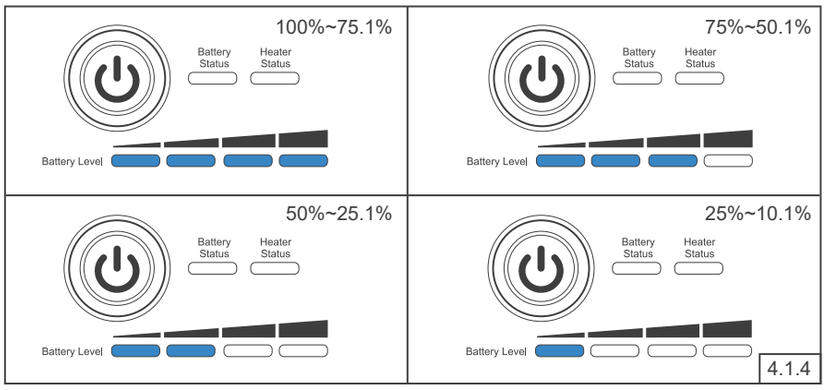

As the battery discharges, the Battery Level Indicators go out one by one.

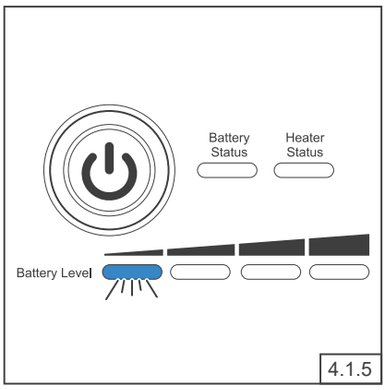

The last Battery Level Indicator slow flashes blue when the battery level drops below 10%. Please charge the battery immediately to prevent overdischarge.

- DO NOT overcharge/overdischarge the battery.
- Please charge the battery with the chargers (not included) that are compatible with the lithium iron phosphate battery and the charge voltage set at 14.4V.
- DO NOT overcharge/overdischarge the battery.
- DO NOT exceed the maximum charge/discharge current of the battery.
- DO NOT charge the battery at high temperatures above 131°F. If the heater is disabled or unable to operate properly, charging the battery at low temperatures below 32°F is NOT allowed as well.
- DO NOT discharge the battery at high temperatures above 140°F or low temperatures below -4°F.
- The Battery Level Indicators go out when the battery is in the heater setting mode or permanent failure mode.
- DO NOT connect high power loads to the battery when it is running low.

LED Indicators

Battery Status Indicator

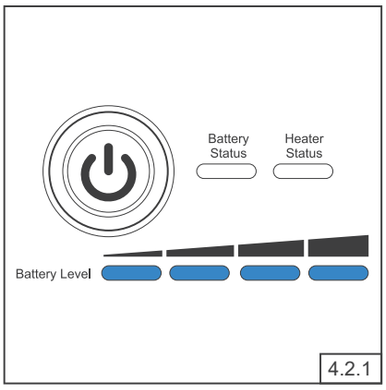

The Battery Status Indicator remain off when the battery is operating properly.

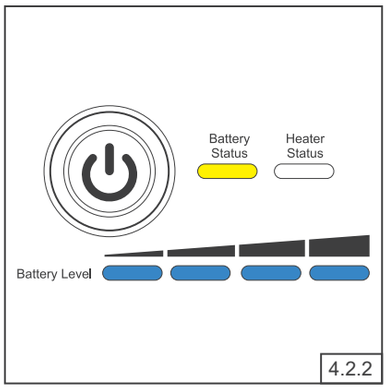

The Battery Status Indicator lights up/flashes yellow when the battery is in the warning mode.

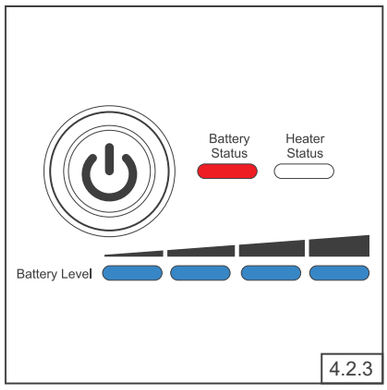

The Battery Status Indicator lights up/flashes red when the battery is in the protection mode.

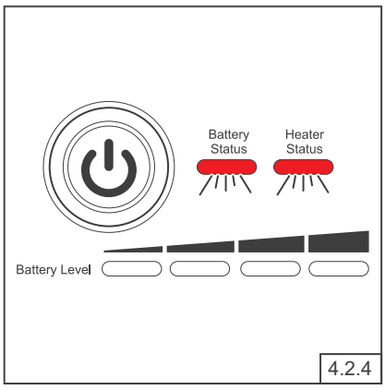

The Battery Status Indicator and Heater Status Indicator flashes red simultaneously when the battery is in the permanent failure mode.

- Please refer to the user manual of the battery on renogy.com for the lighting/flashing patterns of the Battery Status Indicator and Heater Status Indicator under different warnings, protections, and permanent failures.
- The warnings do not affect the normal operation of the battery, but it is recommended to pay closer attention to the battery to prevent triggering the protections.
- Please refer to the user manual of the battery for troubleshooting instructions if the protections are triggered.

LED Indicators

Heater Status Indicator

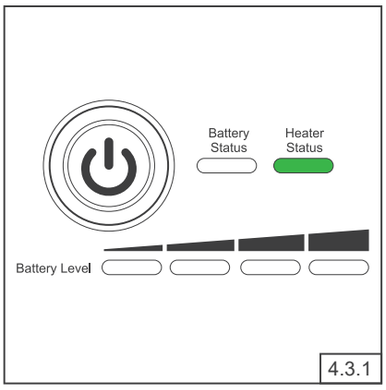

When the battery temperature drops below 41°F, and the charge current is stable and greater than 15A, the heater starts operating, and the Heater Status Indicator lights up green.

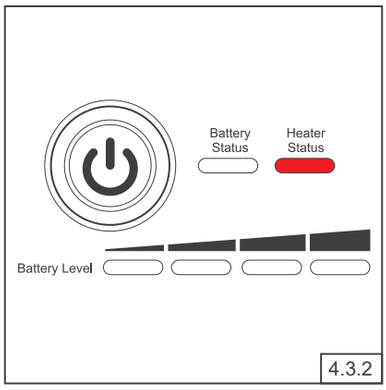

When the battery temperature drops below 41°F, but the charge current is unstable or less than 15A, or the heater malfunctions, the heater is unable to operate properly, and the Heater Status Indicator lights up red.

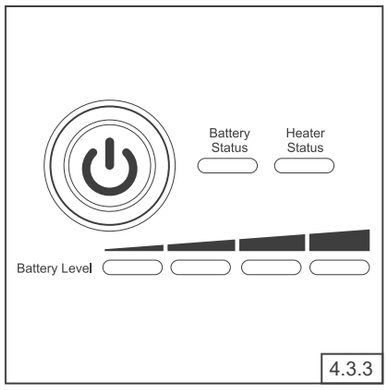

When the battery temperature rises above 50°F, or the charge current ceases, the heater stops operating and the Heater Status Indicator goes out.

- For parallel connected batteries, each battery requires a stable charge current greater than 15A for the proper operation of the heater.

Heater Settings

The battery leaves the factory with the heater enabled. The heater can be enabled or disabled with the Power Button

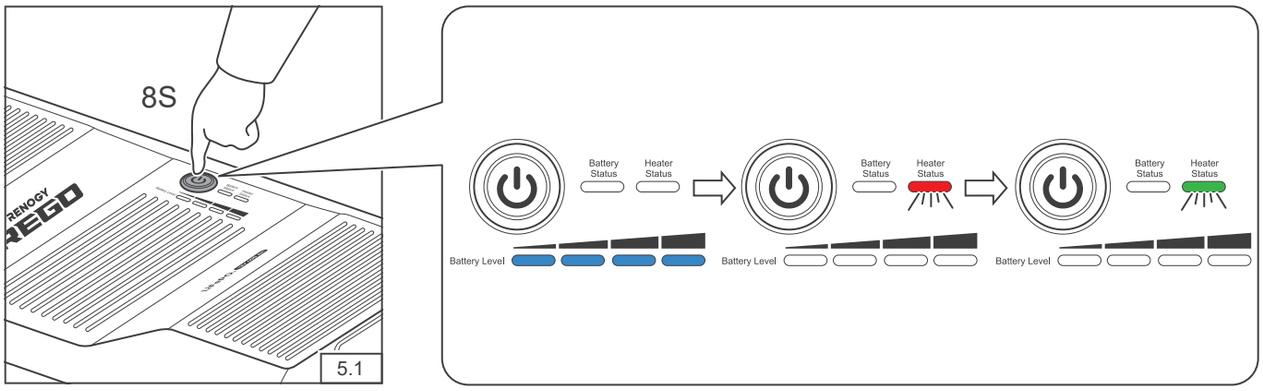

Long press the Power Button for 8 seconds to enter the heater setting mode. The Heater Status Indicator flashes red and green once.

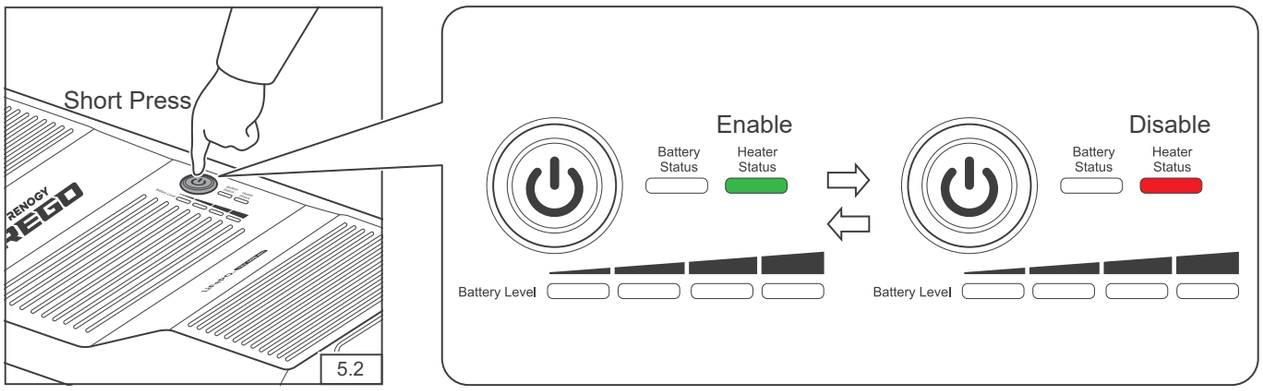

Short press the Power Button to enable or disable the heater. The Heater Status Indicator turns green to indicate that the heater is enabled or turns red to indicate that the heater is disabled.

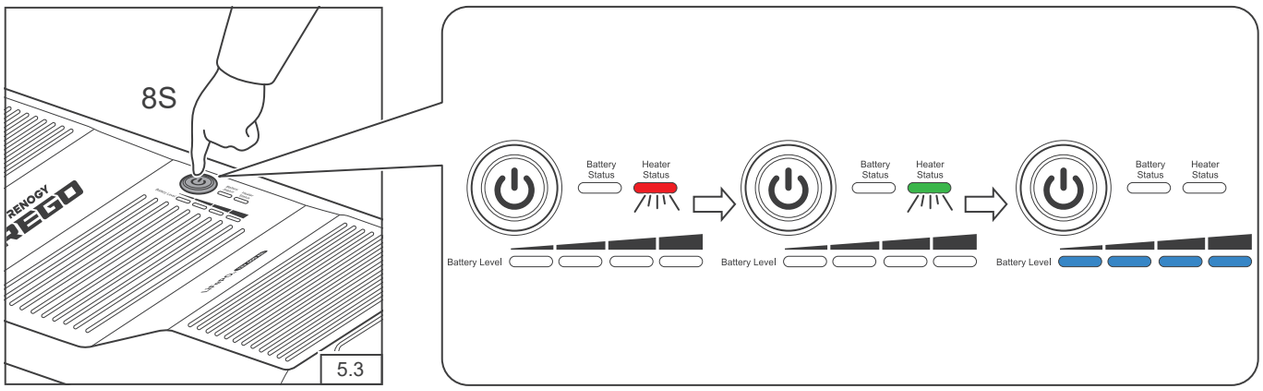

Long press the Power Button for 8 seconds to exit the heater setting mode and save the current setting. The Heater Status Indicator flashed red and green once.

Heater Settings

- To enable or disable the heaters of the parallel connected batteries simultaneously, please establish the communication connection and enable or disable the heater of any battery with the Power Button. If the communication connection is not established, please enable or disable the heater of each battery individually. The heater setting MUST be uniform across the batteries.
- The heater is unable to operate properly at low temperatures with PWM charge controllers or low current chargers. It is recommended to disable the heater to prevent it from turning on and off repeatedly and draining the battery.
- The battery automatically exits the heater setting mode and saves the current setting 10 minutes after entering the heater setting mode if it is not done manually.

Turning Off

Prior to long periods of storage, please disconnect the battery from the system and turn it off. With the low self-discharge rate when turned off, the battery can hold the charge for a long period of time.

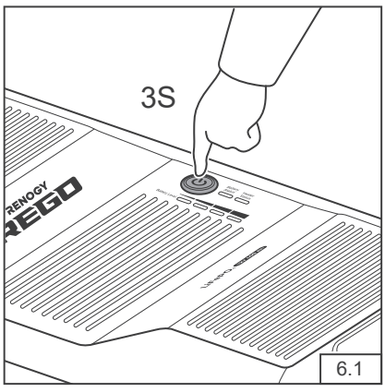

Long press the Power Button for 3 seconds

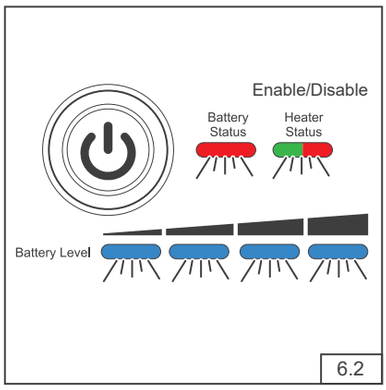

The Battery Level Indicators, Battery Status Indicator, and Heater Status Indicator fast flash simultaneously to indicate that the battery is turning off. The color of the flashing Heater Status Indicator indicates the current heater setting.

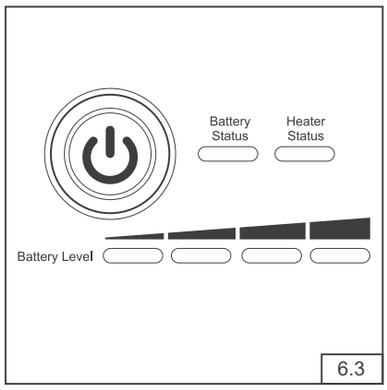

All the indicators go out to indicate that the battery has been turned off.

⚠

- The battery is unable to be turned off if the Battery Level Indicators, Battery Status Indicator, and Heater Status Indicator keep fast flashing. Please check if the battery has been disconnected from the system.
- To turn off the parallel connected batteries simultaneously, please establish the communication connection and long press the Power Button on any battery for 3 seconds. If the communication connection is not established, please disconnect parallel connected batteries and turn off each battery individually.

Maintenance

Inspection

Please perform regular inspections following the steps below.

- Examine the external appearance of the battery. The housing and connector contacts of the battery shall be clean, dry, and free of corrosion.
- Check the battery cables and connections. Replace any damaged cables and tighten any loose connections.

⚠

- In some applications, corrosion can form around the contacts internal to the Anderson Connector. The corrosion can cause loosening of spring retention force and increase of mated contact resistance, leading to premature failure of the connection. Please apply dielectric grease onto each connector contact at regular intervals. Dielectric grease can repel moisture and protect the connector contact against corrosion.

Cleaning

Please clean the battery at regular intervals following the steps below.

- Disconnect the battery from the system.
- Turn off the battery with the Power Button.
- Clean the battery housing and connector contacts with the damp cloth or non-metallic brush. The household cleaner can be used if the battery is extremely dirty.
- Dry the battery with the clean cloth. Keep the area around the battery clean and dry.
- Ensure the battery is completely dry before turning the battery back on and reconnect it to the system.

Storage

Please follow the tips below to ensure the battery emerges from the storage in a good condition.

- Charge the battery to 30%~50% and disconnect it from the system.
- Turn the battery off with the Power Button.
- Handle the battery carefully to to avoid sharp impacts or extreme pressure on the battery housing.
- Store the battery in a well ventilated, dry, clean area with temperatures between -4°F and 113°F.
- Turn on the battery and check the battery voltage every 3 months. Charge the battery immediately if the battery voltage is low.
- Fully charge the battery when it is taken out of the storage.

⚠

- DO NOT expose the battery to extreme temperatures above 140°F.
- DO NOT expose the battery to heat sources.
- DO NOT expose the battery to direct sunlight, moisture, or precipitation.

FCC Statement

This device complies with Part 15 of the FCC Rules. Operation is subject to the following two conditions:

(1) This device may not cause harmful interference, and

(2) This device must accept any interference received, including interference that may cause undesired operation.

Any changes or modifications not expressly approved by the party responsible for compliance could void the user's authority to operate the equipment.

This equipment has been tested and found to comply with the limits for a Class B digital device, pursuant to Part 15 of the FCC Rules. These limits are designed to provide reasonable protection against harmful interference in a residential installation. This equipment generates uses and can radiate radio frequency energy and, if not installed and used in accordance with the instructions, may cause harmful interference to radio communications. However, there is no guarantee that interference will not occur in a particular installation. If this equipment does cause harmful interference to radio or television reception, which can be determined by turning the equipment off and on, the user is encouraged to try to correct the interference by one or more of the following measures:

(1) Orient or relocate the receiving antenna.

(2) Increase the separation between the equipment and receiver.

(3) Connect the equipment into an outlet on a circuit different from that to which the receiver is connected.

(4) Consult the dealer or an experienced radio/TV technician for help.

FCC Radiation Exposure Statement

This equipment complies with FCC radiation exposure limits set forth for an uncontrolled environment. This equipment should be installed and operated with minimum distance 20cm between the radiator & your body.

Renogy Empowered

Renogy aims to empower people around the world through education and distribution of DIY-friendly renewable energy solutions.

We intend to be a driving force for sustainable living and energy independence.

In support of this effort, our range of solar products makes it possible for you to minimize your carbon footprint by reducing the need for grid power.

Live Sustainably with Renogy

Did you know? In a given month, a 1KW solar energy system will...

- Save 170 pounds of coal from being burned
- Save 300 pounds of CO_2 from being released into the atmosphere
- Save 105 gallons of water from being consumed

Renogy Power PLUS

Renogy Power Plus allows you to stay in the loop with upcoming solar energy innovations, share your experiences with your solar energy journey, and connect with like-minded people who are changing the world in the Renogy Power Plus community.

Also, follow us on Social Media @RenogySolar.

RENOGY.COM

Visit renogy.com to find the User Manual or get more support via "Contact Us".
Renogy reserves the right to change the contents of this manual without notice.

Your voice matters! Scan the QR code to submit your feedback on the product.

Welcome to join Renogy Power PLUS Community by scanning the QR code to install DC Home App. Find your e-warranty here, and more.